75.1 ŚRUBA HAKOWA

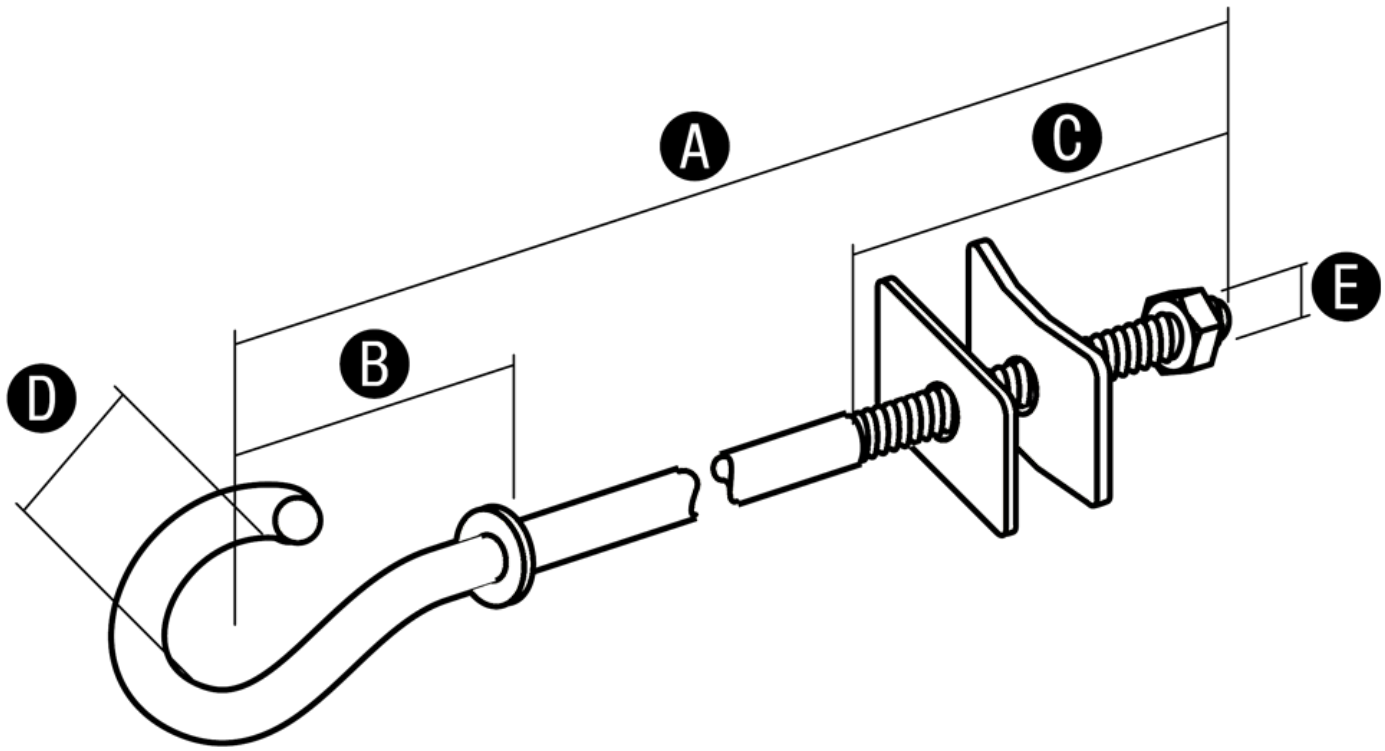

Służy do wykonywania naciągów izolowanych linii napowietrznych.

	Wymiary				
	A	**B**	**C**	**D**	**E**
75.1	110	80	80	40	M16
75.2	150	80	80	40	M16
75.3	215	80	80	40	M16
75.4	255	80	80	40	M16
75.5	300	80	80	40	M16
75.6	360	80	80	40	M16
75.7	420	80	80	40	M16
75.8	500	80	80	40	M16
75.9	550	80	80	40	M16
75.10	600	80	80	40	M16
75.11	110	80	80	40	M20
75.12	160	80	80	40	M20

75.13	220	80	80	40	M20
75.14	250	80	80	40	M20
75.15	320	80	80	40	M16
75.16	340	80	80	40	M20
75.17	370	80	80	40	M20
75.18	510	80	80	40	M20

Wersja materiałowa

	Ocynkowane
75.1	75.1 OC
75.2	75.2 OC
75.3	75.3 OC
75.4	75.4 OC
75.5	75.5 OC
75.6	75.6 OC
75.7	75.7 OC
75.8	75.8 OC
75.9	75.9 OC
75.10	75.10 OC
75.11	75.11 OC
75.12	75.12 OC
75.13	75.13 OC
75.14	75.14 OC
75.15	
75.16	75.16 OC
75.17	75.17 OC
75.18	75.18 OC