Product Data Sheet: Equipotential Busbars K12 with Snap-on Terminals

PAS 11AK (563 200)



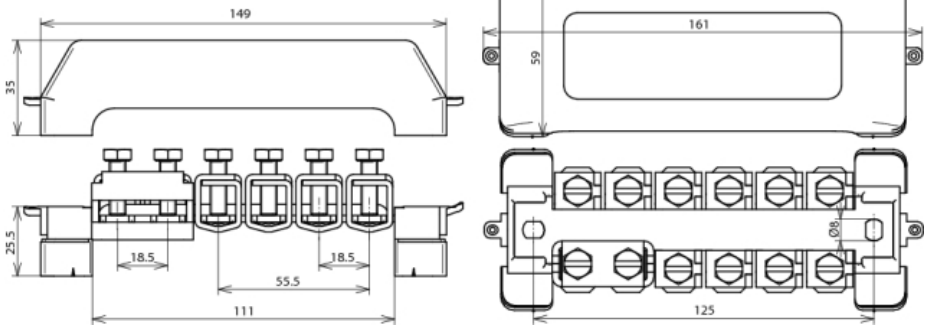

Figure without obligation

Part No.	563 200
Connection (solid / stranded)	10 x 2.5-95 mm^2
Connection Rd	or 10 x -10 mm
Connection Fl	1 x -30x4 mm
Contact bar	Cu/gal Sn
Cross section	30 mm^2
Fixing	[2x] 6x8 mm
Fixing frames	P (grey)
Cover	P (grey/sealable)
Standard	EN 50164-1
Type	halogen-free
Weight	410 g
Customs tariff number	85389099
GTIN	4013364056558
PU	1 pc(s)

We reserve the right to introduce changes in performance, configuration and technology, dimensions, weights and materials in the course of technical progress. The figures are shown without obligation.