Harmony™ control stations and enclosures

Catalog
2011



Schneider Electric™

Contents

Harmony™ control stations and enclosures

Selection guide 4

Introduction 6

XAL 22 mm control stations:

Components. 7

Specifications 8

References 10

Dimensions 12

XAP 22 mm enclosures:

Components. 14

Specifications 15

References 16

Dimensions 16

9001B standard duty control stations:

References 20

Dimensions 22

9001KY/SKY 30 mm control stations:

Components. 24

References 25

Dimensions 27

Index 28

Harmony™ control stations and enclosures

Family	XAL	XAP
	 *XALD02*	 *XAPA1100*  *XAPA1104*
Type of Product/Material	**XALD** – Polycarbonate **XALK** – Polycarbonate	**XAPA** – glass filled polyester **XAPG** – die cast zinc **XAPE** – anodized aluminum
Number of holes	1 to 3	0 to 16
Type of Operators	XB5 (22mm)	XB5 (22mm)
Available without Operators	Yes	Yes
Available with Operators	Yes	No
Approvals	UL File E164353 CCN NKCR CSA File LR 44087 Class 3211-03	UL File E164353 CCN NKCR CSA File LR 44087 Class 3211-03
Conforming to Standards	CE Marked EN/IEC 60947-1, EN/IEC 60947-5-1, EN/IEC 60947-5-4, JIS C 4520 UL 508 CSA C22.2 No.14	CE Marked EN/IEC 60947-1, EN/IEC 60947-5-1, EN/IEC 60947-5-4, JIS C 4520 UL 508 CSA C22.2 No.14
Cable Entry	No. 13 knock out	**XAPA** – undrilled **XAPG** – Tapped 3/4NPT **XAPE** – flush mount (n/a) **XAPE** – fiber pull box
Page	7	14

Family	9001B	9001KY/SKY
	 *NEMA 1 Surface Mounting 9001BG••*	 *NEMA 1 Flush Mounting 9001BF••*
	 *NEMA 4 9001BW••*	 *NEMA 7 and 9 9001BR••*
		 *9001KYSS3*
		 *9001KY3*
		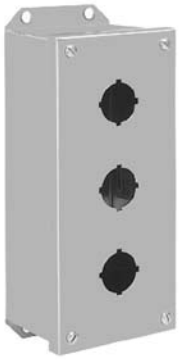 *9001KYAF3*
		 *9001SKY2*
Type of Product/Material	**9001BG** – plastic cover **9001BF** – stainless steel **9001BW** – die cast zinc **9001BR** – cast aluminum	**KYAF** – sheet steel **KYSS** – stainless steel **KY** – die cast zinc **SKY** – plastic
Number of holes	1 to 3	1 to 6
Type of Operators	Built in	9001K/SK (30mm)
Available without Operators	No	Yes
Available with Operators	Yes	Yes
Approvals	UL File E78403 CCN NKCR CSA File LR 25490 Class 3211-03	UL File E78403 CCN NKCR CSA File LR 25490 Class 3211-03
Conforming to Standards	CE Marked EN/IEC 60947-1, EN/IEC 60947-5-1, EN/IEC 60947-5-4, JIS C 4520 UL 508 CSA C22.2 No.14	CE Marked EN/IEC 60947-1, EN/IEC 60947-5-1, EN/IEC 60947-5-4, JIS C 4520 UL 508 CSA C22.2 No.14
Cable Entry	**9001BG** – 1/2" and 3/4" knockouts **9001BF** – none **9001BW** – 1/2 - 14 NPT **9001BR** – 1/2 - 14 NPT	**9001KYAF** – undrilled **9001KYSS** – 3/4 - 14 NPT **9001KY** – 3/4 -14 NPT **9001SKY** – 3/4 - 14 NPT
Page	20	24

Harmony™ control stations and enclosures



Introduction

XAL 22 mm polycarbonate control stations

XAL enclosures are available as empty enclosures with 22 mm diameter holes or as control stations with installed XB5 plastic operators.

XAP 22 mm empty enclosures

XAPA glass-reinforced polyester enclosures, XAPG die-cast zinc enclosures, and XAPE anodized aluminum flush mount enclosures are available with or without 22 mm holes for use with XB4 metal and XB5 plastic operators.

9001B standard duty control stations

9001B control stations are fully assembled units with one, two or three product-specific operators. Various enclosure options include NEMA 1, flush plate, NEMA 4, and NEMA 7/9.

9001KY/SKY control stations

9001KY and 9001SKY enclosures are available as empty enclosures with 30 mm diameter holes or as control stations with installed 9001K or 9001SK operators.

Harmony™ control stations and enclosures

XAL 22 mm control stations

Components

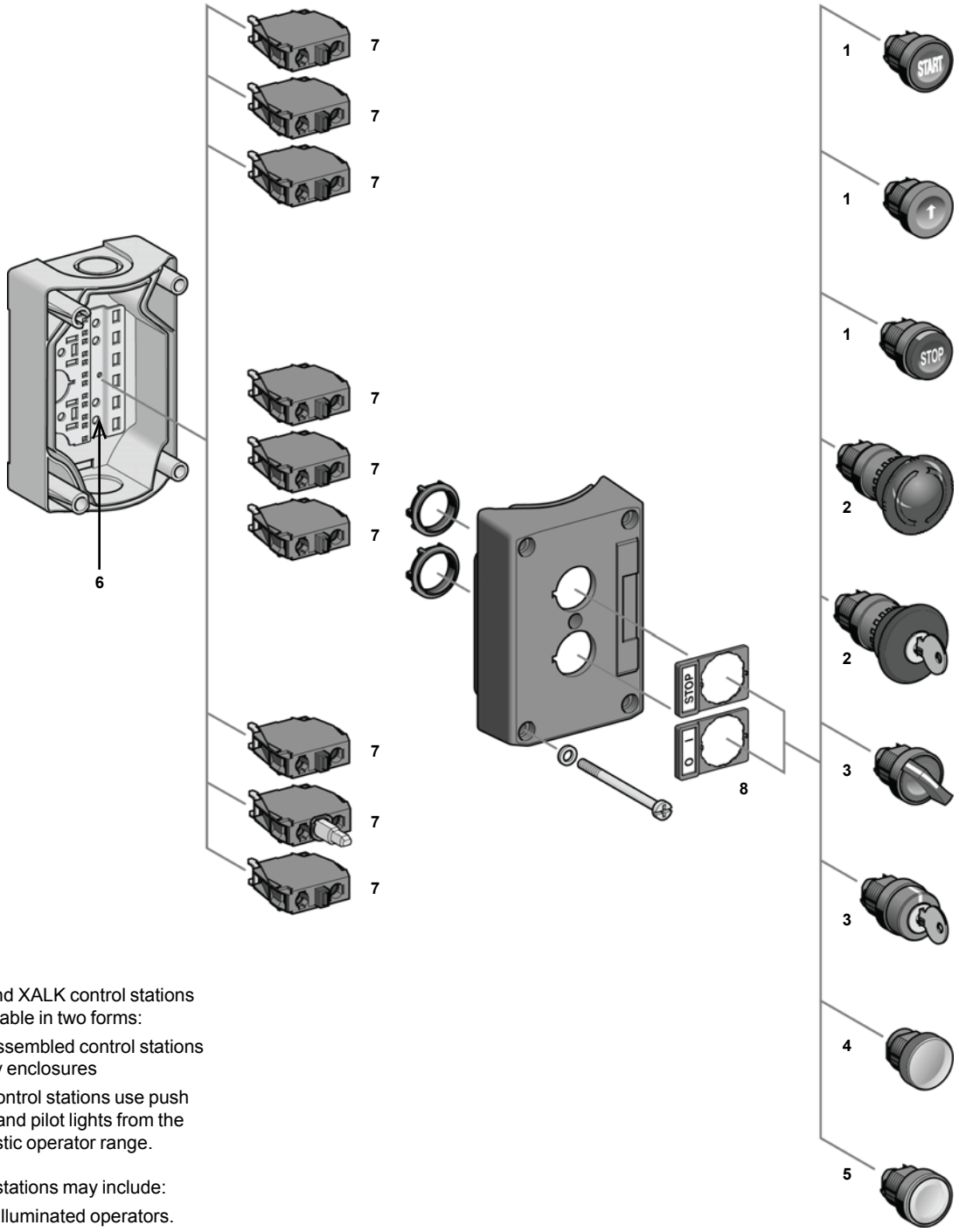

XALD and XALK control stations are available in two forms:

- Pre-assembled control stations
- Empty enclosures

These control stations use push buttons and pilot lights from the XB5 plastic operator range.

Control stations may include:

1 - Non-illuminated operators.
2 - Mushroom head operators.
3 - Selector switches.
4 - Pilot lights.
5 - Illuminated operators.
6 - Base of enclosure (with mounting plate).
7 - Contact block and light module combinations.
8 - Legends.

Harmony™ control stations and enclosures

XAL 22 mm control stations

Environmental Specifications

Protective treatment standard version		"TH"
Ambient air temperature around the device	Storage	-40 to +158 °F (- 40 to +70 °C)
	Operation	-13 to +158 °F (- 25 to +70 °C) unless otherwise stated
Electric shock protection	Conforming to IEC 60536	Class II
Degree of protection	Conforming to IEC 60529	IP 65, unless otherwise stated IP 66, for booted push button heads
	Conforming to UL 50, CSA C22.2 No. 94	Type 1, 4X, 12, and 13, unless otherwise stated
Resistance to high pressure cleaner		1,015 psi (70 x 10^5 Pa-70 bars); distance: 3.94 in (0.1 m) Temperature: 131 °F (55 °C)
Mechanical shock protection	Conforming to EN 50102	Non-illuminated heads: IK 03
		Illuminated heads: IK 05
Conforming to standards	CE Marked	IEC 60947-1, IEC/EN 60947-5-1, IEC 60947-5-4, EN 60947-1, JIS C 4520, UL 508, CSA C22.2 No. 14
Product certifications	UL Listed, CSA Certified UL File E164353 CCN NKCR CSA File LR 44087 Class 3211 03	Standard single contacts with screw clamp terminals: A600; R300 Light blocks with screw clamp terminals
Terminal identification	Conforming to EN 50005 and EN 50013	
Material and colors		XALD: polycarbonate, light grey RAL 7035 and dark grey RAL 7016 XALK: polycarbonate, light grey RAL 7035 and yellow RAL 1012
Cable entries		Cable entries: 'knock-outs' for No. 13 (CM 12, PG 13.5) cable glands and tapped ISO 20
Cover Screws		Stainless steel, tightening torque 2 Nm (18 lb-in)

Contact Block Specifications – ZENL••

Mechanical Specifications

Contact operation	N/C or N/O		Slow break
Positive operation	Conforming to IEC/EN 60947-5-1 Appendix K		All functions incorporating a N/C contact are positive opening operation
Operating travel (to change electrical state)	Push button		Changing N/C state: 0.06 in (1.5 mm) Changing N/O state: 0.11 in (2.6 mm) Total travel: 0.17 in (4.3 mm)
Operating force	Push button		Changing N/C state: 0.79 lbf (3.5 N) Changing N/O state: 0.85 lbf (3.8 N)
	Additional contact only		Single N/C contact: 0.45 lbf (2 N) Single N/O contact: 0.52 lbf (2.3 N)
	Emergency stop with N/C + N/O		Standard push-pull: 10.12 lbf (45 N) Trigger action push-pull: 11.24 lbf (50 N)
			Standard turn to release and key release: 8.99 lbf (40 N) Trigger action turn to release and key release: 9.89 lbf (44 N)
Operating torque (to change electrical state)	Selector switches		N/O contact: 1.24 lb-in (0.14 N•m)
	Additional contact only		N/O contact: 0.44 lb-in (0.05 N•m)
Mechanical durability (in operating cycles)	Push button	Momentary	5 million
	Selector switches	Non-illuminated	3 million
		Illuminated	1 million
	Toggle switches		500,000
	Emergency stop push button		100,000
Vibration resistance	Conforming to IEC 60068-2-6		Frequency (2 to 500 Hz): 5 gn
Shock resistance	Conforming to IEC 60068-2-27		All functions except mushroom head push buttons– Half sine wave acceleration 11 ms: 50 gn Half sine wave acceleration 18 ms: 30 gn
			Mushroom head push buttons– Half sine wave acceleration 11 ms: 10 gn

Components: page 7 References: page 10 Dimensions: page 12

Contact Block Specifications – ZENL•• (continued)

Electrical Specifications

Cabling capacity	Conforming to IEC 60947-1	Screw and captive clamp terminals Min: 1 x 24 AWG (0.22 mm^2) without cable end 1 x 22 AWG (0.34 mm^2) for linking Max: 2 x 16 AWG (1.5 mm^2) with cable end Cross headed screw (Pozidrive type 1) slotted for flat 4 and 5.5 mm screwdriver Typical torque: 0.8 N•m (8.55 lb-in) Maximum torque: 1.2 N•m (10.7 lb-in)		
Contact material		Silver alloy (Ag/Ni)		
Short-circuit protection	Conforming to IEC/EN 60947-5-1	Standard blocks with screw clamp terminals: 10 A (gG cartridge fuse conforming to IEC 60269-1)		
Rated insulation voltage	Conforming to IEC 60947-1	Standard blocks with screw clamp terminals: Ui = 600 V, degree of pollution 3		
Rated impulse withstand voltage	Conforming to IEC 60947-1	Standard block with screw clamp terminals: Uimp = 6 kV		
Rated operational specifications Conforming to IEC/EN 60947-5-1	AC supply: Utilization category AC-15	A600: Ue = 600 Vac and Ie = 1.2 A or Ue = 240 Vac and Ie = 3 A or Ue = 120 Vac and Ie = 6 A		
	DC supply: Utilization category DC-13	R300: Ue = 250 Vdc and Ie = 0.1 A or Ue = 125 Vdc and Ie = 0.22 A		
Electrical durability Conforming to IEC/EN 60947-5-1 Appendix C Operating rate 3600 operating cycles/ hour. Load factor: 0.5	AC supply for 1 million operating cycles, utilization category AC-15	24 Vac	120 Vac	230 Vac
		4 A	3 A	2 A
	DC supply for 1 million operating cycles, utilization category DC-13	24 Vdc	110 Vdc	
		0.4 A	0.15 A	
Electrical reliability	Failure rate Conforming to IEC 947-5-4	Standard blocks: - at 17 V and 5 mA, $\lambda < 10^{-8}$ - at 5 V and 1 mA, $\lambda < 10^{-6}$		

Light Module Specifications– ZALV●●

Mechanical Specifications

Vibration resistance	Conforming to IEC 60068-2-6	Frequency (2 to 500 Hz): 15 gn
Shock resistance	Conforming to IEC 60068-2-27	Half sine wave acceleration 11 ms: 50 gn Half sine wave acceleration 18 ms: 30 gn

Electrical Specifications

Cabling capacity	Conforming to IEC 60947-1	Screw and captive clamp terminals Min: 1 x 24 AWG (0.22 mm^2) without cable end 1 x 22 AWG (0.34 mm^2) for linking Max: 2 x 16 AWG (1.5 mm^2) with cable end Cross headed screw (Pozidrive type 1) slotted for flat 4 and 5.5 mm screwdriver Typical torque: 0.8 N•m (8.55 lb-in) Maximum torque: 1.2 N•m (10.7 lb-in)
Rated insulation voltage	Conforming to IEC 60947-1	Pilot light blocks with protected LED: Ui = 250 V, degree of pollution 3
Rated impulse withstand voltage	Conforming to IEC 60947-1	Pilot light blocks with protected LED: Uimp = 4 kV
Voltage limits	Nominal voltage	24 V: 21.6 to 24.6 Vac; 19.2 to 30 Vdc 120V: 102 to 132 Vac 240V: 195 to 264 Vac
Current consumption	Applicable to all colors	24 Vac/Vdc supply blocks: 18 mA 120 Vac supply blocks: 14 mA 240 Vac supply blocks: 14 mA
Service life	At nominal voltage and at an ambient temperature of 77 °F (25 °C)	100,000 hours
Surge withstand	Conforming to IEC 61000-4-5	2/1 kV
Resistance to fast transients	Conforming to IEC 61000-4-4	2 kV
Resistance to electromagnetic fields	Conforming to IEC 61000-4-3	10 V/m
Resistance to electrostatic discharges	Conforming to IEC 61000-4-2	8/6 kV
Electromagnetic emission	Conforming to EN 55011	Class B

Harmony™ control stations and enclosures

XAL 22 mm control stations



XALD101

Start or Stop Function
Polycarbonate; Light gray base, RAL7035; Dark gray lid, RAL7016

Description	Type of Push	Type of Contact N.O.	N.C.	Marking	Reference
Marking on Legend Holder					
1 momentary push button	Flush black	1	—	Start	**XALD101**
	Flush red	—	1	Stop	**XALD111**
Marking on Legend Holder					
1 mushroom head push button 40 mm, momentary	Red	—	1	Emergency stop on red legend	**XALD164**



XALK174

Emergency Stop or Emergency Off Function
Polycarbonate; Light gray base, RAL7035; Yellow lid, RAL1012

Description	Type	Type of Contact N.O.	N.C.	Reference
1 mushroom head push button 40 mm, red Turn-to-release	Standard *(1)*	—	1	**XALK174**
	Trigger action *(2)*	—	1	**XALK178**
1 mushroom head push button 40 mm, red Key release (Key No. 455)	Standard *(1)*	—	1	**XALK184**
	Trigger action *(2)*	—	1	**XALK188**
1 mushroom head push button 40 mm, red Push-pull	Standard *(1)*	—	1	**XALK194**

(1) Emergency Off (IEC 60364-5-53)
(2) Emergency Stop (EN / IEC 13850)



XALD211

Start-Stop Function
Polycarbonate; Light gray base, RAL7035; Dark gray lid, RAL7016

Description	Type of Push	Type of Contact N.O.	N.C.	Text	Reference
2 momentary push buttons	1 flush black	1	—	Start	**XALD211**
	1 flush red	—	1	Stop	
	1 flush black	1	—	Forward	**XALD221**
	1 flush black	1	—	Reverse	



XALD321

Three Function
Polycarbonate; Light gray base, RAL7035; Dark gray lid, RAL7016

Description	Type of Push	Type of Contact N.O.	N.C.	Text	Reference
3 momentary push buttons (no markings)	1 flush black 1 flush red 1 flush black	1	—	Open	**XALD341**
		—	1	Stop	
		1	—	Close	
		1	—	Forward	**XALD311**
		—	1	Stop	
		1	—	Reverse	
		1	—	Up	**XALD321**
		—	1	Stop	
		1	—	Down	

Harmony™ control stations and enclosures

XAL 22 mm control stations



XALD02

Empty Enclosures – Polycarbonate (for use with XB5 plastic push buttons, pilot lights, selector switches, mushroom head operators, legend plates and accessories)

Description	Number of Holes	Reference
For normal environments, CSA approved and UL Listed (with stainless steel lid mounting screws)		
Light gray base RAL7035 Dark gray lid RAL7016	1	**XALD01**
	2	**XALD02**
	3	**XALD03**
	4	**XALD04**
	5	**XALD05**
Light gray base RAL7035, Yellow lid RAL1012	1	**XALK01**



ZENL1111



ZALV••

Electrical Block and Accessories (for mounting on metal plate at back of enclosure)

Description	Type	Color	Reference
Electrical blocks with screw clamp terminal connections			
Metal-plate-mounting contact blocks	N.O. contact	—	**ZENL1111**
	N.C. contact	—	**ZENL1121**
Light blocks with Protected LED	24 Vac/Vdc	White	**ZALVB1**
		Green	**ZALVB3**
		Red	**ZALVB4**
		Yellow	**ZALVB5**
		Blue	**ZALVB6**
	120 Vac	White	**ZALVG1**
		Green	**ZALVG3**
		Red	**ZALVG4**
		Yellow	**ZALVG5**
		Blue	**ZALVG6**
	230 Vac	White	**ZALVM1**
		Green	**ZALVM3**
		Red	**ZALVM4**
		Yellow	**ZALVM5**
		Blue	**ZALVM6**



ZB5SZ3

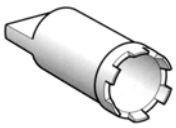

ZB5AZ905

Accessories

Description	Application	Reference
Plastic blanking plug, round-shape *(must order mounting nut ZB5AZ901)*	XALD●● enclosures	**ZB5SZ3**
Plastic blanking plug, square-shape *(must order mounting nut ZB5AZ901)*	XALD●● enclosures	**ZB5SZ5**
Mounting nut	ZB5SZ● blanking plug	**ZB5AZ901**
Grounding terminal	XALD●● enclosures	**XALZ09**
Tightening tool	Tightening head mounting nut ZB5AZ901	**ZB5AZ905**

Components: page 7 | Specifications: page 8 | Dimensions: page 12

Harmony™ control stations and enclosures

XAL 22 mm control stations

Dimensions

Single-way control stations XALD1••, K1••, D01

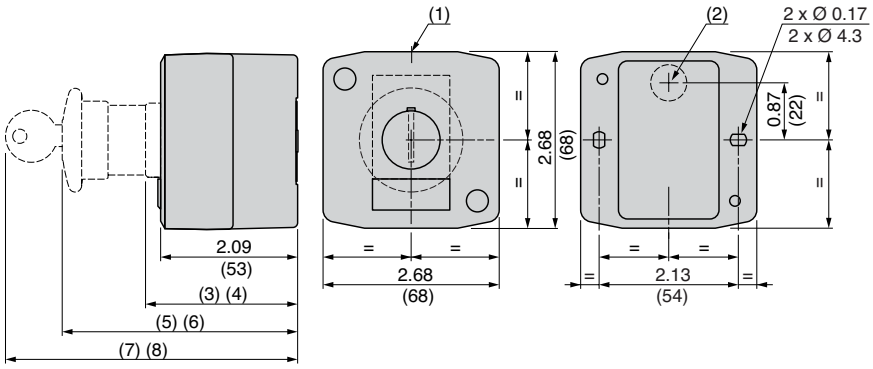

Two-way control stations XALD2••, K2••, D02

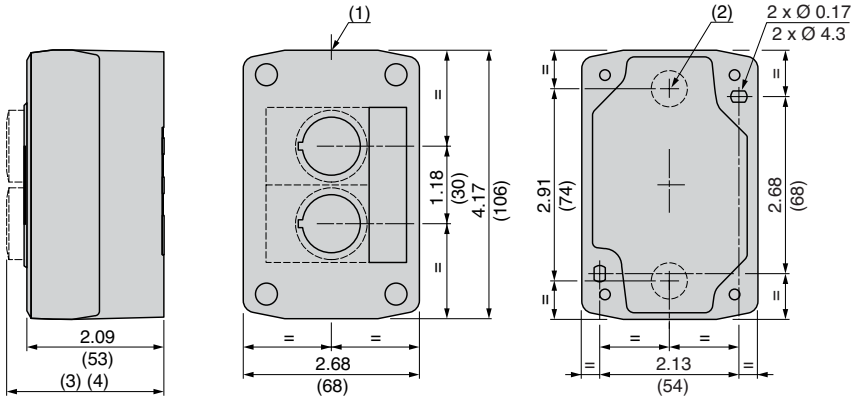

Three-way control stations XALD3••, K3••, D03

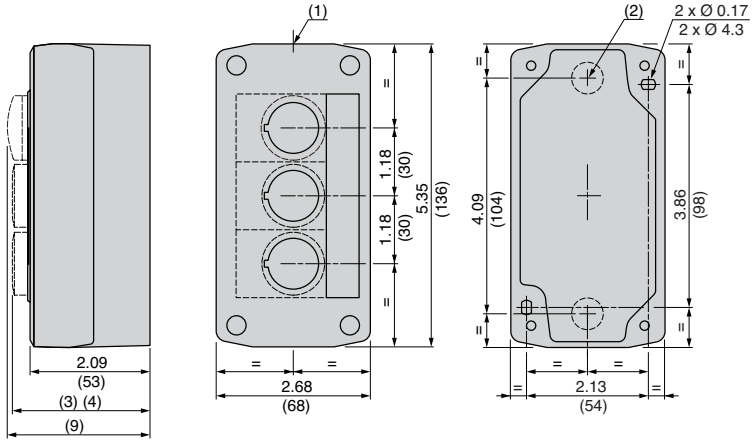

(1) 2 knock-outs for PG 13.5 cable glands, maximum capacity 0.47 in (12 mm).
(2) Knock-out for cable entry, maximum capacity 0.55 in (14 mm).

Examples:
(3) 2.44 in (62 mm) for full guard buttons.
(4) 2.59 in (66 mm) for no guard buttons.
(5) 3.58 in (91 mm) for latching mushroom head push buttons.
(6) 2.91 in (74 mm) for key switches.
(7) 4.45 in (113 mm) for latching mushroom head push buttons with key release.
(8) 3.78 in (96 mm) for key switches with key.
(9) 2.52 in (64 mm) for pilot lights.

Dual Dimensions: in (mm)

Components: page 7 | Specifications: page 8 | References: page 10

Dimensions *(continued)*

Four-way control stations XALD4••, K4••, D04

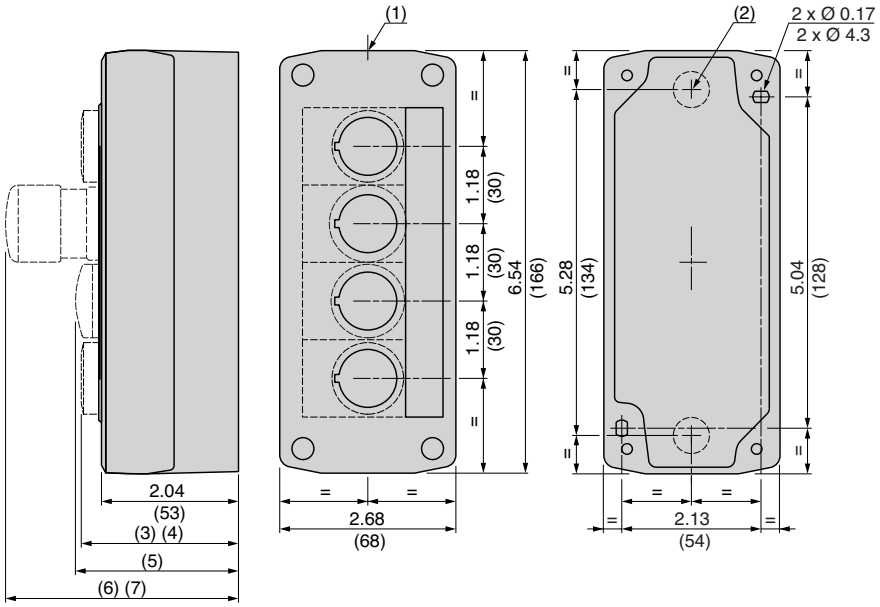

Five-way control stations XALD5••, K5••, D05

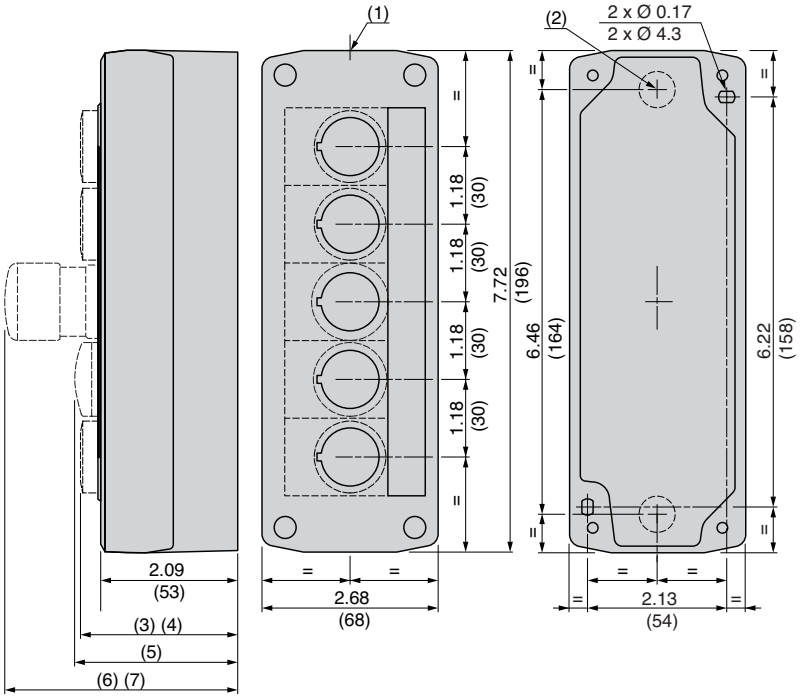

(1) 2 knock-outs for PG 13.5 cable glands, maximum capacity 0.47 in (12 mm).
(2) Knock-out for cable entry, maximum capacity 0.55 in (14 mm).

Examples:
(3) 2.44 in (62 mm) for full guard buttons.
(4) 2.59 in (66 mm) for no guard buttons.
(5) 2.52 in (64 mm) for pilot lights.
(6) 3.43 in (87 mm) for mushroom head push buttons.
(7) 3.07 in (78 mm) for selector switches.

Dual Dimensions: in (mm)

Harmony™ control stations and enclosures

XAP 22 mm enclosures

Components

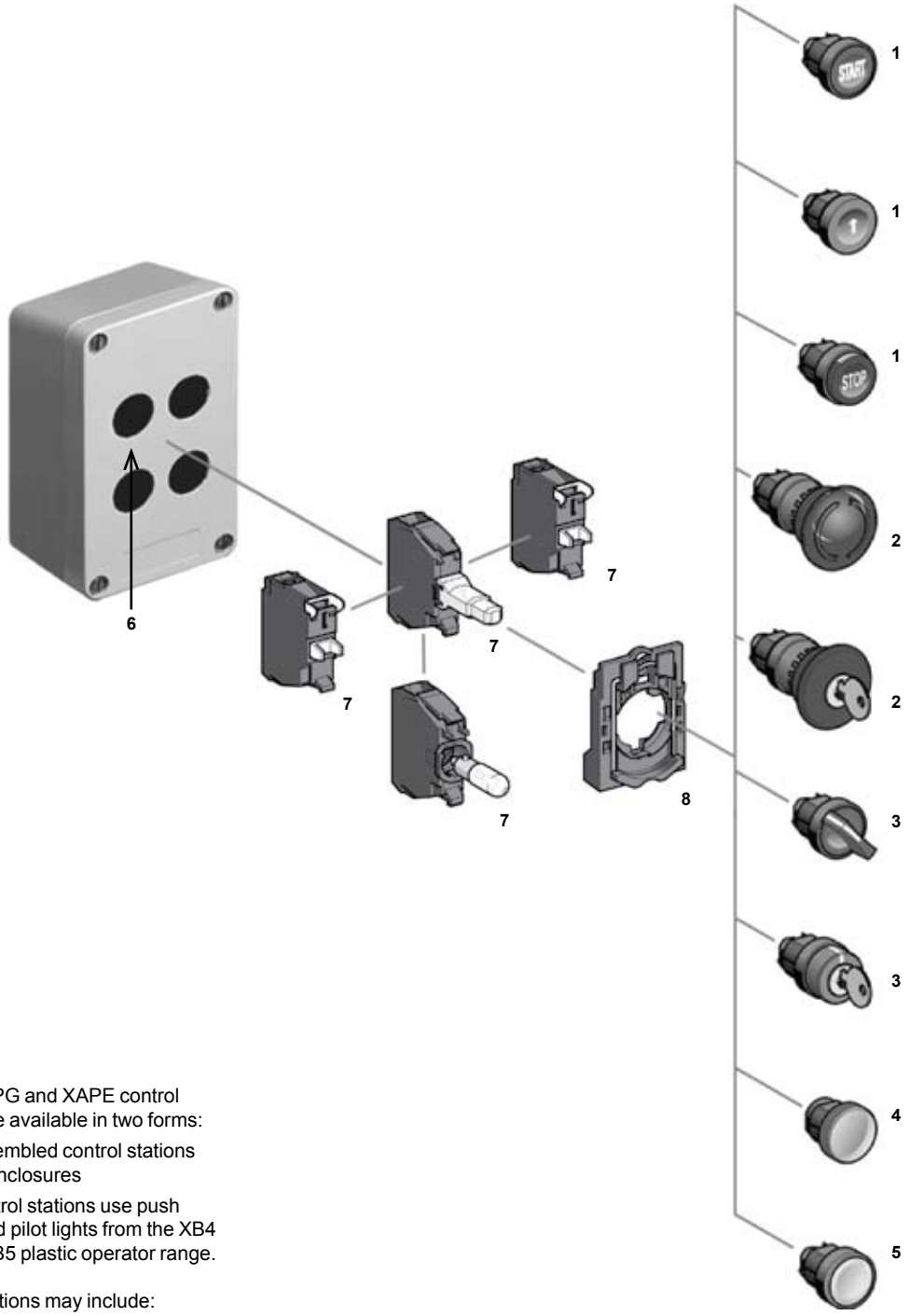

XAPA, XAPG and XAPE control stations are available in two forms:

- Pre-assembled control stations
- Empty enclosures

These control stations use push buttons and pilot lights from the XB4 metal or XB5 plastic operator range.

Control stations may include:

1 - Non-illuminated operators.
2 - Mushroom operators.
3 - Selector switches.
4 - Pilot lights.
5 - Illuminated operators.
6 - Enclosure.
7 - Contact blocks and light modules.
8 - Mounting collar.

Specifications: page 15
References: page 16
Dimensions: page 16

Harmony™ control stations and enclosures

XAP 22 mm enclosures

XAPA Glass-reinforced polyester insulated enclosures	
Material	Glass-reinforced polyester.
Approvals	Special version: CSA Type 4 and 5 (undrilled version)
Protective treatment	Standard version: “TC” and “TH” treatments.
Ambient temperature	Operation: -25 °C to +70 °C (-13 °F to +158 °F). Storage: -40 °C to +70 °C (-40 °F to +158 °F).
Degree of protection	IP 65 conforming to IEC 60529 and IP 657 conforming to NF C 20-010. Type 4, 4X, 12.
Electric shock protection	Class II conforming to IEC 60536 and NF C 20-030.
Flame resistance	CSTB: M3, NF C 20-455: 850°C, IEC 60092: 960 °C, UL 94: VO.
Chemical resistance	High degree of resistance to acids, bases, sea water, mineral salts, all solvents, gasoline, diesel, oils and greases.
Cable entry	Undrilled
XAPG Die Cast metal enclosures	
Material	Zinc alloy (XAPG1-XAP4) Aluminum (XAPG5)
Approvals	Special version: CSA Type 4 and 5 (undrilled version); UL Type 1, 2, 4, and 12; Standard CSA Type 1, 4, 4X, and 12.
Protective treatment	Standard version: “TC” treatment. Special version: “TH” treatment.
Ambient temperature	Operation: -25 °C to +70 °C (-13 °F to +158 °F). Storage: -40 °C to +70 °C (-40 °F to +158 °F).
Degree of protection	IP 65 conforming to IEC 60529 and IP 657 conforming to NF C 20-010. UL Type 4, 12.
Electric shock protection	Class I conforming to IEC 60536 and NF C 20-030.
Chemical resistance	Special treatments on request.
Cable entry	Tapped entries for cable glands, see dimensions on page 19
XAPE Flush mount enclosures	
Material and color	Anodized aluminum front plate. Insulated protective rear cover.
Protective treatment	Standard version: “TC” and “TH” treatments.
Ambient temperature	Operation: -25 °C to +70 °C (-13 °F to +158 °F).Storage: -40 °C to +70 °C. (-40 °F to +158 °F).
Degree of protection	IP 65 conforming to IEC 60529 and IP 657 conforming to NF C 20-010. CSA Type 1, 4, 4X, and 12.
Electric shock protection	Class I conforming to IEC 60536 and NF C 20-030.
Chemical resistance	High degree of resistance to organic acids, diluted mineral acids, salts, alcohol, acetone, chloride and fluoride solvents, oils and gasoline.
Cable entry	Fiber pull box

File E164353
CCN NKCR
(XAPG only)

File LR 44087
Class 3211 03

CE Marked

Components: page 14
References: page 16
Dimensions: page 16

Harmony™ control stations and enclosures

XAP 22 mm enclosures

Glass-reinforced polyester enclosures



XAPA1100



XAPA2100

Undrilled Enclosures, Glass-Reinforced Polyester

Type		H x W Dimensions: in (mm)	References
NEMA 4, 4X, 13 Usable depth 3.27 in (83 mm)	without hinges	3.34 x 5.75 (85 x 146)	**XAPA1100**
		3.34 x 8.90 (85 x 226)	**XAPA2100**
		5.95 x 9.49 (151 x 241)	**XAPA3100**
	with hinges	5.95 x 9.49 (151 x 241)	**XAPA4100**
Undrilled Grounding Plate	Sheet steel with ground screw	For XAPA1100	**XAPZ100**
		For XAPA2100	**XAPZ200**
		For XAPA3100 and 4100	**XAPZ300**

Undrilled Insulated enclosures XAPA1100, XAP2100

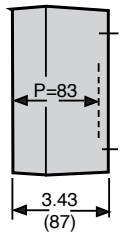

Mounting

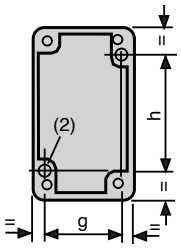

XAPA3100, XAPA4100

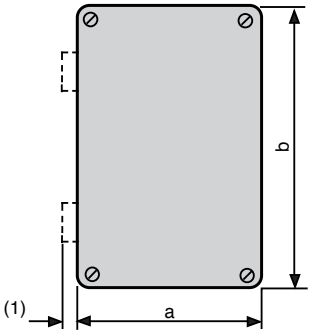

Cable entries not drilled
(1) 0.43 in (11 mm) for XAPA4••• stations with hinges
(2) 2 x 0.22 in (5.6 mm) untapped holes, depth 0.47 in (12 mm)

XAP	a	b	g	h
A1100	3.35 in (85 mm)	5.75 in (146 mm)	2.76 in (70 mm)	4.13 in (105 mm)
A2100	3.35 in (85 mm)	8.90 in (226 mm)	2.76 in (70 mm)	7.09 in (180 mm)
A3100	5.94 in (151 mm)	9.49 in (241 mm)	5.31in (135 mm)	7.87 in (200 mm)
A4100	5.94 in (151 mm)	9.49 in (241 mm)	5.31 in (135 mm)	7.87 in (200 mm)

Components: page 14
Specifications: page 15

Schneider Electric

Harmony™ control stations and enclosures

XAP 22 mm enclosures

Glass-reinforced polyester enclosures



XAPA1104



XAPA2108

Drilled Insulated Enclosures, Glass-Reinforced Polyester

Type	Number of Knock-outs 22 mm	Number of Rows Vertical	Number of Rows Horizontal	References
NEMA 4, 4X, 13 Usable depth 3.27 in (83 mm) 1.58 in (40 mm) centerline spacing of holes	1	1	1	**XAPA1110**
	2	1	2	**XAPA1120**
	4	2	2	**XAPA1104**
	8	2	4	**XAPA2108**
	16	4	4	**XAPA3116**

Drilled Grounding Plate	Sheet steel with ground screw	For XAPA1110	**XAPZ110**
		For XAPA1120	**XAPZ120**
		For XAPA1104	**XAPZ104**
		For XAPA2108	**XAPZ208**
		For XAPA3116	**XAPZ316**

Insulated enclosures with cut-outs XAPA

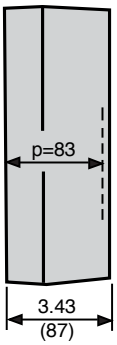

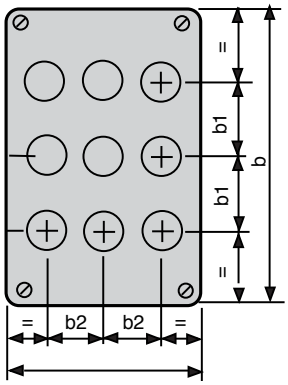

Mounting

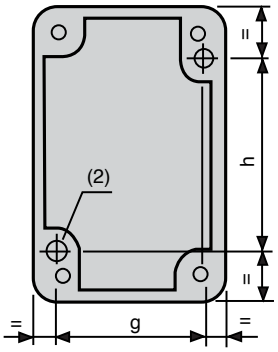

Cable entries not drilled
(2) 2 x 0.22 in (5.6 mm) untapped holes, depth 0.47 in (12 mm)

For 22 mm control and signaling units

XAP	a	b	b1	b2	g	h
A1110	3.35 in (85 mm)	5.75 in (146 mm)	–	–	2.76 in (70 mm)	4.13 in (105 mm)
A1120	3.35 in (85 mm)	5.75 in (146 mm)	1.57 in (40 mm)	–	2.76 in (70 mm)	4.13 in (105 mm)
A1104	3.35 in (85 mm)	5.75 in (146 mm)	1.57 in (40 mm)	1.18 in (30 mm)	2.76 in (70 mm)	4.13 in (105 mm)
A2108	3.35 in (85 mm)	8.90 in (226 mm)	1.57 in (40 mm)	1.18 in (30 mm)	2.76 in (70 mm)	7.09 in (180 mm)
A3116	5.94 in (151 mm)	9.49 in (241 mm)	1.57 in (40 mm)	1.18 in (30 mm)	5.31 in (135 mm)	7.87 in (200 mm)

Components: page 14
Specifications: page 15

Harmony™ control stations and enclosures

XAP 22 mm enclosures

Die cast enclosures



XAPG39400



XAPG29703

Undrilled Die Cast Zinc Enclosures (Painted Grey RAL 7032)

Type	Material	Usable Depth	H x W x D Dimensions	References
NEMA Type 4, 13	Zinc	1.93 in (49 mm)	3.15 x 3.15 x 2.03 in (80 x 80 x 51.5 mm)	**XAPG19100**
			5.12 x 3.15 x 2.03 in (130 x 80 x 51.5 mm)	**XAPG29100**
			6.89 x 3.15 x 2.03 in (175 x 80 x 51.5 mm)	**XAPG39100**
		2.93 (74.5 mm)	3.15 x 3.15 x 3.03 in (80 x 80 x 77 mm)	**XAPG19400**
			5.12 x 3.15 x 3.03 in (130 x 80 x 77 mm)	**XAPG29400**
			6.89 x 3.15 x 3.03 in (175 x 80 x 77 mm)	**XAPG39400**
			8.66 x 3.15 x 3.03 in (220 x 80 x 77 mm)	**XAPG49400**
	Aluminum	2.93 (74.5 mm)	12.20 x 3.35 x 3.03 in (310 x 85 x 77 mm)	**XAPG59400**

Drilled Die Cast Zinc Enclosures (Painted Grey RAL 7032)

Type	Material	Usable Depth	Number of 22 mm knock-outs	References
NEMA Type 4, 13 1.18 in (30 mm) centerline spacing of holes	Zinc	1.93 in (49 mm)	2	**XAPG19702**
			3	**XAPG29703**
			4	**XAPG39704**
		2.93 (74.5 mm)	2	**XAPG19802**
			3	**XAPG29803**
			4	**XAPG39804**
NEMA Type 4, 13 1.58 in (40 mm) centerline spacing of holes	Zinc	1.93 in (49 mm)	1	**XAPG19201**
			2	**XAPG29202**
			3	**XAPG39203**
		2.93 (74.5 mm)	1	**XAPG19501**
			2	**XAPG29502**
			3	**XAPG39503**
			4	**XAPG49504**
	Aluminum	2.93 (74.5 mm)	5	**XAPG59505**

References	a	b	c	g	h	Conduit opening supplied
	in (mm)	in (mm)	in (mm)	in (mm)	in (mm)	
XAPG19201	3.15 (80)	3.15 (80)	2.03 (51.5)	1.97 (50)	2.56 (65)	¾" NPT
XAPG29202	3.15 (80)	5.12 (130)	2.03 (51.5)	1.97 (50)	4.53 (115)	¾" NPT
XAPG39203	3.15 (80)	6.90 (175)	2.03 (51.5)	1.97 (50)	6.30 (160)	¾" NPT
XAPG19501	3.15 (80)	3.15 (80)	3.03 (77)	1.97 (50)	2.56 (65)	¾" NPT
XAPG29502	3.15 (80)	5.12 (130)	3.03 (77)	1.97 (50)	4.53 (115)	¾" NPT
XAPG39503	3.15 (80)	6.90 (175)	3.03 (77)	1.97 (50)	6.30 (160)	¾" NPT
XAPG49504	3.15 (80)	8.66 (220)	3.03 (77)	1.97 (50)	8.07 (205)	¾" NPT
XAPG59505	3.35 (85)	12.20 (310)	3.03 (77)	2.16 (55)	11.60 (295)	¾" NPT
XAPG19702	3.15 (80)	3.15 (80)	2.03 (51.5)	1.97 (50)	2.56 (65)	¾" NPT
XAPG29703	3.15 (80)	5.12 (130)	2.03 (51.5)	1.97 (50)	4.53 (115)	¾" NPT
XAPG39704	3.15 (80)	6.90 (175)	2.03 (51.5)	1.97 (50)	6.30 (160)	¾" NPT
XAPG19802	3.15 (80)	3.15 (80)	3.03 (77)	1.97 (50)	2.56 (65)	¾" NPT
XAPG29803	3.15 (80)	5.12 (130)	3.03 (77)	1.97 (50)	4.53 (115)	¾" NPT
XAPG39804	3.15 (80)	6.90 (175)	3.03 (77)	1.97 (50)	6.30 (160)	¾" NPT

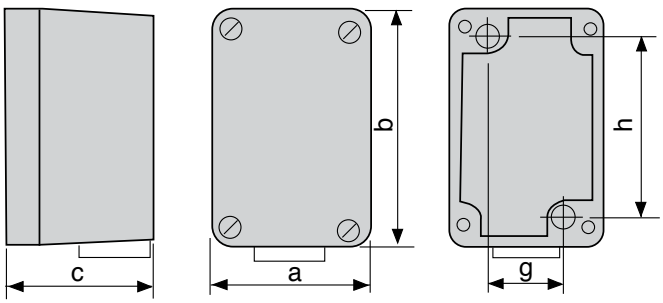

Components: page 14
Specifications: page 15

Schneider Electric

Harmony™ control stations and enclosures

XAP 22 mm enclosures

Flush plates



XAPE301



XAPE302



XAPE303



XAPE305

Drilled Anodized Aluminum Flush Plates (for use with XB4 metal push buttons, pilot lights, selector switches, mushroom head operators, legend plates and accessories)

Type	Material	Number of 22mm holes	H x W Dimensions: in (mm)	References
NEMA Type 4, 13 1.18 in (30) centerline spacing of holes	Anodized Aluminum	1	2.83 x 2.83 (72 x 72)	**XAPE301**
		2	4.13 x 2.83 (105 x 72)	**XAPE302**
		3	5.43 x 2.83 (138 x 72)	**XAPE303**
		4	6.73 x 2.83 (171 x 72)	**XAPE304**
		5	8.03 x 2.83 (204 x 72)	**XAPE305**

Optional Fiberglass Back Box (for finger protection, if required)

Type	Material		References
Protective rear covers	Insulating Fiberglass	For flush plate XAPE301	**XAPE901**
		For flush plate XAPE302	**XAPE902**
		For flush plate XAPE303	**XAPE903**
		For flush plate XAPE304	**XAPE904**
		For flush plate XAPE305	**XAPE905**

Flush mounting enclosures
Front plate with cut-outs for 22 mm XB4 and XB5 operators
XAPE30●

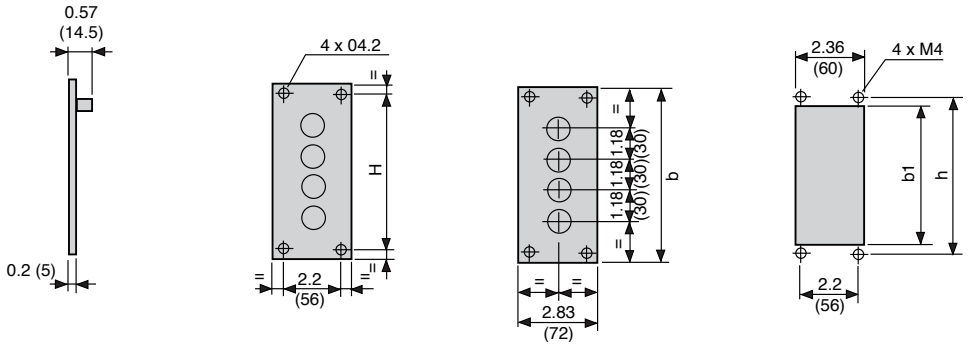

Front plate with cut-outs for 22 mm XB4 and XB5 operators

XAP	b in (mm)	b1 in (mm)	h in (mm)
E301	2.83 (72)	1.73 (44)	2.20 (56)
E302	4.13 (105)	3.03 (77)	3.50 (89)
E303	5.43 (138)	4.33 (110)	4.80 (122)
E304	6.73 (171)	5.63 (143)	6.10 (155)
E305	8.03 (204)	6.93 (176)	7.40 (188)

Mounting of front plate and protective rear cover

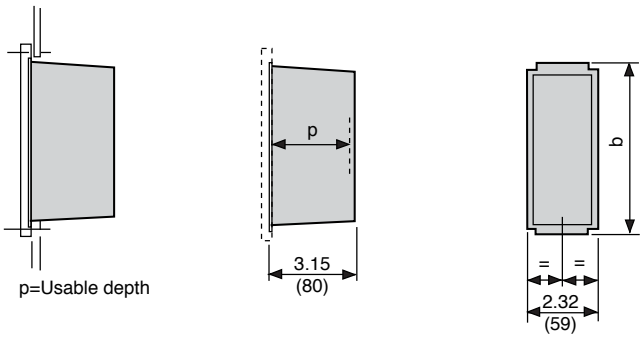

Protective rear cover for front plate XAPE30●

XAP	b in (mm)	p in (mm)
E901	2.05 (52)	3.25 (82.5)
E902	3.35 (85)	3.25 (82.5)
E903	4.65 (118)	3.25 (82.5)
E904	5.94 (151)	3.25 (82.5)
E905	7.24 (184)	3.25 (82.5)

Components: page 14
Specifications: page 15

Harmony™ control stations and enclosures

9001B standard duty control stations

Note: When ordering, add prefix "9001" to the reference.



NEMA 1
Surface Mounting
9001BG201



NEMA 1
Flush Mounting
(w/o pullbox)
9001BF201



NEMA 4
9001BW243



NEMA 7 and 9
9001BR103

Control Stations

No. of Buttons	Nameplate Markings and Features	Contact Symbol *(1)*	Surface Mounting NEMA 1	Stainless Steel Flush Plate *(2)*	Watertight and Dusttight NEMA 4	For Hazardous Locations NEMA 7 & 9 *(3)*
			References	References	References	References
1	Start	1	**BG101**	**BF101**	**BW146**	**BR101**
	Stop	3	**BG102**	**BF102**	**BW147**	—
	Stop (Mushroom Button)	3	**BG103**	—	**BW151**	**BR103**
	Stop (Lockout)	3	**BG104**	—	**BW148**	**BR104**
	Universal (w/o legend insert)	16	**BG107**	**BF107**	**BW159**	**BR107**
	Off-On (Selector Switch)	19	**BG111**	—	—	—
	Hand-Off-Auto (Selector Switch)	17	**BG112**	—	—	—
	Universal Selector Switch (w/o legend insert)	19 or 17	**BG114**	—	—	—
2	Start-Stop	145	**BG201**	**BF201**	**BW240**	**BR204**
	Start-Stop (for latching Applications)	146	**BG202**	—	**BW252**	**BR202**
	Start-Stop (Mushroom on Stop)	145	**BG203**	—	**BW250**	**BR203**
	Start-Stop (Lockout on Stop)	145	**BG204**	—	**BW241**	**BR204**
	Start-Stop (Mushroom on both)	145	**BG205**	—	**BW246**	**BR205**
	Forward-Reverse	146	**BG206**	—	**BW242**	—
	Open-Close	146	**BG207**	—	**BW244**	—
	Up-Down	146	**BG208**	**BF208**	**BW243**	**BR208**
	Raise-Lower	146	**BG209**	—	**BW253**	—
	On-Off	145	**BG210**	**BF210**	**BW245**	—
	On-Off	146	**BG211**	**BF211**	**BW254**	—
	Universal (w/o legend inserts)	25	**BG214**	—	**BW260**	**BR214**
	Start-Stop (Maintained Contact)	10	**BG215**	**BF215**	**BW255**	**BR215**
	On -Off (Maintained Contact)	10	**BG216**	**BF216**	**BW256**	**BR216**
	Universal (Maintained contact w/o legend inserts)	10	**BG218**	—	—	**BR218**
3	Fast-Slow-Stop	109	**BG301**	—	—	—
	Forward-Reverse-Stop	109	**BG302**	—	—	—
	Open-Close-Stop	109	**BG303**	**BF303**	—	—
	Raise-Lower-Stop	109	**BG304**	—	—	—
	Up-Down-Stop	109	**BG305**	**BF305**	—	—
	Start-Jog-Stop	109	**BG316**	—	—	—
	Universal (w/o legend inserts)	8	**BG307**	—	—	—
	Start-Stop, Red Pilot Light: 120Vac/dc	145 & 121	**BG308**	**BF308**	—	—

(1) See Contact Symbols on page 21.
(2) Uses standard 2.0 or 2.13 in. deep wall boxes, single gang for Types BF1 and BF2, two gang for Type BF3
(3) Also rated for Class I, Division I and II, Groups B, C, or D; Class II, Division I and II, Groups E, F, or G

Accessories

Description (for use with 9001BG●●● control stations)	Color	References
Mushroom Caps for NEMA 1	Red	**B301**
Mushroom Caps for NEMA 4	Red	**B303**
Lockout Kit for NEMA 1	—	**B321**
Pilot Light Lenses, NEMA 1 Surface Mount	Red	**B331**
Pilot Light Lenses, NEMA 1 Surface Mount	Green	**B332**
Pilot Light Lenses, NEMA 1 Flush Mount	Red	**B341**
Pilot Light Lenses, NEMA 1 Flush Mount	Green	**B342**

Replacement Covers

Description	References
Replacement Covers for BW240	**BWD219**
Replacement Covers for BW241 *(4)*	**BWD220**
Replacement Covers for BW242-BW260	**BWD219**
Replacement Covers for Type BR devices	**N/A**

(4) Includes factory installed lockout on the cover.

For Replacement Interiors, see page 21.
For Electrical Contact Ratings, see page 21.

Interchangeable Push Button Legend Inserts

Marking	For 9001BG●●●	For 9001BR●●●	For 9001BW●●● (Round Button)	For 9001BW●●● (Mushroom Button)
Start	**B101**	**B161**	**B259**	**B282**
Stop	**B102**	**B162**	**B260**	**B283**
Fast	**B103**	—	—	—
Slow	**B104**	—	—	—
Forward	**B105**	—	**B255**	—
Reverse	**B106**	—	**B256**	—
Open	**B107**	—	**B263**	—
Close	**B108**	—	**B264**	—
Raise	**B109**	—	**B261**	—
Lower	**B110**	—	**B262**	
Up	**B111**	—	**B253**	**B276**
Down	**B112**	—	**B254**	**B277**
On	**B115**	**B175**	**B257**	—
Off	**B116**	**B176**	**B258**	—
Hand	**B117**	—	**B265**	—
Auto	**B118**	—	**B266**	—
Jog	**B119**	—	—	—
Blank (Black)	**B129**	**B189**	**B251**	**B251**
Blank (Red)	**B129R**	**B189R**	**B252**	**B252**

"C" Shaped Mounting Bracket for 9001BR●●● Interior

Reference
3110112001 *(Do not add prefix "9001" to this reference.)*

Dimensions:
page 22

Harmony™ control stations and enclosures

9001B standard duty control stations

Note: When ordering, add prefix "9001" to the reference.



9001BGC214
(Type BGC contact block assemblies include cover.)



9001BGB214



9001BOC361

Replacement Interiors For Type B Standard Duty Push Button Stations

For Control Station Types	Contact Symbol (see below)	Contact Block Assembly Type	Terminal Block Wiring Receptacle Type
BF101–BF107	16	**BOC107**	**BFB107**
BF111–BF114	19 or 17	**BOC114**	**BFB114**
BF121–BF123	121	**BOC123**	**BFB123**
BF201–BF214	25	**BOC214**	**BFB214**
BF215–BF218	10	**BOC218**	**BFB214**
BF221–BF224	7 or 19 & 121	**BOC224**	**BFB224**
BF225–BF226	17 or 19 & 16	**BOC226**	**BFB226**
BF301–BF307	8	**BOC214** **BOC107**	**BFB214** **BFB107**
BF308–BF309	25 & 121	**BOC214** **BOC123**	**BFB214** **BFB123**
BF310–BF313	10 & 121	**BOC218** **BOC123**	**BFB214** **BFB123**
BF314–BF315	17 or 19 & 25	**BOC214** **BOC114**	**BFB214** **BFB114**
BG101–BG107	16	**BGC107**	**BGB107**
BG111–BG114	17 or 19	**BGC114**	**BGB114**
BG121–BG123	121	**BGC123**	**BGB123**
BG201–BG214	25	**BGC214**	**BGB214**
BG215–BG218	10	**BGC218**	**BGB214**
BG221–BG224	17 or 19 & 121	**BGC224**	**BGB224**
BG225–BG226	17 or 19 & 16	**BGC226**	**BGB226**
BG301–BG307 BG316–BG326	8	**BGC307**	**BGB307**
BG308–BG309	25 & 121	**BGC309**	**BGB309**
BG310–BG313	10 & 121	**BGC313**	**BGB309**
BG314–BG315	17 or 19 & 25	**BGC315**	**BGB315**
BR101–BR107	16	**BOC107**	**BFB107**
BR202–BR214	25	**BOC214**	**BFB214**
BR215–BR219	10	**BOC218**	**BFB214**
BW101–BW107	16	**BOC107**	**BFB107**
BW202–BW214	25	**BOC214**	**BFB214**
BW215–BW218	10	**BOC218**	**BFB214**
BW146–BW159	16	**BOC360**	
BW240–BW260	25	**BOC361**	
BW255–BW258	10	**BOC362**	

Notes: Contact block assemblies for all Type BG stations include cover and contact block. Replacement contact block assemblies and terminal block wiring receptacles for push buttons have provision for 1 N.O. & 1 N.C. circuit on each button. Unneeded circuits need not be wired. Order separate legend plates, if required, from listing on page 20.

Electrical Contact Ratings
(OSHA Regulation, Section 1910.70, Overhead and Gantry Cranes, limits the voltage of pendant push buttons to 150 Vac or 300 Vdc.)

AC—NEMA B600							DC—NEMA P600		
Volts	Inductive 35% Power Factor					Resistive 75% Power Factor	Volts	Inductive and Resistive	
	Make		Break		Continuous Carrying Amperes	Make, Break and Continuous Carrying Amperes		Make and Break Amperes	Continuous Carrying Amperes
	A	VA	A	VA					
120	30.5	3600	3.75	360	5	5	120	1.1	5
240	15	3600	1.5	360	5	5	240	0.55	5
480	7.5	3600	.75	360	5	5	600	0.2	5
600	6	3600	.6	360	5	5			

Contact Symbols

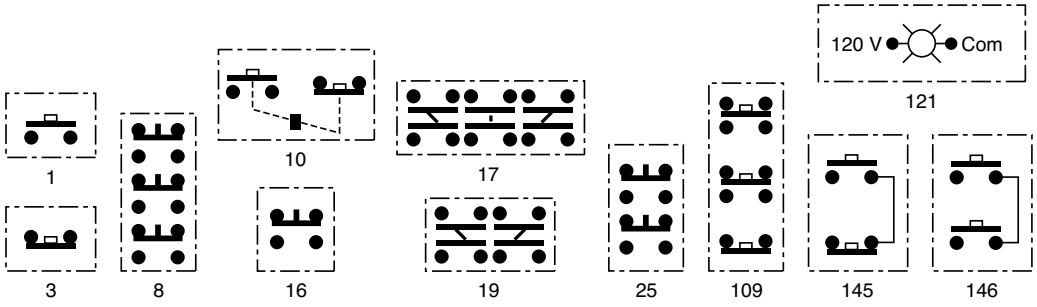

Dimensions:
page 22

Harmony™ control stations and enclosures

9001B standard duty control stations

Dimensions

Surface Mount Type BG, Glass Filled Polyester Cover

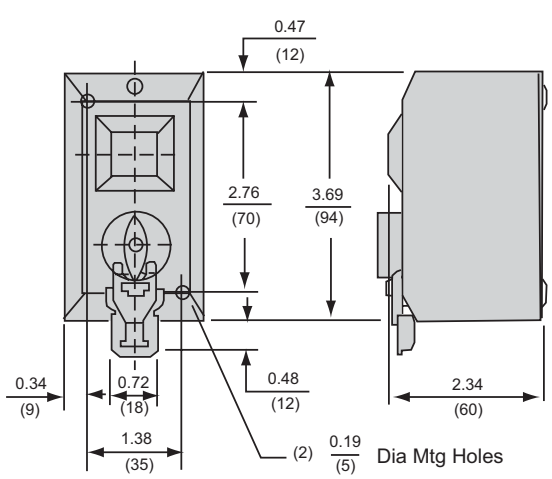

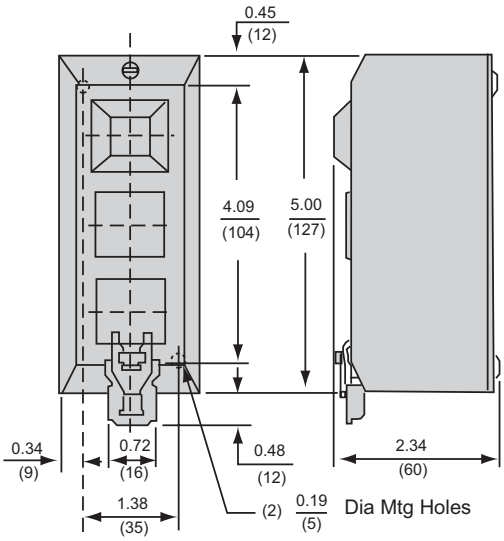

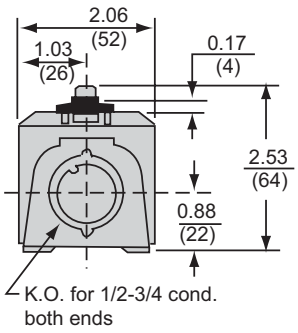

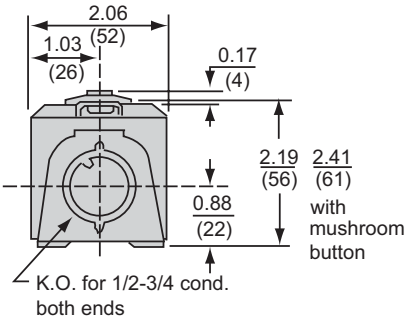

Flush Mount Type BF, Stainless Steel

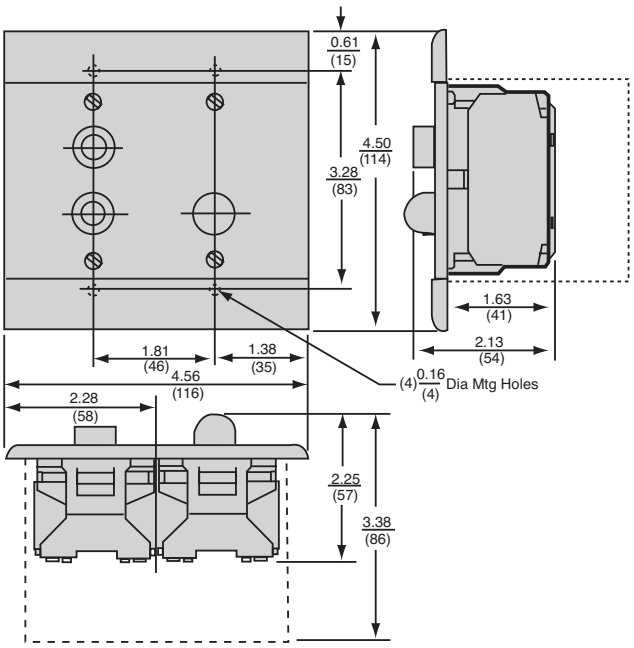

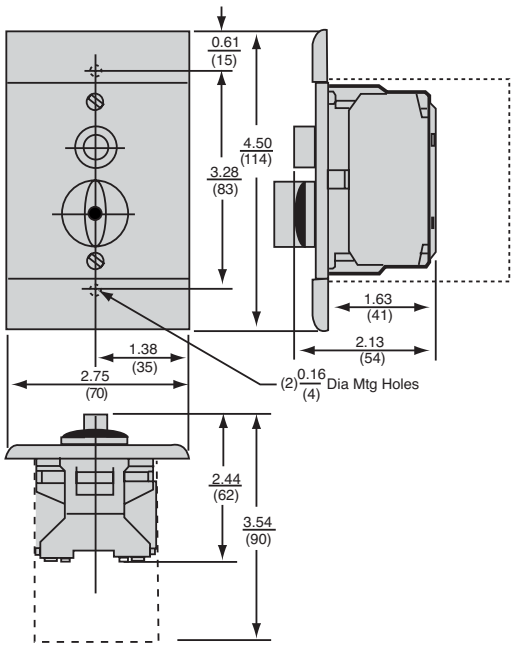

Dual Dimensions: in (mm)

References:
page 20

Dimensions

Hazardous Location Type BR, Cast Aluminum Enclosure

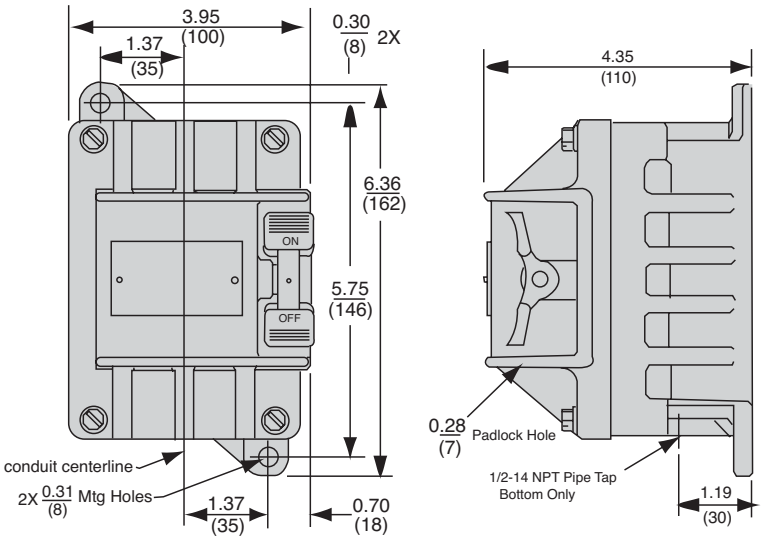

Watertight & Dusttight Type BW, Cast Zinc Enclosure

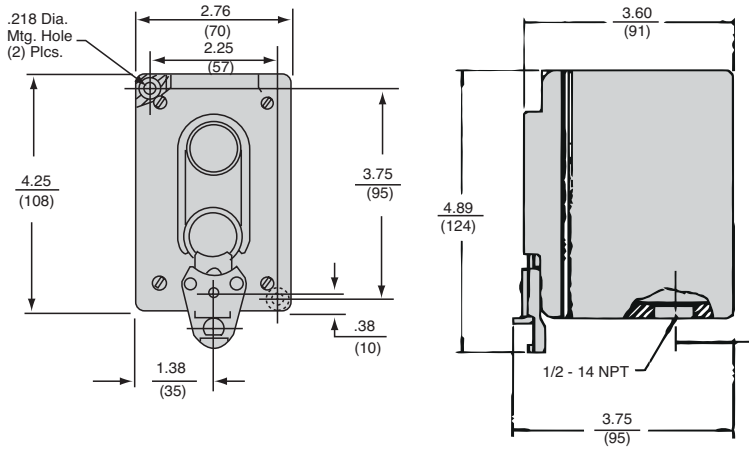

Dual Dimensions: in (mm)

References:
page 20

Harmony™ control stations and enclosures

9001KY/SKY 30 mm control stations

Components

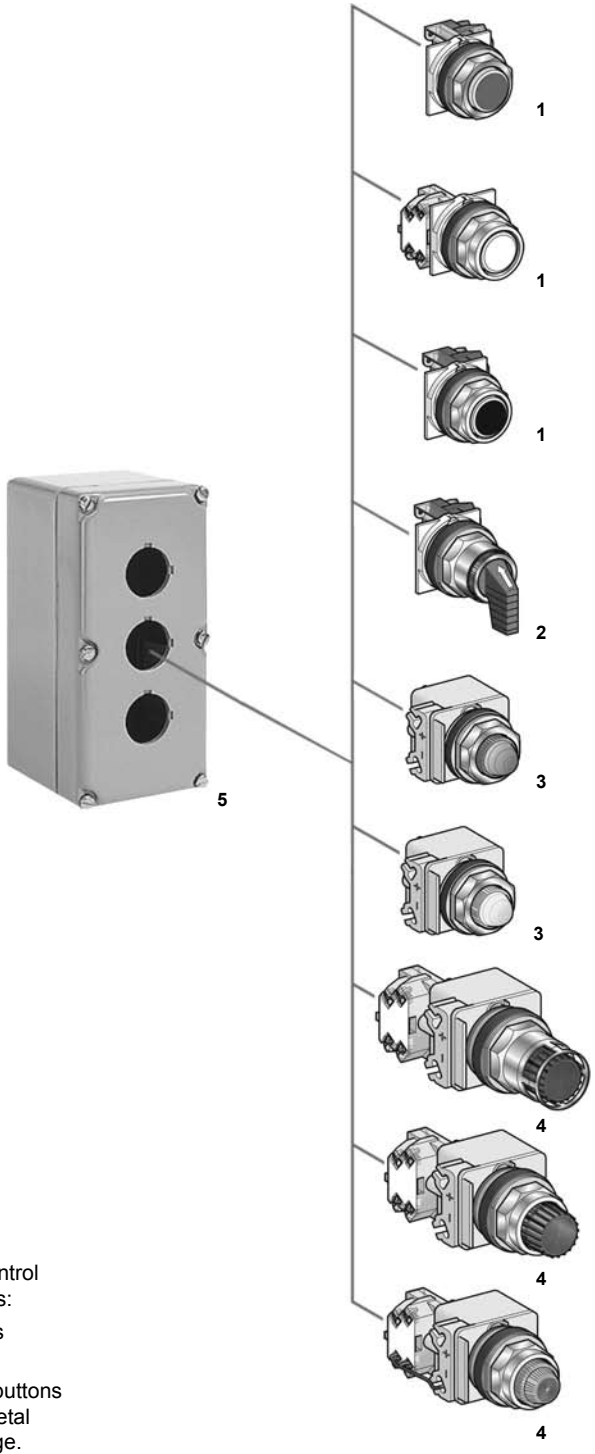

9001KY and 9001SKY 30 mm control stations are available in two forms:

- Pre-assembled control stations
- Empty enclosures

These control stations use push buttons and pilot lights from the 9001K metal and 9001SK plastic operator range.

Control stations may include:

1 - Non-illuminated operators.
2 - Selector switches.
3 - Pilot lights.
4 - Illuminated operators.
5 - Enclosure.

References: page 25
Dimensions: page 27

Harmony™ control stations and enclosures

9001KY/SKY 30 mm empty enclosures

Note: When ordering, add prefix "9001" to the reference.

Empty Enclosures (for Customer Assembly)

	UL Types 1, 3 and 13/ NEMA 1, 3, and 13	UL Types 1, 3, 4 and 13/ NEMA 1, 3, 4 and 13	UL Types 1, 3, 4, 4X and 13/ NEMA 1, 3, 4, 4X and 13	
	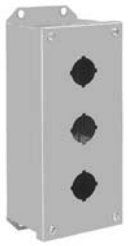			

No of Holes	Sheet Steel *(1)*	Die Cast Zinc *(1)*	Stainless Steel (304) *(1)*	Polymeric (Plastic) *(2)*
	Reference	Reference	Reference	Reference
1	**KYAF1**	**KY1**	**KYSS1**	**SKY1**
2	**KYAF2**	**KY2** *(3)*	**KYSS2**	**SKY2**
3	**KYAF3**	**KY3** *(3)*	**KYSS3**	**SKY3**
4	**KYAF4**	**KY4** *(3)*	**KYSS4**	**SKY4**
6	**KYAF6**	**KY6**	**KYSS6**	**SKY6**

Empty Guarded Enclosures (mushroom head operator not included)



9001KYG1Y

No of Holes	UL Types 1, 3, 4 and 13/ NEMA 1, 3, 4 and 13			
	Die Cast Zinc *(1)*			
	Cover Color	Box Color	Conduit Opening	Reference
1	Gray	Gray	3/4 in. - 14 NPT	**KYG1**
1	Yellow	Gray	3/4 in. - 14 NPT	**KYG1Y**
1	Gray	Gray	25 mm Metric	**TYG1**
1	Yellow	Gray	25 mm Metric	**TYG1Y**



9001K26

Stainless Steel (302) NEMA 1 Flush Plates *(4) (5)*

No of Holes	Description	Reference
1	1 Hole flush plate, cover screws, insulating liners	**K25**
2	2 Hole flush plate, cover screws, insulating liners	**K26**
3	3 Hole flush plate, cover screws, insulating liners	**K27**
4	4 Hole flush plate, cover screws, insulating liners	**K28**

(1) Use 9001K metal push buttons, pilot lights, selector switches, mushroom head operators, legend plates and accessories."
(2) Use 9001SK plastic push buttons, pilot lights, selector switches, mushroom head operators, legend plates and accessories.
(3) Only KN200 series legend plates will fit upright on these enclosures with their long axis vertical.
(4) To be used with a standard 2 x 3 in. general purpose switch box. A 2.5 in. deep switch box should be used if two Type KA contact blocks are mounted side by side. If two Type KA contact blocks are mounted in tandem, a 3.5 in. deep box should be used.
(5) Although 9001K oiltight/watertight operators are used, an assembled control station using these flush plates is not oiltight and watertight. These kits include a stainless steel flush plate, cover screws and a set of liners which must be used to maintain electrical clearances.

Components: page 24
Dimensions: page 27

Harmony™ control stations and enclosures

9001KY/SKY 30 mm control stations

Note: When ordering, add prefix "9001" to the reference.



9001KYK31



9001KYSS300



9001SKY201



9001KYG1Y2

Assembled Control Stations

No. of Holes	Operator Style and Features	Reference	Consists of: Enclosure	Operators	Contact Blocks	Legend Plates
UL Types 1, 3, 4 and 13/NEMA 1, 3, 4 and 13 Die Cast Zinc Enclosure *(1)*						
1	Selector Switch (3 Pos Maintained)	**KYK111**	KY1	KS43B	KA1	Hand-Off-Auto
	Selector Switch (2 Pos Maintained)	**KYK110**	KY1	KS11B	KA1	Off-On
	Push Button (Momentary)	**KYK11**	KY1	KR1B	KA1	Start
	Push Button (Momentary)	**KYK13**	KY1	KR1R	KA1	Stop
	Mushroom Button (Momentary)	**KYK14**	KY1	KR4R	KA1	Stop
	Push Button (with Lockout)	**KYK15**	KY1	KR3R, K4	KA1	Stop
	Break Glass Operator	**KYK116**	KY1	K15	KA1	To Stop—Break Glass
	Break Glass Operator (Red Enclosure)	**KYK117**	KY1S1	K15	KA1	To Stop—Break Glass
2	2 Push Buttons (Lockout on Stop)	**KYK224**	KY2	KR1B, KR3R, K4	KA1, KA1	Jog-Stop
	2 Push Buttons	**KYK218**	KY2	KR1B, KR3R	KA1, KA1	On-Off
	2 Push Buttons	**KYK26**	KY2	KR1B, KR1B	KA1, KA1	Open-Close
	2 Push Buttons	**KYK25**	KY2	KR1B, KR1B	KA1, KA1	Up-Down
	2 Push Buttons	**KYK21**	KY2	KR1B, KR3R	KA1, KA1	Start-Stop
	2 Push Buttons (with Sealed Contacts) *(4)*	**KYK223**	KY2	KR1B, KR3R	KA51, KA51	Start-Stop
	2 Push Buttons (Lockout on Stop)	**KYK23**	KY2	KR1B, KR3R, K4	KA1, KA1	Start-Stop
	2 Push Buttons (Maintained/Interlocked)	**KYK27**	KY2	KR11GR	KA1	Start-Stop
	1 Push Button, 1 Mushroom Button	**KYK22**	KY2	KR1B, KR4R	KA1, KA1	Start-Stop
3	3 Push Buttons	**KYK31**	KY3	KR1B, KR1B, KR3R	KA1, KA1, KA1	Forward; Reverse; Stop
	3 Push Buttons (Lockout on Stop)	**KYK326**	KY3	KR1B, KR1B, KR3R, K4	KA1, KA1, KA1	Forward; Reverse; Stop
	3 Push Buttons (With Sealed Contacts & Lockout on Stop) *(4)*	**KYK322**	KY3	KR1B, KR1B, KR3R, K4	KA51, KA51, KA51	Forward; Reverse; Stop
	3 Push Buttons	**KYK33**	KY3	KR1B, KR1B, KR3R	KA1, KA1, KA1	Open; Close; Stop
	Red 120v Pilot Light, 2 Push Buttons	**KYK317**	KY3	KP1R31, KR1B, KR3R	KA2, KA3	Start; Stop
	3 Push Buttons	**KYK32**	KY3	KR1B, KR1B, KR3R	KA1, KA1, KA1	Up; Down; Stop
	3 Push Buttons (Lockout on Stop)	**KYK325**	KY3	KR1B, KR1B, KR3R, K4	KA1, KA1, KA1	Up ; Down; Stop
UL Types 1, 3, 4 and 13/NEMA 1, 3, 4 and 13—Stainless Steel (304) *(2)*						
1	Push Button (Momentary)	**KYSS101**	KYSS1	KR1B	KA1	Start
	Push Button (Momentary)	**KYSS103**	KYSS1	KR1B	KA3	Stop
	Selector Switch (2 Pos Maintained)	**KYSS110**	KYSS1	KS11B	KA1	Off-On
	Selector Switch (3 Pos Maintained)	**KYSS111**	KYSS1	KS43B	KA1	Hand-Off-Auto
2	2 Push Buttons	**KYSS201**	KYSS2	KR1B, KR3R	KA1, KA3	Start; Stop
	2 Push Buttons (Lockout on Stop)	**KYSS203**	KYSS2	KR1B, KR3R, K5	KA1, KA3	Start; Stop
	2 Push Buttons (Maintained with Interlock)	**KYSS210**	KYSS2	KR11U	KA1, KA1	Start; Stop
	2 Push Buttons	**KYSS205**	KYSS2	KR1B, KR1B	KA1, KA1	Up; Down
UL Types 1, 3, 4. 4X and 13/NEMA 1, 3, 4, 4X and 13—Stainless Steel (304) *(3)*						
1	Push Button (Momentary)	**KYSK101**	KYSS1	SKR1B	KA1	Start
	Push Button (Momentary)	**KYSK103**	KYSS1	SKR3R	KA3	Stop
	Selector Switch (2 Pos Maintained)	**KYSK110**	KYSS1	SKS11B	KA1	Off-On
	Selector Switch (3 Pos Maintained)	**KYSK111**	KYSS1	SKS43B	KA1	Hand-Off-Auto
2	2 Push Buttons	**KYSK201**	KYSS2	SKR1B, SKR3R	KA1, KA3	Start; Stop
	2 Push Buttons (Lockout on Stop)	**KYSK203**	KYSS2	SKR1B, SKR3R, K5	KA1, KA3	Start; Stop
	2 Push Buttons (Maintained with Interlock)	**KYSK210**	KYSS2	SKR11U	KA1, KA1	Start; Stop
	2 Push Buttons	**KYSK205**	KYSS2	SKR1B, SKR1B	KA1, KA1	Up; Down
UL Types 1, 3, 4. 4X and 13/NEMA 1, 3, 4, 4X and 13—Polymeric (Plastic) *(3)*						
1	Selector Switch (3 Pos Maintained)	**SKY111**	SKY1	SKS43B	KA1	Hand-Off-Auto
	Selector Switch (2 Pos Maintained)	**SKY110**	SKY1	SKS11B	KA1	Off-On
	Selector Switch (2 Pos Maintained with Sealed Contacts) *(4)*	**SKY122**	SKY1	SKS11B	KA51	Off-On
	Push Button (with Lockout)	**SKY105**	SKY1	SKR3R, K5	KA3	Stop
2	2 Push Buttons	**SKY201**	SKY2	SKR1B, SKR3R	KA1, KA3	Start-Stop
	2 Push Buttons (Lockout on Stop)	**SKY203**	SKY2	SKR1B, SKR1R, K5	KA1, KA3	Start-Stop
	2 Push Buttons (With Sealed Contacts) *(4)*	**SKY223**	SKY2	SKR1B, SKR3R	KA51, KA51	Start-Stop
	2 Push Buttons (With Sealed Contacts) *(4)*	**SKY222**	SKY2	SKR1B, SKR3R	KA51, KA51	On-Off
	2 Push Buttons	**SKY205**	SKY2	SKR1B, SKR1B	KA1, KA1	Up-Down
3	3 Push Buttons	**SKY302**	SKY3	SKR1B, SKR1B, SKR3R	KA1, KA1, KA3	Up-Down-Stop
	3 Push Buttons	**SKY303**	SKY3	SKR1B, SKR1B, SKR3R	KA1, KA1, KA3	Open-Close-Stop
	Red 120v Pilot Light, 2 Push Buttons	**SKY315A**	SKY3	SKP1R31, SKR1B, SKR3R	KA1, KA3	Start-Stop
UL Types 1, 3, 4 and 13/NEMA 1, 3, 4 and 13 Die Cast Zinc Enclosures with Integral Guard						
1	Guarded Enclosure (grey) with 120V Red LED Pilot Light	**KYG11**	KYG1	KP38LRR9	—	order separately
	Guarded Enclosure (grey) with 120V Green LED Pilot Light	**KYG12**	KYG1	KP38LGG9	—	order separately
	Guarded Enclosure (Yellow Cover) with Red Push-Pull Mushroom	**KYG1Y1**	KYG1Y	KR9R	KA3	Emergency Stop
	Guarded Enclosure (Yellow Cover) with Red Turn-To Release Mushroom	**KYG1Y2**	KYG1Y	KR16	KA3	Emergency Stop

(1) Uses 9001K metal operators and metal legend plates.
(2) Uses 9001K metal operators and plastic legend plates.
(3) Uses 9001SK plastic operators and plastic legend plates.
(4) Control Station components are UL listed for use in Class 1, Division 2, Groups A, B, C, or D.

Components: page 24
Dimensions: page 27

Schneider Electric

Harmony™ control stations and enclosures

9001KY/SKY 30 mm control stations

Dimensions

9001KY● and 9001TY● enclosures

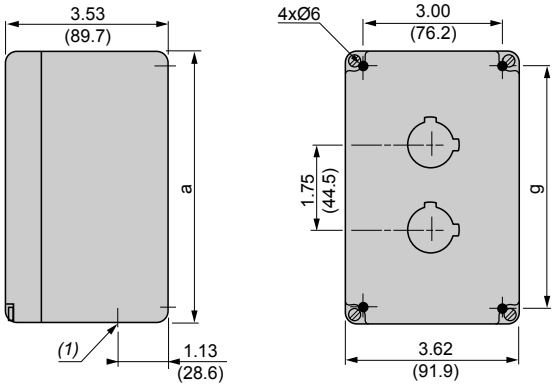

(1) Conduit thread: 9001KY●: 3/4 - 14 NPT 9001TY●: 14 mm.

	a: in (mm)	g: in (mm)
9001KY1, TY1	4.0 (101.6)	2.75 (69.9)
9001KY2, TY2 (as shown)	5.75 (146.1)	4.5 (114.3)
9001KY3, TY3	7.0 (177.8)	6.225 (158.8)
9001KY4, TY4	9.25 (235.0)	8.0 (203.2)

9001KYG1 and 9001TYG1 enclosures

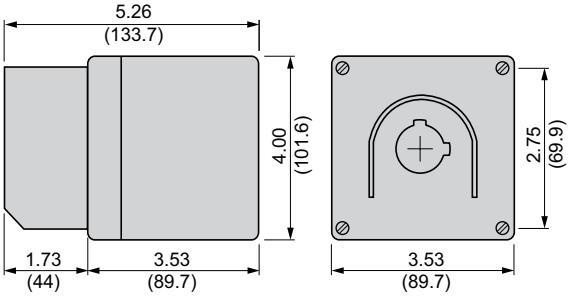

9001KYAF● and 9001KYSS● enclosures

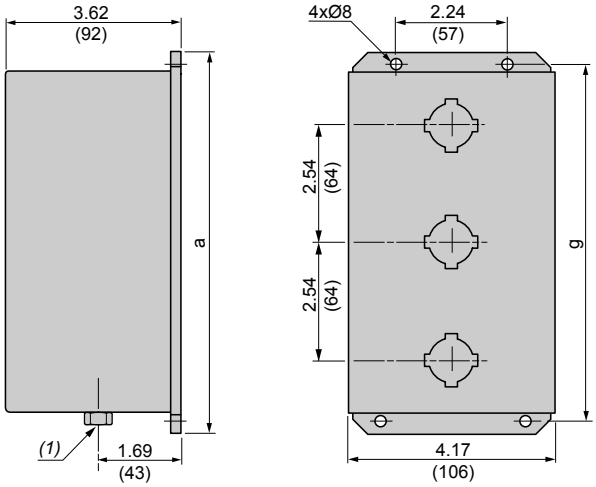

9001KYAF● and 9001KYSS●	a: in (mm)	g: in (mm)
9001KYAF1	4.45 (133)	4.61 (117)
9001KYAF2	7.76 (197)	7.13 (181)
9001KYAF3 (as shown)	10.24 (260)	9.61 (244)
9001KYAF4	12.76 (324)	12.13 (308)
9001KYSS1	4.45 (133)	4.61 (117)
9001KYSS2	7.76 (197)	7.13 (181)
9001KYSS3 (as shown)	10.24 (260)	9.61 (244)
9001KYSS4	12.76 (324)	12.13 (308)

(1) 9001KYSS● includes 3/4 - 14 NPT conduit hub.
9001KYAF is undrilled and does not include conduit hub.

9001SKY● enclosures

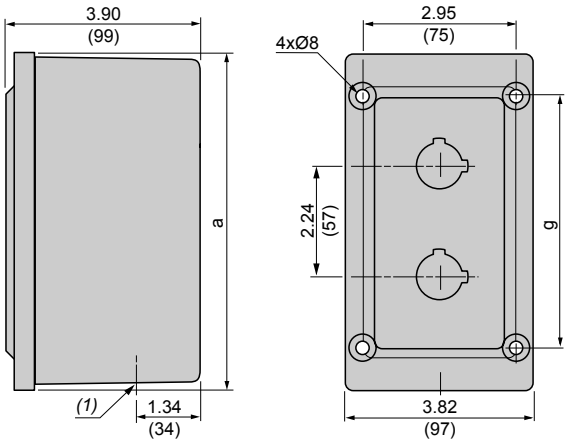

	a: in (mm)	g: in (mm)
9001SKY1	6.65 (169)	4.88 (124)
9001SKY2 (as shown)	6.65 (169)	4.88 (124)
9001SKY3	8.90 (226)	7.13 (181)

(1) Knockout conduit thread: 3/4".

Components:
page 24

References:
page 25

Harmony™ control stations and enclosures

Reference	Page
3110	
3110112001	20
B	
B101	20
B102	20
B103	20
B104	20
B105	20
B106	20
B107	20
B108	20
B109	20
B110	20
B111	20
B112	20
B115	20
B116	20
B117	20
B118	20
B119	20
B129	20
B129R	20
B161	20
B162	20
B175	20
B176	20
B189	20
B189R	20
B251	20
B252	20
B253	20
B254	20
B255	20
B256	20
B257	20
B258	20
B259	20
B260	20
B261	20
B262	20
B263	20
B264	20
B265	20
B266	20
B276	20
B277	20
B282	20
B283	20
B301	20
B303	20
B321	20
B331	20
B332	20
B341	20
B342	20
BF101	20
BF102	20
BF107	20
BF201	20
BF208	20
BF210	20
BF211	20
BF215	20
BF216	20
BF303	20
BF305	20
BF308	20
BFB107	20
BFB114	20
BFB123	20
BFB214	20
BFB224	20
BFB226	20
BG101	20
BG102	20
BG103	20
BG104	20
BG107	20
BG111	20
BG112	20
BG114	20
BG201	20
BG202	20
BG203	20
BG204	20
BG205	20
BG206	20
BG207	20
BG208	20
BG209	20
BG210	20
BG211	20
BG214	20
BG215	20
BG216	20
BG218	20
BG301	20
BG302	20
BG303	20
BG304	20
BG305	20
BG307	20
BG308	20
BG316	20
BGB107	20
BGB114	20
BGB123	20
BGB214	20
BGB224	20
BGB226	20
BGB307	20
BGB309	20
BGB315	20
BGC107	20
BGC114	20
BGC123	20
BGC214	20
BGC218	20
BGC224	20
BGC226	20
BGC307	20
BGC309	20
BGC313	20
BGC315	20
BOC107	20
BOC114	20
BOC123	20
BOC214	20
BOC218	20
BOC224	20
BOC226	20
BOC360	20
BOC361	20
BOC362	20
BR101	20
BR103	20
BR104	20
BR107	20
BR202	20
BR203	20
BR204	20
BR205	20
BR208	20
BR214	20
BR215	20
BR216	20
BR218	20
BW146	20
BW147	20
BW148	20
BW151	20
BW159	20
BW240	20
BW241	20
BW242	20
BW243	20
BW244	20
BW245	20
BW246	20
BW250	20
BW252	20
BW253	20
BW254	20
BW255	20
BW256	20
BW260	20
BWD219	20
BWD220	20
K	
K25	24
K26	24
K27	24
K28	24
KY	
KY1	24
KY2	24
KY3	24
KY4	24
KY6	24
KYAF1	24
KYAF2	24
KYAF3	24
KYAF4	24
KYAF6	24
KYG1	24
KYG11	25
KYG12	25
KYG1Y	24
KYG1Y1	25
KYG1Y2	25
KYK11	25
KYK110	25
KYK111	25
KYK116	25
KYK117	25
KYK13	25
KYK14	25
KYK15	25
KYK21	25
KYK218	25
KYK22	25
KYK223	25
KYK224	25
KYK23	25
KYK25	25
KYK26	25
KYK27	25
KYK31	25
KYK317	25
KYK32	25
KYK322	25
KYK325	25
KYK326	25
KYK33	25
KYSK101	25
KYSK103	25
KYSK110	25
KYSK111	25
KYSK201	25
KYSK203	25
KYSK205	25
KYSK210	25
KYSS1	24
KYSS101	25
KYSS103	25
KYSS110	25
KYSS111	25
KYSS2	24
KYSS201	25
KYSS203	25
KYSS205	25
KYSS210	25
KYSS3	24
KYSS4	24
KYSS6	24
SKY	
SKY1	24
SKY105	25
SKY110	25
SKY111	25
SKY122	25
SKY2	24
SKY201	25
SKY203	25
SKY205	25
SKY222	25
SKY223	25
SKY3	24
SKY302	25
SKY303	25
SKY315A	25
SKY4	24
SKY6	24
XAL	
XALD01	11
XALD02	11
XALD03	11
XALD04	11
XALD05	11
XALD101	10
XALD111	10
XALD164	10
XALD211	10
XALD221	10
XALD311	10
XALD321	10
XALD341	10
XALK01	11
XALK174	10
XALK178	10
XALK184	10
XALK188	10
XALK194	10
XALZ09	11
XAP	
XAPA1100	16
XAPA1104	17
XAPA1110	17
XAPA1120	17
XAPA2100	16
XAPA2108	17
XAPA3100	16
XAPA3116	17
XAPA4100	16
XAPE301	19
XAPE302	19
XAPE303	19
XAPE304	19
XAPE305	19
XAPE901	19
XAPE902	19
XAPE903	19
XAPE904	19
XAPE905	19
XAPG19100	18
XAPG19201	18
XAPG19400	18
XAPG19501	18
XAPG19702	18
XAPG19802	18
XAPG29100	18
XAPG29202	18
XAPG29400	18
XAPG29502	18
XAPG29703	18
XAPG29803	18
XAPG39100	18
XAPG39203	18
XAPG39400	18
XAPG39503	18
XAPG39704	18
XAPG39804	18
XAPG49400	18
XAPG49504	18
XAPG59400	18
XAPG59505	18
XAPZ100	16
XAPZ104	17
XAPZ110	17
XAPZ120	17
XAPZ200	16
XAPZ208	17
XAPZ300	16
XAPZ316	17
Z	
ZALVB1	11
ZALVB3	11
ZALVB4	11
ZALVB5	11
ZALVB6	11
ZALVG1	11
ZALVG3	11
ZALVG4	11
ZALVG5	11
ZALVG6	11
ZALVM1	11
ZALVM3	11
ZALVM4	11
ZALVM5	11
ZALVM6	11
ZB5AZ901	11
ZB5AZ905	11
ZB5SZ3	11
ZENL1111	11
ZENL1121	11

http://www.schneider-electric.us/

Schneider Electric USA, Inc.
8001 Knightdale Blvd.
Knightdale, NC 27545

USA Customer Care Center
Tel: 888-778-2733

Schneider Electric Canada
5985 McLaughlin Rd.
Missassauga, Ontario, Canada L5R 1B8

Canada Customer Care Center
Tel: 800-565-6699

The information and dimensions in this catalog are provided for the convenience of our customers. While this information is believed to be accurate, Schneider Electric reserves the right to make updates and changes without prior notification and assumes no liability for any errors or omissions.

Harmony, Schneider Electric and logo are trademarks or registered trademarks of Schneider Electric or its affiliates in the United States and other countries. Other trademarks used herein are the property of their respective owners.

Design: Schneider Electric
Photos: Schneider Electric

9001CT1104

© 2011 Schneider Electric. All rights reserved.

05/2011