# Motor Control Solutions
## for the North American Market

Data Bulletin

8536DB0901

Rev. 11/11, 1/2013

**Retain for future use.**




Schneider Electric™

# Table of Contents

**Introduction** ..... 4

**Overview of U.S. Standards and Regulations** ..... 4

Certification Process ..... 54
Acceptance of Electrical Equipment in the U.S. ..... 4

**Structure of a Motor Starter in Accordance with UL508A** ..... 5

Feeder Circuits and Branch Circuits ..... 5
Group Motor Installations ..... 6
Required Functions of Combination Starters ..... 7

**Combination Starter Construction Types** ..... 8

Disconnecting Means on a Feeder or Branch Circuit ..... 11
Motor Starter Line Diagrams ..... 11

**Disconnecting Means** ..... 11

Industrial Machinery requirements (NFPA79 Section 5.3.3.1 and UL508A Section 65, 66) ..... 12

**SCCR requirement in UL508A** ..... 13

Ratings: Tested Combination vs. Component ..... 13
UL508A Support Websites ..... 14

**Combination Starter Components** ..... 15

UL98 Manual Disconnect Switches ..... 15
TeSys™ GS Disconnect Switches ..... 15
Class 9422 Disconnect Switches ..... 16
UL248 Fuses ..... 16
TeSys DF Fuse Holder ..... 16
Type FB Fuse Holder ..... 16
UL489 Molded-Case Circuit Breakers ..... 17
PowerPact Circuit Breakers and Motor Circuit Protectors ..... 17
UL508 Contactors ..... 18
TeSys K, D and F Contactors ..... 18
Type S Contactors ..... 23
Definite Purpose Contactors ..... 24
UL508 Overload Relays ..... 26
TeSys K, D and F Overload Relays ..... 26
TeSys T Motor Management System ..... 28
UL508 Starters ..... 29
Type S Starters ..... 29
Definite Purpose Starters ..... 29
UL508 Self-Protected Combination Motor Controller ..... 30
TeSys U ..... 30
UL508 Manual Self-Protected Combination Motor Controller ..... 30
TeSys GV ..... 30

**Combination Starter Solutions** ..... 31

UL508 Type A ..... 31
UL508 Type B ..... 31
UL508 Type C ..... 31
UL508 Type D ..... 32
UL508 Type E ..... 33
UL508 Type F ..... 33


© 2013 Schneider Electric All Rights Reserved

**Group Motor Installations** ..... 6

UL508 Group Motor Installations ..... 35
TeSys™ GV ..... 30

**Short Circuit Protection for Drives** ..... 37

Altivar™ 12 ..... 37
Altivar 32 ..... 38
Altivar 212 ..... 39
Altivar 312 ..... 41
Altivar 61 ..... 44
Altivar 71 ..... 47

**Short Circuit Protection for Soft Starters** ..... 50

Altistart™ 22 ..... 50
Altistart 48 ..... 53

**Specific Requirements for the Canadian Market** ..... 54

Installation and Product Standards ..... 54
Certification Process ..... 54
Technical Differences between Canadian and U.S. Standards ..... 54

**Full-Load Current, Three-Phase Alternating-Current Motors** ..... 55

© 2013 Schneider Electric All Rights Reserved

# Introduction

Schneider Electric offers a wide range of solutions to meet your motor control and protection needs. This data bulletin contains information regarding the application of those solutions in the United States and Canada.

# Overview of U.S. Standards and Regulations

Figure 1 outlines the national standards governing electrical installations in the U.S.:

**Figure 1: Standards**

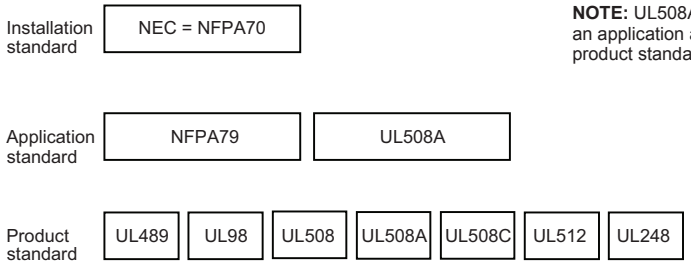


- National Electrical Code® (NEC), NFPA70: Electrical Installation
- NFPA79: Electrical Standard for Industrial Machinery
- UL508A: Industrial Control Panel
- UL489: Molded-Case Circuit Breaker, Molded-Case Switches
- UL508: Industrial Control Equipment
- UL508C: Power Conversion Equipment
- UL98: Enclosed and Dead-Front Switches
- UL512: Fuse Holders
- UL248: Low Voltage Fuses

## Certification Process

A nationally recognized testing laboratory (NRTL) can list or certify the equipment according to applications or product standards including the following: UL, CSA, ETL, TUV. Other approved products are listed at the following website: http://www.osha.gov/dts/otpca/nrtl/index.html#nrtls.

## Acceptance of Electrical Equipment in the U.S.

The process for acceptance is as follows:

1. The equipment is listed or the manufacturer is certified:
   a. For mass production equipment, the industrial control panel itself is listed by an NRTL.
   b. For custom or low-volume equipment, the manufacturer or supplier of the industrial control panel is certified.
2. A local inspector under the authority having jurisdiction (AHJ) inspects and approves the electrical equipment and the installation prior to commissioning. The product listing or labeling may be used to assist in the inspection.


© 2013 Schneider Electric All Rights Reserved

# Structure of a Motor Starter in Accordance with UL508A

## Feeder Circuits and Branch Circuits

The feeder circuit includes all power conductors and components from the incoming feeder disconnect to the line side of the last branch short-circuit protection device (SCPD).

The branch circuit includes all power conductors and components from the load side of the branch circuit SCPD to the controller load-side connections.

Each branch circuit should be protected by its own disconnect and SCPD.

**Figure 2: Feeder Circuit and Branch Circuit**

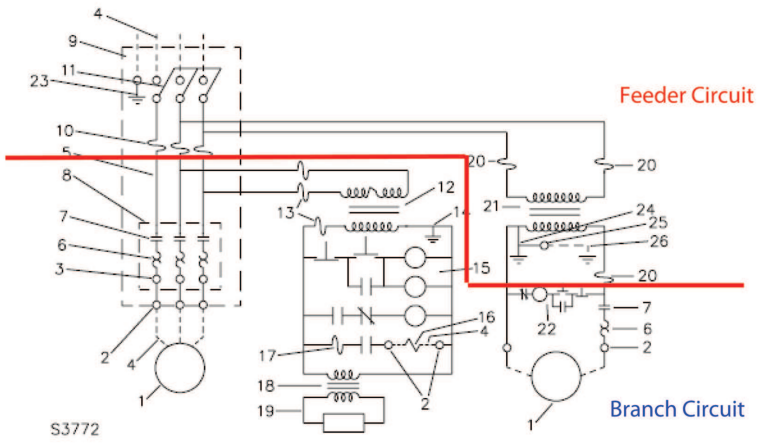


Table 1 contains a description of the numbered circuit components called out in Figure 2.

**Table 1: Circuit Components**

| | | | |
|---|---|---|---|
| 1 | Load—provided in the field | 14 | Control transformer ground (for 1000 VA max. control transformer) |
| 2 | Field wiring terminals | 15 | Control circuit devices and wiring—Class 1 circuit—isolated secondary circuit |
| 3 | Alternate field terminals | 16 | Solenoid or other control device—provided in the field |
| 4 | Field wiring | 17 | Supplementary protection |
| 5 | Internal wiring of the power circuit | 18 | Class 2 transformer |
| 6 | Overload relay and heater elements | 19 | Class 2 circuit |
| 7 | Contactor or controller | 20 | Power transformer fuse—branch circuit protection |
| 8 | Starter | 21 | Power transformer—for motor load and control protector |
| 9 | Combination motor controller | 22 | Control circuit—Class 1 circuit—common control circuit |
| 10 | Branch circuit protection | 23 | Equipment ground and equipment ground terminal |
| 11 | Fused disconnect switch or circuit breaker | 24 | Bonding conductor—bonding jumper |
| 12 | Control transformer | 25 | Grounding electrode conductor terminal |
| 13 | Control transformer fuse or supplementary protection | 26 | Grounding electrode conductor—provided in the field |

© 2013 Schneider Electric All Rights Reserved

## Group Motor Installations

In a group motor installation, a single disconnecting means and SCPD can be used for a group of motors. The specific rules are described in NEC Sections 430-112 and 430-53.

Group motor installations are used in the following applications:

- Fractional hp motors—NEC Section 430.53 (A):

  For several motors, each rated 1 hp maximum on a branch circuit of 600 V maximum, a single SCPD not exceeding 15 A is permitted under the following circumstances:

  — No single motor is rated greater than 6 A.

  — The branch short-circuit device rating marked on any controller (UL508 circuit breaker, switch or contactor) is not exceeded.

  — Appropriate motor overload protection is used.

- Smallest rated motor protected—NEC Section 430.53 (B):

  The SCPD is sized for the motor in the group with the lowest rating.

- Other group installations—NEC Section 430.53 (C):

  Two or more motors of any rating, or one or more motors and other loads, where all the following conditions are met:

  — Each motor controller and overload protection device carries a Motor Group Installation listing.

  — Each circuit breaker (if used) is listed and is of the inverse time type.

  — The SCPD (fuse or circuit breaker) is sized for the largest motor plus the sum of all other motors and loads.

  — The sizing of the SCPD (fuse or circuit breaker) does not exceed the maximum allowed for overload protection of the smallest motor.

  — Appropriate overcurrent protection is provided for non-motor loads.

### Tap Conductor Sizing Rules

The tap conductor sizing rules for group motor installations are governed by NEC Section 430.53 (D). Conductors from the load side of the SCPD for the motor group must comply with one of the following:

- The ampacity is not less than that of the branch circuit conductors.
- The ampacity is not less than 1/3 of the branch circuit conductors, and the length is not more than 7.5 m (25 ft).
- The ampacity is not less than 1/10 of the SCPD for the motor group, the length is not more than 3 m (10 ft), and the manual motor controller is marked “Suitable for Tap Conductor Protection in Group Installations.”

**NOTE:** Products certified for motor grouping must carry the markings on the product label or instruction sheet required by NEC and UL (such as “Suitable for Tap Conductor Protection in Group Installations”).

For more information, see data bulletin #8502DB0701 entitled “Group Motor Installations: Understanding NEC 430.53 Requirements.”


© 2013 Schneider Electric All Rights Reserved

# Required Functions of Combination Starters

Combination starters are the most common type of packaged motor controllers. They are called *combination* because of their construction and combined functions. NEC Article 430 defines the required functions of combination starters. Underwriters Laboratories, Inc.® (UL) specifies the tests and verifications that the components must pass before they can be listed as suitable for use for those functions.

See Figure 3 for the four component functions that compose a complete motor branch circuit as defined by the NEC.

**Figure 3: Required Functions of Combination Starters**

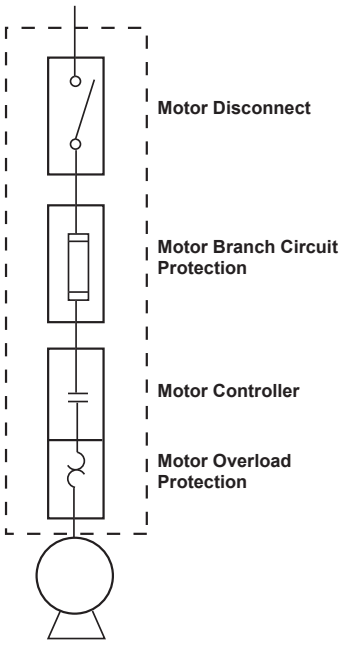


© 2013 Schneider Electric All Rights Reserved

# Combination Starter Construction Types

UL 508 is the UL safety standard for industrial control equipment. Part IV defines the component functions, construction, testing, and performance requirements of six styles of combination starters. Each of these six styles meets the requirements of NEC Article 430 for the motor disconnecting means, the motor branch circuit short-circuit and ground-fault protection, the motor controller, and the motor overload (OL) protection. Each provides adequate protection against fire or personal injury under detected fault conditions.

The UL 508 type designations are differentiated by the actual components used to protect the motor branch circuit. See Table 2.

**Table 2: UL Combination Starter Type Designations**

<table>
<tr><th rowspan="2"></th><th rowspan="2">UL Combination Starter Type</th><th colspan="3">Device Used for Component Function</th><th rowspan="2"></th></tr>
<tr><th>Disconnect</th><th>Branch Circuit Protection</th><th>Motor Controller</th><th>Motor OL Relay</th></tr>
<tr><td rowspan="4">Traditional Combination Starters from the 1980s and earlier</td><td>A</td><td rowspan="2">UL 98 Manual Disconnect</td><td>UL 248 Fuses</td><td rowspan="4">UL 508 Magnetic or Solid State Controller</td><td rowspan="4">UL 508 Motor Overload Relay</td><td rowspan="2"><br>UL 98 Disconnect Switch<br>UL 248 Fuses<br>UL 508 Controller<br>UL 508 Overload Relay</td></tr>
<tr><td>B</td><td>UL 508 Motor Short Circuit Protector</td></tr>
<tr><td>C</td><td colspan="2">UL 489 Inverse Time Circuit Breaker</td><td rowspan="2"><br>UL 489 Circuit Breaker<br>UL 508 Controller<br>UL 508 Overload Relay</td></tr>
<tr><td>D</td><td colspan="2">UL 489 Instantaneous Trip Circuit Breaker</td></tr>
<tr><td>Recognized 1990</td><td>E</td><td colspan="3">UL 508 Self-Protected Combination Controller</td><td><br>UL 508 Type E Self-Protected Combination Starter: TeSys U<br><br>UL 508 Type E Manual Self-Protected Combination Starter: TeSys GV2P & GV3P</td></tr>
<tr><td>Recognized 2002</td><td>F</td><td colspan="2">UL 508 Manual Self-Protected Combination Controller</td><td>UL 508 Magnetic or Solid State Controller</td><td>UL 508 Manual Self-Protected Combination Controller</td><td><br>UL 508 Type F Combination Starter: TeSys GV2P/GV3P + TeSys D Contactor</td></tr>
</table>


© 2013 Schneider Electric All Rights Reserved

## UL Combination Starter Types A through D

UL 508 Types A through D combination starters are traditional style starters that use either a listed disconnect switch and fuses or a listed circuit breaker as the disconnect means and short circuit protection. Each type uses a separate UL 508 listed motor controller and overload relay. These starters are evaluated by UL under the same set of short circuit performance tests. Each type of combination starters clears detected faults without causing a fire or posing an electrical shock hazard to personnel. Each type is allowed to sustain damage that is contained within enclosures and may require the repair or replacement of devices after performing their protective function.

## UL Combination Starter Type E

The concept of a self-protected combination starter was introduced from Europe during the 1980's. This concept unveiled an integrated device that performed all the required functions of a combination starter.

The first self-protected combination starters were manual, but by the mid-1980s, electromechanical self-protected combination starters were also on the market. These starters cleared detected faults within their rating without sustaining damage and could be put back into operation.

UL recognized this concept in 1990 and added the Type E self-protected category for both manual and electromechanical combination starters. UL added a separate set of short circuit and endurance performance tests to their 508 standard just for the Type E self-protected category.

## UL Combination Starter Type F

Many manufacturers and users started combining a manual UL 508 Type E self-protected starter with a UL 508 contactor and called the combination "self-protected." This is not an accurate description since the combination was not tested in accordance with the requirements of the UL 508 Type E standard as a combination.

UL addressed this by recognizing a Type F category in 2002. This combination starter consisted of the manual self-protected starter and contactor combination. It is evaluated under the same short circuit tests as Types A through D, but it is not considered self-protected.

© 2013 Schneider Electric All Rights Reserved

## Self-Protected Designation and Implications

A combination starter must pass certain performance tests specified by UL 508 before it can be designated as self-protected. The required test sequence for the Type E self-protected combination starters is listed in UL 508, Table 77.4A. The test sequence includes both high fault and interrupting ability short circuit (low fault) detection tests, followed by an endurance test.

The tests required for Types A through D and Type F combination starters are listed in UL 508 Table 77.4. This test sequence does not include the detection of low fault short circuit tests followed by the endurance test. This is the difference between the testing and performance of a Type E self-protected combination starter and the starter types.

## Construction Type Selection

Panel designers may choose any of the six construction types for their motor control panel with each construction type offering different advantages.

Construction Types A through D all utilize the same motor controllers and overload relays. However, they feature different methods to perform disconnect and branch circuit protection functions:

- Construction Type A is the only construction type that features fuses.
- Type B, which uses an UL 508 motor short circuit protector, is no longer commercially available.
- Type C utilizes UL 489 inverse time circuit breakers.
- Type D utilizes UL 489 instantaneous trip circuit breakers.

The key distinction between Type A and Type C or D can be simplified to the selection of a circuit breaker or a fuse for branch circuit protection. A fuse is an overcurrent protection with a circuit opening fusible part that is heated and severed by the passage of overcurrent through it. A circuit breaker is a device designed to open and close a circuit by non-automatic means and to open the circuit automatically on a predetermined overcurrent without damage to itself when properly applied within its rating. The key difference between a fuse and a circuit breaker is that a fuse must be replaced once it experiences an overcurrent condition while a circuit breaker is resettable. Additionally, fuses operate independently on each phase while circuit breakers have three-phase common trip.

Construction Type E self-protected combination controllers and Type F combination controllers both offer the following advantages for panel designers:

- Higher coordinated short-circuit withstand ratings on UL 508A panels
- Easier component selection to meet the requirements of group motor applications
- Reduced panel space by reducing the number of components
- Required product markings to help designers quickly and accurately select components
- Increased productivity by reducing the number of wiring connections

UL 508 Type E self-protected combination starters also offer the advantage of reliability. UL 508's special endurance and short-circuit tests ensure a coordinated combination starter that will clear a detected fault and protect itself from damage. It is the only category of combination starter that a designer can easily identify as self-protected due to the required “Self-Protected Combination Motor Controller” product marking.


© 2013 Schneider Electric All Rights Reserved

## Disconnecting Means on a Feeder or Branch Circuit

The disconnecting means on the feeder circuit, ahead of the last SCPD, must be a UL98 disconnect switch or UL489 circuit breaker. UL508 switches or motor protectors are not acceptable.

On the branch circuit, the following are permitted as the disconnecting means when installed between the final motor branch circuit short circuit protection and the motor:

- Any UL508 switch that is suitable as a motor disconnect (according to NEC Section 430.81), which is used to start and stop a motor
- A manual motor controller that is suitable as a motor disconnect (according to NEC Section 430.109)

## Motor Starter Line Diagrams

**Figure 4: Power Supply Circuit**

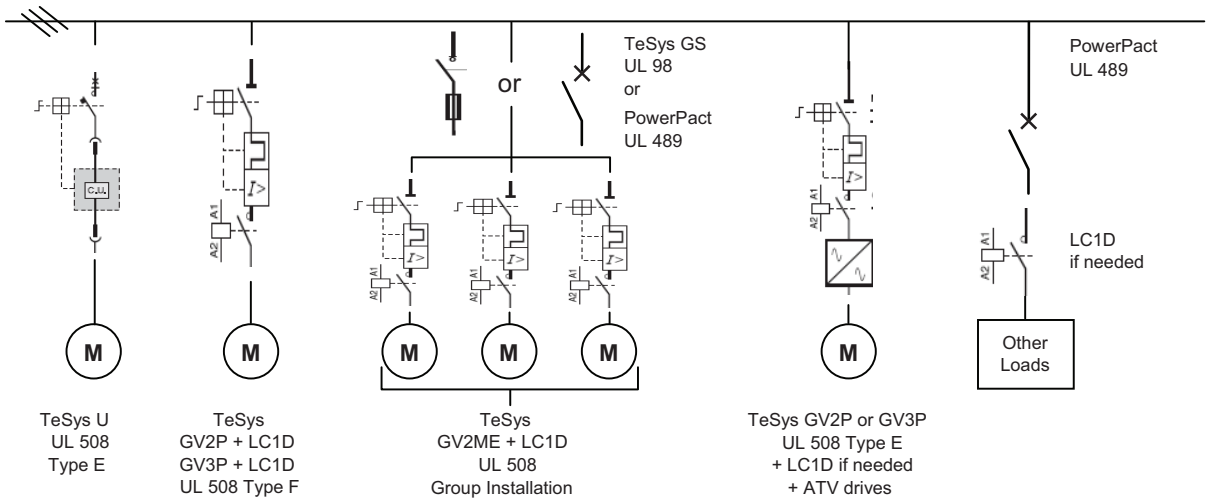


© 2013 Schneider Electric All Rights Reserved

# Disconnecting Means

A disconnecting means must be provided for each incoming supply (branch) circuit, and must open each ungrounded conductor of the supply circuit.

The disconnecting means may be one of the following:

- UL489 inverse-time or instantaneous-trip circuit breaker
- UL489 molded-case switch
- UL98 switch unit, either open type or enclosed

For a motor starter, the disconnecting means could be a UL508 Type E self-protected combination motor controller.

The sizing of the disconnecting means must meet UL508A Section 30.2.

An UL508 manual motor controller or switch (such as the TeSys™ Vario device) is certified for use on the load side of a motor's branch circuit protection. This is commonly called a *load break switch*.

## Industrial Machinery Requirements (NFPA79 Section 5.3.3.1 and UL508A Section 65, 66)

These requirements cover industrial control panels for industrial machinery (NFPA 79-2002, Electrical Standard for Industrial Machinery). The following types of machines are identified as industrial machinery:

- Metalworking machine tools, including machines that cut or form metal
- Plastics machinery, including injection molding, extrusion, blow molding, specialized processing, thermoset molding, and size reduction machines
- Wood machinery, including woodworking, laminating, and sawmill machines
- Assembly machines
- Material handling machines, including industrial robots and transfer machines
- Inspection and testing machines, including coordinate measuring and in-process gauging machines

An operating mechanism for the disconnecting means must have the following characteristics:

- Readily accessible when the enclosure doors are in the open or closed position
- Installed so that its operation is not restricted by the enclosure door while in the open position
- Operable independent of the door position without the use of accessory tools or devices
- Lockable in the Off position independent of the door position; and, when the mechanism is locked, the disconnect cannot be closed

The UL98 TeSys GS disconnect switches meet these characteristics:

- The TeSys GS1 disconnect switch requires the use of operating mechanism GS1AD010 and GS1AD020.
- The TeSys GS2 disconnect switch provides these features (coming soon).

The UL489 PowerPact Circuit breakers meet these characteristics when used in conjunction with a Class 9422 or 9421L operating mechanism and 9421LH79 handle.


© 2013 Schneider Electric All Rights Reserved

# SCCR requirement in UL508A

NEC Article 409, NFPA 79, and UL508A require that the SCCR be marked on all control panels.

The final builder or assembler of the equipment inside the panel is responsible for providing the SCCR for the overall panel, determined by one of the following three options:

- Testing each panel construction and recording the construction in the follow-up procedure. With the multitude of possible product combinations within a panel, this option may require much testing and maintenance. Third party testing and certification may also be required.
- Purchasing previously tested constructions (combinations) from a major supplier of equipment that can be tabulated in the control or machine panel builder's procedure. Once you have all the component ratings, either use an outside service or UL 508A, Supplement SB.
- Using a method described in UL 508A, Supplement SB

**NOTE:** Using the interrupting rating of the main OCPD for the panel is not an acceptable practice.

**⚠ WARNING**

**INADEQUATE SHORT CIRCUIT INTERRUPTING RATING**

Do not use the interrupting rating of the main OCPD as the SCCR rating for the controller.

**Failure to follow these instructions can result in death, serious injury, or equipment damage.**

## Ratings: Tested Combination vs. Component

UL508A, Supplement SB describes three steps to determine the SCCR of an industrial control panel. One of those steps is to determine the SCCR of all the individual power panel components using one of the following methods:

- Use the SCCR value marked on the component.
- Use assumed SCCRs in Table SB4.1 of Supplement SB.
- Use the tested SCCR from component combinations per UL508.

Method 1 is often called component rating. Component rating involves looking at each individual component in the circuit and applying the lowest component rating to the overall system.

Method 2 uses Table SB4.1 (see Table 3) of Supplement SB, which applies a blanket maximum SCCR for all components. The SCCR for motor controllers is graduated based on its horsepower rating.

**Table 3: Extract of Table SB4.1**

| Component | Short Circuit Current Rating |
|---|---|
| Motor controllers (rated in hp) | |
| a. 0–50 | 5 kA |
| a. 51–200 | 10 kA |
| b. 201–400 | 18 kA |
| c. 401–600 | 30 kA |
| d. 601–900 | 42 kA |
| e. 901–1500 | 85 kA |

© 2013 Schneider Electric All Rights Reserved

Method 3 is often called tested combination rating. Individual motor branch circuit components are tested together in specific combinations to achieve a system rating. This system rating is not specifically limited by each individual component rating.

It is important to note that use of one method only is not required. It is very common to find systems that utilize two, if not all three, methods for determinging SCCRs.

Component SCCR ratings offer the user of power control products a great deal of flexibility in the application of these products. A component SCCR rating for a contactor and overload relay typically calls for a maximum circuit breaker size which is not tied to a specific part number or combination of multiple specific part numbers. A similar scenario exists when using fuses for short circuit protection of a power control product. A fuse class and maximum size are what's called for, not a specific fuse or fuse holder; part numbers are not necessary. The component ratings for Schneider Electric contactors, overload relays, and motor starters are printed on the product labels and/or the product instruction sheets.

## UL508A Support Websites

Schneider Electric offers UL508A support on our website at www.Schneider-Electric.us. A number of educational and product search tools are available on the website, including overview information, a UL 508A SCCR determination flow chart, or information on our individual or combination product SCCRs. The UL also publishes SCCR tested combination ratings on its website. Schneider Electric's updated tested combination ratings can be found on both websites and is free to download.

**Schneider Electric's UL508A Support Website:**
http://www.schneider-electric.us/sites/us/en/support/product-support-resources/ul-508a-support/ul-508a-support.page

(In the "What's New" area, select "Fully UL508A Tested and Approved Combination Spreadsheets Now Available.")

**UL's UL508A Combination Motor Controller Website**:
http://www.ul.com/global/eng/pages/offerings/industries/powerandcontrols/industrialcontrolequipment/


© 2013 Schneider Electric All Rights Reserved

# Combination Starter Components

## UL 98 Manual Disconnect Switches

### TeSys™ GS Disconnect Switches



TeSys GS Disconnect Switch
GS1DU3

**Table 4: TeSys GS Fusible Disconnect Switches**

| Catalog Number | Ampere Rating (A) | Horsepower Rating (hp) | | | | SCCR@ 600 Vac (kA) | Fuse Type | UL Type |
|---|---|---|---|---|---|---|---|---|
| | | 3Ø Vac | | | Vdc | | | |
| | | 240 | 480 | 600 | 250 | | | |
| GS1DDU3 | 30 | 7.5 | 15 | 20 | 5 | 100 | CC | 489 |
| GS1DU3 | 30 | 7.5 | 15 | 20 | 5 | 100 | J | 98 |
| GS2GU3N | 60 | 15 | 30 | 50 | 10 | 200 | J | 98 |
| GS2JU3N | 100 | 30 | 60 | 75 | 20 | 200 | J | 98 |
| GS2MU3N | 200 | 60 | 125 | 150 | 40 | 200 | J | 98 |
| GS2QU3N | 400 | 125 | 250 | 350 | 50 | 200 | J | 98 |
| GS2SU3 | 600 | 200 | 400 | 500 | — | 200 | J | 98 |
| GS2TU3 | 800 | 250 | 500 | 500 | — | 200 | L | 98 |



TeSys LK
Disconnect Switch
LK4GU3

**Table 5: TeSys LK Non-Fusible Disconnect Switches**

| Catalog Number | Ampere Rating (A) | Horsepower Rating (hp) | | | | SCCR @ 600 Vac (kA) | Fuse Type |
|---|---|---|---|---|---|---|---|
| | | 3Ø Vac | | | Vdc | | |
| | | 240 | 480 | 600 | 250 | | |
| LK4DU3CN | 30 | 10 | 20 | 30 | — | 100 | J |
| LK4GU3CN | 60 | 20 | 40 | 50 | — | 100 | J |
| LK4JU3N | 100 | 30 | 75 | 100 | 15 | 200 | J |
| LK4MU3N | 200 | 75 | 150 | 200 | 15 | 200 | J |
| LK4QU3N | 400 | 125 | 250 | 350 | 50 | 200 | J |
| LK4SU3N | 600 | 200 | 400 | 350 | 50 | 200 | J |
| LK4TU3N | 800 | 200 | 500 | 500 | — | 100 | L |
| LK4UU3N | 1000 | 200 | 500 | 500 | — | 100 | L |
| LK4WU3N | 1200 | 200 | 500 | 500 | — | 100 | L |

© 2013 Schneider Electric All Rights Reserved

## Class 9422 Disconnect Switches

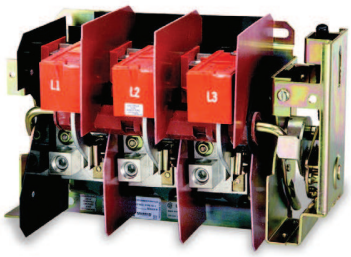

Flange Mountd, Variable Depth Disconnect Switch 9422TF1

**Table 6: Class 9422 Flange Mounted, Variable Depth Disconnect Switches**

| Disconnect Switch Size (A) | Horsepower Ratings | | | | | | Fuse Type | Fuse Clip Rating (A) Non-Interchangeable Type for Class H, J, K or R Fuses | | Catalog Number [1] |
|---|---|---|---|---|---|---|---|---|---|---|
| | 3Ø Vac | | | | Vdc | | | | | |
| | 208 | 240 | 480 | 600 | 250 | 600 | | 250 V | 600 V | |
| 30 | 7.5 | 7.5 | 15 | 20 | 5 | 15 | None | — | — | 9422TCN30 |
| | | | | | | | H, J, K, R | 30<br>60 | —<br>30 | 9422TCF30<br>9422TCF33 |
| 60 | — | 15 | 30 | 50 | 10 | 30 | None | — | — | 9422TDN60 |
| | | | | | | | H, J, K, R | 60<br>— | 30<br>60 | 9422TDF60<br>9422TDF63 |
| 100 | 25 | 30 | 60 | 75 | 20 | 50 | None | — | — | 9422TEN10 |
| | | | | | | | H, J, K, R | 100 | 100 | 9422TEF10 |
| 200 | 40 | 60 | 125 | 150 | 40 | 50 | None | — | — | 9422TF1 |
| | | | | | | | H, J, K, R | 200<br>— | 200<br>400 | 9422TF2<br>9422TF3 [2] |
| 400 | 75 | 125 | 250 | 350 | 50 | 50 | None | — | — | 9422TG1 [3, 4] |
| | | | | | | | H, J, K, R | 400 | 400 | 9422TG2 [3, 4] |

[1] Switch and operating mechanism only — does not include handle mechanism
[2] Accommodates Class J fuses only
[3] Commercially available enclosures may not accept 9422TG1 and 2 operating mechanisms. Contact enclosure manufacturer for availability of enclosures of use with these switches.
[4] Right hand flange mounting only and requires a special enclosure

# UL 248 Fuses

## TeSys™ DF Fuse Holder

**Table 7: TeSys DF Fuse Holders**

| Fuse Holder | Standards | Maximum Voltage | Current | Withstand |
|---|---|---|---|---|
| DFCC | IEC, UL (UL Listed) | 600 Vac | 30 A | 200 kA |
| DF10 | IEC, UL (UL Recognized) | 690 Vac | 33 A | 200 kA |
| DF14 | IEC, UL (UL Recognized) | 690 Vac | 50 A | 200 kA |
| DF22 | IEC, UL (UL Recognized) | 690 Vac | 125 A | 200 kA |

## Type FB Fuse Holder

**Table 8: Type FB 600 V Fuse Holders**

| Rating (A) | No. of Poles | Fuse | Catalog Number |
|---|---|---|---|
| 30 | 1 | Class R | 9080FB1611R |
| | 2 | Class R | 9080FB2611R |
| | | Class J | 9080FB2611J |
| | 3 | Class R | 9080FB3611R |
| | | Class J | 9080FB3611J |
| 60 | 1 | Class R | 9080FB1621R |
| | 2 | Class J | 9080FB2621J |
| | 3 | Class R | 9080FB3621R |
| | | Class J | 9080FB3621J |
| 100 | 3 | Class R | 9080FB3631R |


© 2013 Schneider Electric All Rights Reserved

# UL 489 Molded-Case Circuit Breakers

## PowerPact Circuit Breakers and Motor Circuit Protectors

**Table 9: PowerPact Catalog Numbering System**

| Frame | Rating | Termination | Poles | Voltage | Amperage | Suffix Code | Suffix Code |
|---|---|---|---|---|---|---|---|
| H | G | L | 3 | 6 | 150 | AB | SA |

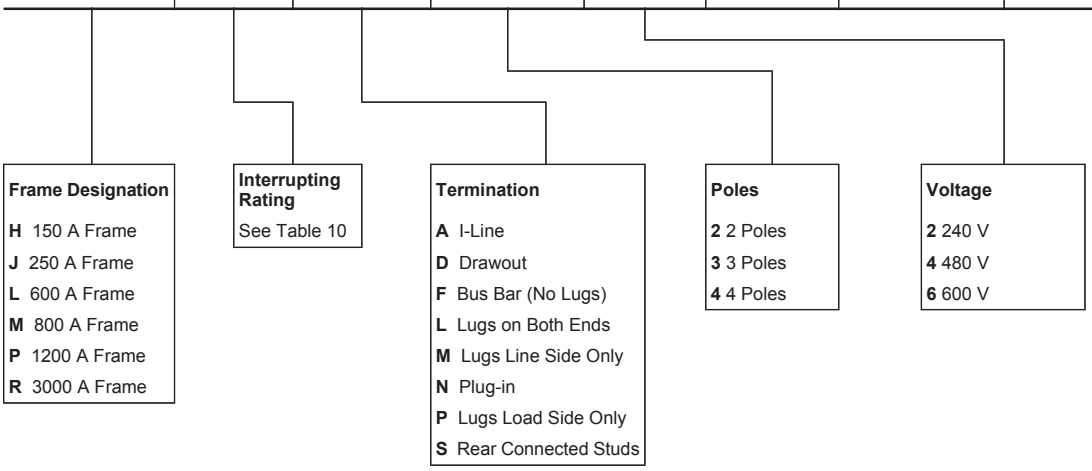


**Table 10: PowerPact Interrupting Ratings System**

| Voltage | Interrupting Rataing | | | | | |
|---|---|---|---|---|---|---|
| | D | G | J | K | L | R |
| 240 Vac | 25 kA | 65 kA | 100 kA | 65 kA | 125 kA | 200 kA |
| 480 Vac | 18 kA | 35 kA | 65 kA | 65 kA | 100 kA | 200 kA |
| 600 Vac | 14 kA | 13 kA | 25 kA | 65 kA | 50 kA | 100 kA |
| **Frame ( X = available)** | | | | | | |
| H-Frame (15-150 A) | X | X | X | | X | X |
| J-Frame (150-250 A) | X | X | X | | X | X |
| L-Frame (200-600 A) | X | X | X | | X | X |
| M-Frame (300-800 A) | | X | X | | | |
| P-Frame (250-1200 A) | | X | X | X [1] | X [2] | |
| R-Frame (600-3000 A) | | X | X | X | X | |

[1] P-Frame K-interrupting level is 50kA at 480 Vac and 600 Vac
[2] P-Frame L-interrupting level is 25kA at 600 Vac

© 2013 Schneider Electric All Rights Reserved

**Table 11: PowerPact H- and J-Frame Electronic Motor Circuit Protectors (MCP)**

| Frame | Current | Full Load (A) | Adjustable Instantaneous | Suffix | J Interrupting | L Interrupting |
|---|---|---|---|---|---|---|
| | | | | | Cat. No. | Cat. No. |
| H-Frame | 30 A | 1.5–25 A | 9–325 A | M71 | HJL36030M71 | HLL36030M71 |
| | 50 A | 14–42 A | 84–546 A | M72 | HJL36050M72 | HLL36050M72 |
| | 100 A | 30–80 A | 180–1040 A | M73 | HJL36100M73 | HLL36100M73 |
| | 150 A | 58–130 A | 348–1690 A | M74 | HJL36150M74 | HLL36150M74 |
| J-Frame | 250 A | 114–217 A | 684–2500 A | M75 | JJL36250M75 | JLL36250M75 |

# UL508 Contactors

## TeSys™ K Contactors

**Table 12: TeSys K Contactors**

| Catalog Number | Standard Motor Ratings @ 50/60 Hz (hp) | | | | | | Max. Inductive AC3 Current (A) | Max. Resistive AC1 Current (A) | Max. Component SCCR (kA) [1] | |
|---|---|---|---|---|---|---|---|---|---|---|
| | 1 Ø | | 3 Ø | | | | | | Circuit Breakers @ 480 V [2] | Fuses @ 600 V [3] |
| | 120 V | 240 V | 208 V | 240 V | 480 V | 600 V | | | | |
| LC1K06 | 0.5 | 1.5 | 1.5 | 1.5 | 3 | 3 | 6 | 15 | 65 | 100 |
| LC1K09 | 0.5 | 1.5 | 2 | 3 | 5 | 5 | 9 | 20 | 65 | 100 |
| LC1K12 | 0.5 | 1.5 | 3 | 3 | 7.5 | 10 | 12 | 20 | 65 | 100 |

[1] Ratings apply to circuits with voltages no greater than those listed.
[2] When protected by any circuit breaker, including thermal-magnetic and magnetic.
[3] When protected by any Class J or CC time-delay fuse meeting the size limites in Table 13.
**NOTE:** This table lists the maximum SCCR of the component when protected by any circuit breaker or fuse. If the maximum component SCCR is 65 kA and a 25 kA rated circuit breaker is used, then the system will be 25 kA as the circuit breaker becomes the weakest link.



**TeSys K Contactor LC1K09**

**Table 13: TeSys K Contactor Maximum Component SCCR [1]**

| Catalog Number | Circuit Breakers @ 480 V [2] | | Fuses @ 600 V [3] | |
|---|---|---|---|---|
| | Max. Breaker Size (A) | Max. SCCR (kA) | Max. Fuse Size (A) | Max. SCCR (kA) |
| LC1K06 | 20 | 65 | 25 | 100 |
| LC1K09 | 20 | 65 | 30 | 100 |
| LC1K12 | 20 | 65 | 30 | 100 |

[1] Ratings apply to circuits with voltages no greater than those listed.
[2] When protected by any circuit breaker, including thermal-magnetic and magnetic-only
[3] When protected by any Class J or CC time-delay fuse
**NOTE:** This table lists the maximum SCCR of the component when protected by any circuit breaker or fuse. If the maximum component SCCR is 65 kA and a 25 kA rated circuit breaker is used, then the system will be 25 kA as the circuit breaker becomes the weakest link.


© 2013 Schneider Electric All Rights Reserved

## TeSys™ D Contactors

### Table 14: TeSys D Contactors

| Catalog Number | Standard Motor Ratings @ 50/60 Hz (hp) | | | | | | Max. Inductive AC3 Current (A) | Max. Resistive AC1 Current (A) | Max. Component SCCR (kA) [1] | |
|---|---|---|---|---|---|---|---|---|---|---|
| | 1 Ø | | 3 Ø | | | | | | Circuit Breakers @ 480 V [2] | Fuses @ 600 V [3] |
| | 120 V | 240 V | 208 V | 240 V | 480 V | 600 V | | | | |
| LC1D09 | 0.5 | 1 | 2 | 2 | 5 | 7.5 | 9 | 20 | 85 | 100 |
| LC1D12 | 1 | 2 | 3 | 3 | 7.5 | 10 | 12 | 25 | 85 | 100 |
| LC1D18 | 1 | 3 | 5 | 5 | 10 | 15 | 18 | 32 | 85 | 100 |
| LC1D25 | 2 | 3 | 7.5 | 7.5 | 15 | 20 | 25 | 40 | 85 | 100 |
| LC1D32 | 2 | 5 | 10 | 10 | 20 | 30 | 32 | 50 | 85 | 100 |
| LC1D40A | 3 | 5 | 10 | 10 | 30 | 30 | 40 | 60 | 100 | 100 |
| LC1D50A | 3 | 7.5 | 15 | 15 | 40 | 40 | 50 | 80 | 100 | 100 |
| LC1D65A | 5 | 10 | 20 | 20 | 40 | 50 | 65 | 80 | 100 | 100 |
| LC1D80 | 7.5 | 15 | 25 | 30 | 60 | 60 | 80 | 125 | 100 | 100 |
| LC1D115 | — | — | 30 | 40 | 75 | 100 | 115 | 200 | 100 | 100 |
| LC1D150 | — | — | 40 | 50 | 100 | 125 | 150 | 200 | 100 | 100 |

[1] Ratings apply to circuits with voltages no greater than those listed.
[2] When protected by any circuit breaker, including thermal-magnetic and magnetic-only, meeting the size limits in Table 15.
[3] When protected by any Class J or CC time-delay fuse meeting the size limites in Table 15.
**NOTE:** This table lists the maximum SCCR of the component when protected by any circuit breaker or fuse. If the maximum component SCCR is 100 kA and a 25 kA rated circuit breaker is used, then the system will be 25 kA as the circuit breaker becomes the weakest link.




**TeSys D Contactor LC1D12**

### Table 15: TeSys D Contactor Maximum Component SCCR [1]

| Catalog Number | Circuit Breakers @ 480 V [2] | | Fuses @ 600 V [3] | |
|---|---|---|---|---|
| | Max. Breaker Size (A) | Max. SCCR (kA) | Max. Fuse Size (A) | Max. SCCR (kA) |
| LC1D09 | 35 | 85 | 25 | 100 |
| LC1D12 | 35 | 85 | 30 | 100 |
| LC1D18 | 60 | 85 | 40 | 100 |
| LC1D25 | 60 | 85 | 60 | 100 |
| LC1D32 | 60 | 85 | 80 | 100 |
| LC1D40A | 110 | 100 | 90 | 100 |
| LC1D50A | 110 | 100 | 110 | 100 |
| LC1D65A | 110 | 100 | 125 | 100 |
| LC1D80 | 150 | 100 | 175 | 100 |
| LC1D115 | 250 | 100 | 250 | 100 |
| LC1D150 | 250 | 100 | 300 | 100 |

[1] Ratings apply to circuits with voltages no greater than those listed.
[2] When protected by any circuit breaker, including thermal-magnetic and magnetic-only.
[3] When protected by any Class J or CC time-delay fuse (Class CC applicable up to 30A only).
**NOTE:** This table lists the maximum SCCR of the component when protected by any circuit breaker or fuse. If the maximum component SCCR is 100 kA and a 25 kA rated circuit breaker is used, then the system will be 25 kA as the circuit breaker becomes the weakest link.

© 2013 Schneider Electric All Rights Reserved

Additional TeSys™ D Contactor Ratings

**Table 16: UL/CSA Lighting Ratings @ 575 / 600V**

| Device | Ballast | Tungsten |
|---|---|---|
| LC1D09 (AC coil only) | 20 A | 20 A |
| LC1D12 (AC coil only) | 25 A | 20 A |
| LC1D18 (AC coil only) | 32 A | 25 A |
| LC1D25 (AC coil only) | 40 A | 40 A |
| LC1D32 (AC coil only) | 50 A | 50 A |
| LC1DT20 (AC coil only) | 20 A | 20 A |
| LC1DT25 (AC coil only) | 25 A | 25 A |
| LC1DT32 (AC coil only) | 32 A | 32 A |
| LC1DT40 (AC coil only) | 40 A | 40 A |
| LC1D40A | 60 A | 60 A |
| LC1D50A | 70 A | 70 A |
| LC1D65A | 80 A | 70 A |
| LC1D80, LC1D80004 | 100 A | 100 A[1] |
| LC1D115, LC1D1150004 | 115 A | 115 A[1] |
| LC1D150, LC1D1500004 | 150 A | 150 A[1] |

[1] 480 V max.

**Table 17: Elevator Duty Ratings (hp)**

| Catalog Number | 1 Ø | 3 Ø | | | |
|---|---|---|---|---|---|
| | 240 V | 208 V | 240 V | 480 V | 600 V |
| LC1D12 (AC) | 1.5 | 2 | 3 | 7.5 | 7.5 |
| LC1D25 (AC) | 3 | 5 | 7.5 | 15 | 20 |
| LC1D32 (AC) | 5 | 10 | — | — | — |
| LC1D40A (AC) | — | — | — | — | — |
| LC1D50A (AC) | 7.5 | 10 | 15 | 25 | 30 |
| LC1D65A (AC) | 10 | 15 | 20 | 25 | 30 |
| LC1D80 | 15 | 20 | 25 | 50 | 50 |
| LC1D115 | — | — | — | — | — |
| LC1D150 | 15 | 25 | 30 | 60 | 75 |


© 2013 Schneider Electric All Rights Reserved

Additional TeSys™ D Contactor Ratings
Continued

**Table 18: Definite Purpose Ratings, 3-Phase, Breaking All Lines**
Hermetic Refrigeration Compressor

| Device | FLA | LRA | | |
|---|---|---|---|---|
| | | 240V | 480V | 600V |
| LC1D09 (AC coil only) | 9 | 54 | 45 | 36 |
| LC1D12 (AC coil only) | 12 | 72 | 60 | 48 |
| LC1D18 (AC coil only) | 18 | 108 | 90 | 72 |
| LC1D25 (AC coil only) | 25 | 150 | 125 | 100 |
| LC1D32 (AC coil only) | 32 | 192 | 160 | 128 |
| LC1D40A | 40 | 240 | 200 | 160 |
| LC1D50A | 50 | 300 | 250 | 200 |
| LC1D65A | 65 | 390 | 325 | 260 |
| LC1D80 | 75 | 450 | 375 | 300 |
| LC1D115 | 115 | 690 | 575 | 460 |
| LC1D150 | 150 | 900 | 750 | 600 |

## TeSys F Contactors




**TeSys F Contactor**
**LC1F400**

**Table 19: TeSys F Contactors**

| Catalog Number | Standard Motor Ratings @ 50/60 Hz (hp) | | | | Max. Inductive AC3 Current (A) | Max. Resistive AC1 Current (A) |
|---|---|---|---|---|---|---|
| | 3 Ø | | | | | |
| | 208 V | 240 V | 480 V | 600 V | | |
| LC1F115 | 30 | 40 | 75 | 100 | 115 | 200 |
| LC1F150 | 40 | 50 | 100 | 125 | 150 | 250 |
| LC1F185 | 50 | 60 | 125 | 150 | 185 | 275 |
| LC1F225 | — | — | — | — | 225 | 315 |
| LC1F265 | 60 | 75 | 150 | 175 | 265 | 350 |
| LC1F330 | 75 | 100 | 200 | 250 | 330 | 400 |
| LC1F400 | 100 | 125 | 250 | 300 | 400 | 500 |
| LC1F500 | 150 | 200 | 400 | 500 | 500 | 700 |
| LC1F630 | 250 | 300 | 600 | 800 | 630 | 1000 |
| LC1F780 | — | — | — | — | 780 | 1600 |
| LC1F800 | — | 450 | 800 | 900 | 800 | 1000 |
| LC1F1400 | — | — | — | — | — | 1400 |
| LC1F1700 | — | — | — | — | — | 1700 |
| LC1F2100 | — | — | — | — | — | 2100 |

© 2013 Schneider Electric All Rights Reserved

Additional TeSys™ F Contactor Ratings

**Table 20: UL/CSA Lighting ratings @ 480 V**

| 3-Pole or 4-Pole Contactor | Tungsten Rating | Ballast Rating |
|---|---|---|
| LC1F115 | 115 A | 115 A |
| LC1F150 | 150 A | 150 A |
| LC1F185 | 200 A | 200 A |
| LC1F265 | 265 A | 265 A |
| LC1F330 | 300 A | 300 A |

**Table 21: Elevator Duty Ratings (hp)**

| Contactor | 1Ø | 3Ø | | | |
|---|---|---|---|---|---|
| | 240 V | 208 V | 240 V | 480 V | 600 V |
| LC1F185 | 20 | 25 | 30 | 75 | 75 |
| LC1F265 | — | 40 | 40 | — | — |
| LC1F330 | — | 50 | 50 | — | — |
| LC1F400 | — | 60 | 60 | — | — |
| LC1F500 | — | 75 | 75 | — | — |
| LC1F630 | — | 100 | 100 | — | — |

**Table 22: Definite Purpose Ratings, 3-Phase, Breaking All Lines**
Hermetic Refrigeration Compressor

| Contactor | FLA | LRA | | |
|---|---|---|---|---|
| | | 240 V | 480 V | 600 V |
| LC1F115 | 135 | 800 | 800 | 520 |
| LC1F150 | 150 | 900 | 750 | 700 |
| LC1F185 | 220 | 1500 | 1500 | 1200 |
| LC1F225 | 220 | 1500 | 1500 | 1200 |
| LC1F265 | 270 | 1800 | 1900 | 1500 |
| LC1F400 | 350 | 2000 | 2000 | 1800 |
| LC1F500 | 700 | 4500 | 4500 | 4200 |
| LC1F630 | 880 | 5000 | 5000 | 4850 |
| LC1F780 | 1330 | 7500 | 7500 | 7290 |


© 2013 Schneider Electric All Rights Reserved

## Type S Contactors

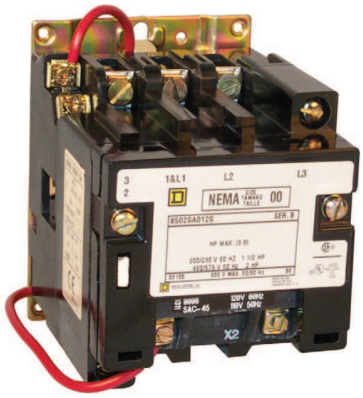

Type S Contactor
8502SAO12

**Table 23: Type S Contactors**

| Catalog Number | Standard Motor Ratings @ 50/60 Hz (hp) | | | | Max. Resistive AC1 Current (A) | NEMA Size | Max. Component SCCR (kA) [1] | |
|---|---|---|---|---|---|---|---|---|
| | 3 Ø | | | | | | Circuit Breakers @ 480 V [2] | Fuses @ 600 V |
| | 200 V | 230 V | 460 V | 575 V | | | | |
| 8502SAO12 | 1.5 | 1.5 | 2 | 2 | 9 | 00 | 100 | 100 [3] |
| 8502SBO2 | 3 | 3 | 5 | 5 | 18 | 0 | 100 | 100 [3] |
| 8502SCO2 | 7.5 | 7.5 | 10 | 10 | 27 | 1 | 100 | 100 [3] |
| 8502SDO2 | 10 | 15 | 25 | 25 | 45 | 2 | 100 | 100 [3] |
| 8502SEO2 | 25 | 30 | 50 | 50 | 90 | 3 | 100 | 100 [3] |
| 8502SFO2 | 40 | 50 | 100 | 100 | 135 | 4 | 100 | 100 [4] |
| 8502SGO2 | 75 | 100 | 200 | 200 | 270 | 5 | 100 | 100 [4] |
| 8502SHO2 | 150 | 200 | 400 | 400 | 540 | 6 | 65 | 100 [4] |
| 8502SJO2 | — | 300 | 600 | 600 | 810 | 7 | 30 | 30 |

[1] Ratings apply to circuits with voltages no greater than those listed.
[2] When protected by any circuit breaker, including thermal-magnetic and magnetic-only, meeting the size limits in Table 24.
[3] When protected by any Class RK5, RK1, T or J fuse, meeting the size limits in Table 24.
[4] When protected by any Class T or J fuse, meeting the size limits in Table 24.
**NOTE:** This table lists the maximum SCCR of the component when protected by any circuit breaker or fuse. If the maximum component SCCR is 100 kA and a 25 kA rated circuit breaker is used, then the system will be 25 kA as the circuit breaker becomes the weakest link.

**Table 24: Type S Contactor Maximum Component SCCR[1]**

| Catalog Number | Circuit Breakers @ 480 V [2] | | Fuses @ 600 V | |
|---|---|---|---|---|
| | Max. Breaker Size (A) | Max. SCCR (kA) | Max. Fuse Size (A) | Max. SCCR (kA) |
| 8502SAO12 | 70 | 100 | 60 [3] | 100 |
| 8502SBO2 | 70 | 100 | 60 [3] | 100 |
| 8502SCO2 | 70 | 100 | 60 [3] | 100 |
| 8502SDO2 | 100 | 100 | 100 [3] | 100 |
| 8502SEO2 | 150 | 100 | 200 [3] | 100 |
| 8502SFO2 | 225 | 100 | 200 [4] | 100 |
| 8502SGO2 | 400 | 100 | 400 [4] | 100 |
| 8502SHO2 | 800 | 65 | 600 [4] | 100 |
| 8502SJO2 | 2000 | 30 | 1500 | 30 |

[1] Ratings apply to circuits with voltages no greater than those listed.
[2] When protected by any circuit breaker, including thermal-magnetic and magnetic-only.
[3] When protected by any Class RK5, RK1, T or J fuse.
[4] When protected by any Class T or J fuse.
**NOTE:** This table lists the maximum SCCR of the component when protected by any circuit breaker or fuse. If the maximum component SCCR is 100 kA and a 25 kA rated circuit breaker is used, then the system will be 25 kA as the circuit breaker becomes the weakest link.

© 2013 Schneider Electric All Rights Reserved

Additional Type S Contactor Ratings

**Table 25: Type S Lighting Ratings @ 250 V Maximum**

| Catalog Number | Tungsten & Infrared (A) |
|---|---|
| 8502SAO12 | 5 |
| 8502SBO2 | 10 |
| 8502SCO2 | 15 |
| 8502SDO2 | 30 |
| 8502SEO2 | 60 |
| 8502SFO2 | 120 |
| 8502SGO2 | 240 |
| 8502SHO2 | 480 |
| 8502SJO2 | — |

## Definite Purpose Contactors



**Definite Purpose Type DP Compact Contactor 8910DP22V09**

**Table 26: Definite Purpose Type DP Compact Contactors**

| Catalog Number | Max. Inductive AC3 Current (A) | Locked Rotor Amperes | | | Max. Resistive AC1 Current (A) | Max. Component SCCR (kA) [1] | |
|---|---|---|---|---|---|---|---|
| | | 277 V | 460 V | 575 V | | Circuit Breakers @ 480 V [2] | Fuses @ 600 V [3] |
| **1-Pole Contactors** | | | | | | | |
| 8910DP11 | 20 | 120 | 100 | 80 | 25 | 100 | 100 |
| 8910DP21 | 25 | 150 | 125 | 100 | 30 | 100 | 100 |
| 8910DP31 | 30 | 150 | 125 | 100 | 40 | 100 | 100 |
| 8910DP41 | 40 | 240 | 200 | 160 | 50 [5] | 100 | 100 |
| **2-Pole Contactors [4]** | | | | | | | |
| 8910DP12 | 20 | 120 | 100 | 80 | 30 | 100 | 100 |
| 8910DP22 | 25 | 150 | 125 | 100 | 35 | 100 | 100 |
| 8910DP32 | 30 | 150 | 125 | 100 | 40 | 100 | 100 |
| 8910DP42 | 40 | 240 | 200 | 160 | 50 | 100 | 100 |

[1] Ratings apply to circuits with voltages no greater than those listed.
[2] When protected by any circuit breaker, including thermal-magnetic and magnetic-only, meeting the size limits in Table 27.
[3] When protected by any Class J time-delay fuse, meeting the size limits in Table 24.
[4] Above 240 V, all lines must be switched.
[5] 50 A Resistive, maximum 277 V. All others rated 40 A Resistive (above 277 V).
**NOTE:** This table lists the maximum SCCR of the component when protected by any circuit breaker or fuse. If the maximum component SCCR is 100 kA and a 25 kA rated circuit breaker is used, then the system will be 25 kA as the circuit breaker becomes the weakest link.

**Table 27: Definite Purpose Type DP Compact Contactor Maximum Component SCCR[1]**

| Catalog Number [2] | Circuit Breaker @ 480 V [3] | | Fuse @ 600 V [4] | |
|---|---|---|---|---|
| | Max. Breaker Size (A) | Max. SCCR (kA) | Max. Fuse Size (A) | Max. SCCR (kA) |
| 8910DP1* | 80 | 100 | 60 | 100 |
| 8910DP2* | 80 | 100 | 60 | 100 |
| 8910DP3* | 80 | 100 | 60 | 100 |
| 8910DP4* | 100 | 100 | 100 | 100 |

[1] Ratings apply to circuits with voltages no greater than those listed.
[2] The "*" represents the number of poles. Replace the "*" with a 2 for a 2-pole contactor or a 3 for a 3-pole contactor.
[3] When protected by any circuit breaker, including thermal-magnetic and magnetic-only.
[4] When protected by any Class J time-delay fuse.
**NOTE:** This table lists the maximum SCCR of the component when protected by any circuit breaker or fuse. If the maximum component SCCR is 100 kA and a 25 kA rated circuit breaker is used, then the system will be 25 kA as the circuit breaker becomes the weakest link.


© 2013 Schneider Electric All Rights Reserved

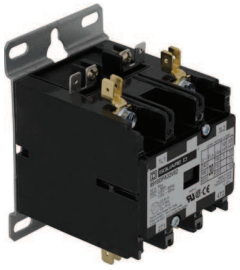

Definite Purpose
Type DPA Contactor
8910DPA32

**Table 28: Definite Purpose Type DPA Contactors [1]**

| Catalog Number | Max. Inductive AC3 Current (A) | Locked Rotor Amperes | | | Max. Resistive AC1 Current (A) | Horsepower Ratings | | | | | Poles | Max. Component SCCR (kA) [2] | |
|---|---|---|---|---|---|---|---|---|---|---|---|---|---|
| | | | | | | 1Ø | | 3Ø | | | | Circuit Breakers @ 480 V [3] | Fuses @ 600 V [4] |
| | | 230 V | 460 V | 575 V | | 115 V | 230 V | 230 V | 460 V | 575 V | | | |
| 8910DPA12 | 20 | 120 | 100 | 80 | 30 | 1.5 | 3 | 7.5 | 7.5 | 7.5 | 2 | 100 | 100 |
| 8910DPA13 | | | | | | | | | | | 3 | | |
| 8910DPA14 | | | | | | | | | | | 4 | | |
| 8910DPA22 | 25 | 150 | 125 | 100 | 35 | 2 | 5 | 10 | 15 | 20 | 2 | 100 | 100 |
| 8910DPA23 | | | | | | | | | | | 3 | | |
| 8910DPA24 | | | | | | | | | | | 4 | | |
| 8910DPA32 | 30 | 180 | 150 | 120 | 40 | 2 | 5 | 10 | 15 | 20 | 2 | 100 | 100 |
| 8910DPA33 | | | | | | | | | | | 3 | | |
| 8910DPA34 | | | | | | | | | | | 4 | | |
| 8910DPA42 | 40 | 240 | 200 | 160 | 50 | 3 | 7.5 | 10 | 20 | 25 | 2 | 100 | 100 |
| 8910DPA43 | | | | | | | | | | | 3 | | |
| 8910DPA44 | | | | | | | | | | | 4 | | |
| 8910DPA52 | 50 | 300 | 250 | 200 | 65 | 3 | 10 | 15 | 30 | 30 | 2 | 100 | 100 |
| 8910DPA53 | | | | | | | | | | | 3 | | |
| 8910DPA62 | 60 | 360 | 300 | 240 | 75 | 5 | 10 | 25 | 30 | 30 | 2 | 100 | 100 |
| 8910DPA63 | | | | | | | | | | | 3 | | |
| 8910DPA72 | 75 | 450 | 375 | 300 | 94 | 5 | 15 | 25 | 40 | 40 | 2 | 100 | 100 |
| 8910DPA73 | | | | | | | | | | | 3 | | |
| 8910DPA92 | 90 | 540 | 450 | 360 | 120 | 7.5 | 20 | 30 | 50 | 50 | 2 | 100 | 100 |
| 8910DPA93 | | | | | | | | | | | 3 | | |

[1] Above 240 V, all lines must be switched.
[2] Ratings apply to circuits with voltages no greater than those listed.
[3] When protected by any circuit breaker, including thermal-magnetic and magnetic-only, meeting the size limits in Table 29.
[4] When protected by any Class RK5 or J time-delay fuse, meeting the size limits in Table 29.
**NOTE:** This table lists the maximum SCCR of the component when protected by any circuit breaker or fuse. If the maximum component SCCR is 100 kA and a 25 kA rated circuit breaker is used, then the system will be 25 kA as the circuit breaker becomes the weakest link.

© 2013 Schneider Electric All Rights Reserved

**Table 29: Definite Purpose Type DPA Contactor Maximum Component SCCR[1]**

| Catalog Number [2] | Circuit Breaker @ 480 V [3] | | Fuse @ 600 V [4] | |
|---|---|---|---|---|
| | Max. Breaker Size (A) | Max. SCCR (kA) | Max. Fuse Size (A) | Max. SCCR (kA) |
| 8910DPA1* | 80 | 100 | 60 | 100 |
| 8910DPA2* | 80 | 100 | 60 | 100 |
| 8910DPA3* | 80 | 100 | 60 | 100 |
| 8910DPA4* | 100 | 100 | 100 | 100 |
| 8910DPA5* | 150 | 100 | 200 | 100 |
| 8910DPA6* | 150 | 100 | 200 | 100 |
| 8910DPA7* | 225 | 100 | 200 | 100 |
| 8910DPA9* | 225 | 100 | 200 | 100 |

[1] Ratings apply to circuits with voltages no greater than those listed.
[2] The "*" represents the number of poles. Replace the "*" with a 2 for a 2-pole contactor or a 3 for a 3-pole contactor or a 4 for a 4-pole contactor.
[3] When protected by any circuit breaker, including thermal-magnetic and magnetic-only.
[4] When protected by any Class RK5 or Class J time-delay fuse.
**NOTE:** This table lists the maximum SCCR of the component when protected by any circuit breaker or fuse. If the maximum component SCCR is 100 kA and a 25 kA rated circuit breaker is used, then the system will be 25 kA as the circuit breaker becomes the weakest link.

# UL 508 Overload Relays

## TeSys™ K Overload Relays




**TeSys K Overload Relay LR2K0304**

**Table 30: TeSys K Overload Relays**

| Current Setting Range (A) | Class 10 with Single Phase Sensitivity | Max. Component SCCR [1] | | | |
|---|---|---|---|---|---|
| | | Circuit Breakers @ 480 V [2] | | Fuses @ 600 V [3] | |
| | | Max. Breaker Size (A) | Max. SCCR (kA) | Max. Fuse Size (A) | Max. SCCR (kA) |
| 0.1–0.16 | LR2K0301 | 15 | 65 | 10 | 100 |
| 0.16–0.23 | LR2K0302 | 15 | 65 | 10 | 100 |
| 0.23–0.36 | LR2K0303 | 15 | 65 | 10 | 100 |
| 0.36–0.54 | LR2K0304 | 15 | 65 | 10 | 100 |
| 0.54–0.8 | LR2K0305 | 15 | 65 | 10 | 100 |
| 0.8–1.2 | LR2K0306 | 15 | 65 | 10 | 100 |
| 1.2–1.8 | LR2K0307 | 15 | 65 | 10 | 100 |
| 1.8–2.6 | LR2K0308 | 15 | 65 | 10 | 100 |
| 2.6–3.7 | LR2K0310 | 15 | 65 | 10 | 100 |
| 3.8–5.5 | LR2K0312 | 15 | 65 | 20 | 100 |
| 5.5–8 | LR2K0314 | 25 | 65 | 30 | 100 |
| 8–11.5 | LR2K0316 | 25 | 65 | 30 | 100 |

[1] Ratings apply to circuits with voltages no greater than those listed.
[2] When protected by any circuit breaker, including thermal-magnetic and magnetic-only.
[3] When protected by any Class J or CC time-delay fuse.
**NOTE:** This table lists the maximum SCCR of the component when protected by any circuit breaker or fuse. If the maximum component SCCR is 65 kA and a 25 kA rated circuit breaker is used, then the system will be 25 kA as the circuit breaker becomes the weakest link.


© 2013 Schneider Electric All Rights Reserved

## TeSys™ D Overload Relays




TeSys D Overload Relay

### Table 31: TeSys D Overload Relays

| Current Setting Range (A) | For Direct Mounting to LC1… | Class 10 with Single Phase Sensitivity | Class 10 without Single Phase Sensitivity | Class 20 with Single Phase Sensitivity | Class 20 without Single Phase Sensitivity | Max. Component SCCR [1] | | | |
|---|---|---|---|---|---|---|---|---|---|
| | | | | | | Circuit Breakers @ 480 V [2] | | Fuses @ 600 V [3] | |
| | | | | | | Max. Breaker Size (A) | Max. SCCR (kA) | Max. Fuse Size (A) | Max. SCCR (kA) |
| 0.10–0.16 | D09–D32 | LRD01 | LR3D01 | — | — | 15 | 65 | 10 | 100 |
| 0.16–0.25 | | LRD02 | LR3D02 | — | — | 15 | 65 | 10 | 100 |
| 0.25–0.40 | | LRD03 | LR3D03 | — | — | 15 | 65 | 10 | 100 |
| 0.40–0.63 | | LRD04 | LR3D04 | — | — | 15 | 65 | 10 | 100 |
| 0.63–1 | | LRD05 | LR3D05 | — | — | 15 | 65 | 10 | 100 |
| 1–1.6 | | LRD06 | LR3D06 | — | — | 15 | 65 | 10 | 100 |
| 1.6–2.5 | | LRD07 | LR3D07 | — | — | 15 | 65 | 10 | 100 |
| 2.5–4 | | LRD08 | LR3D08 | LRD1508 | LR3D1508A1 | 15 | 65 | 15 | 100 |
| 4–6 | | LRD10 | LR3D10 | LRD1510 | LR3D1510A1 | 15 | 65 | 20 | 100 |
| 5.5–8 | | LRD12 | LR3D12 | LRD1512 | LR3D1512A1 | 15 | 65 | 30 | 100 |
| 7–10 | | LRD14 | LR3D14 | LRD1514 | LR3D1514A1 | 20 | 65 | 40 | 100 |
| 9–13 | D12–D32 | LRD16 | LR3D16 | LRD1516 | LR3D1516A1 | 25 | 65 | 50 | 100 |
| 12–18 | D18–D32 | LRD21 | LR3D21 | LRD1521 | LR3D1521A1 | 35 | 65 | 60 | 100 |
| 16–24 | D25–D32 | LRD22 | LR3D22 | — | — | 45 | 65 | 60 | 100 |
| 17–25 | | — | — | LRD1522 | LR3D1522A1 | 45 | 65 | 100 | 100 |
| 23–32 | | LRD32 | LR3D32 | — | — | 60 | 65 | 80 | 100 |
| 23–28 | | — | — | LRD1530 | LR3D1530A1 | 60 | 65 | 100 | 100 |
| 25–32 | | — | — | LRD1532 | LR3D1532A1 | 60 | 65 | 100 | 100 |
| 30–38 | D32 | LRD35 | LR3D35 | — | — | 70 | 65 | 100 | 100 |
| 9–13 | D40A–D65A [4] | LRD313 | LR3D313 | LRD313L | — | 25 | 100 | 30 | 100 |
| 12–18 | | LRD318 | LR3D318 | LRD318L | — | 35 | 100 | 45 | 100 |
| 16–25 | | LRD325 | LR3D325 | LRD325L | — | 45 | 100 | 60 | 100 |
| 23–32 | | LRD332 | LR3D332 | LRD332L | — | 60 | 100 | 80 | 100 |
| 30–40 | | LRD340 | LR3D340 | LRD340L | — | 70 | 100 | 100 | 100 |
| 37–50 | | LRD350 | LR3D350 | LRD350L | — | 90 | 100 | 125 | 100 |
| 48–65 | D50A–D65A [4] | LRD365 | LR3D365 | LRD365L | — | 125 | 100 | 200 | 100 |
| 17–25 | D40–D80 [5] | LRD3322 | LR3D3322 | LR2D3522 | LR3D3522 | 45 | 100 | 60 | 100 |
| 23–32 | | LRD3353 | LR3D3353 | LR2D3553 | LR3D3553 | 60 | 100 | 80 | 100 |
| 30–40 | | LRD3355 | LR3D3355 | LR2D3555 | LR3D3555 | 70 | 100 | 90 | 100 |
| 37–50 | D50–D80 [5] | LRD3357 | LR3D3357 | LR2D3557 | LR3D3557 | 90 | 100 | 125 | 100 |
| 48–65 | | LRD3359 | LR3D3359 | LR2D3559 | LR3D3559 | 125 | 100 | 150 | 100 |
| 55–70 | D65–D80 [5] | LRD3361 | LR3D3361 | LR2D3561 | LR3D3561 | 125 | 100 | 175 | 100 |
| 63–80 | | LRD3363 | LR3D3363 | LR2D3563 | LR3D3563 | 150 | 100 | 200 | 100 |
| 80–104 | D80 | LRD3365 | — | — | — | 200 | 100 | 250 | 100 |
| 80–104 | D115–D150 | LRD4365 | — | — | — | 200 | 100 | 250 | 100 |
| 95–120 | | LRD4367 | — | — | — | 250 | 100 | 400 | 100 |

[1] Ratings apply to circuits with voltages no greater than those listed.
[2] When protected by any circuit breaker, including thermal-magnetic and magnetic-only.
[3] When protected by any Class J or CC time-delay fuse (Class CC applicable up to 30A only).
[4] Overload relays with Everlink termination - direct mount to D40A to D65A only.
[5] Direct mount to old D2 style D40 to D65 (no Everlink terminations) and to D80 only.
**NOTE:** This table lists the maximum SCCR of the component when protected by any circuit breaker or fuse. If the maximum component SCCR is 100 kA and a 25 kA rated circuit breaker is used, then the system will be 25 kA as the circuit breaker becomes the weakest link.

© 2013 Schneider Electric All Rights Reserved




**TeSys D Overload Relay**
**LR9D5369**

### Table 32: TeSys™ D Overload Relays — Solid State

| Current Setting Range (A) | For Direct Mounting to LC1… | Class 10 | Class 20 | Class 10 or 20 Selectable | Max. Component SCCR [1] | | | |
|---|---|---|---|---|---|---|---|---|
| | | | | | Circuit Breakers @ 480 V [2] | | Fuses @ 600 V [3] | |
| | | | | | Max. Breaker Size (A) | Max. SCCR (kA) | Max. Fuse Size (A) | Max. SCCR (kA) |
| 60–100 | D115–D150 | LR9D5367 | LR9D5567 | LR9D67 | 175 | 100 | 225 | 100 |
| 90–150 | D115–D150 | LR9D5369 | LR9D5569 | LR9D69 | 250 | 100 | 400 | 100 |

[1] Ratings apply to circuits with voltages no greater than those listed.
[2] When protected by any circuit breaker, including thermal-magnetic and magnetic-only.
[3] When protected by any Class J time-delay fuse.
**NOTE:** This table lists the maximum SCCR of the component when protected by any circuit breaker or fuse. If the maximum component SCCR is 100 kA and a 25 kA rated circuit breaker is used, then the system will be 25 kA as the circuit breaker becomes the weakest link.

## TeSys F Overload Relays




**TeSys F Overload Relay**
**LR9F5**

### Table 33: TeSys F Overload Relays [1]

| Current Setting Range (A) | For Direct Mounting to LC1… | Class 10 | Class 20 |
|---|---|---|---|
| 30–50 | F115–F185 | LR9F5357 | LR9F5557 |
| 48–80 | | LR9F5363 | LR9F5563 |
| 60–100 | | LR9F5367 | LR9F5567 |
| 90–150 | | LR9F5369 | LR9F5569 |
| 132–220 | F185–F265 [2] | LR9F5371 | LR9F5571 |
| 200–330 | F265–F500 | LR9F7375 | LR9F7575 |
| 300–500 | | LR9F7379 | LR9F7579 |
| 380–630 | F400–F630 | LR9F7381 | LR9F7581 |

[1] When mounting overload relays LR9F5*57 to LR9F5*71 directly beneath the contactor, supporting the relays with a mounting plate is recommended. With overload relays LR9F7*75 to LR9F7*81, use of a support mounting plate is mandatory.
[2] Interconnection kit LA7F407 is required to mount an LR9F*71 to an LC1F185.

## TeSys T Motor Management System

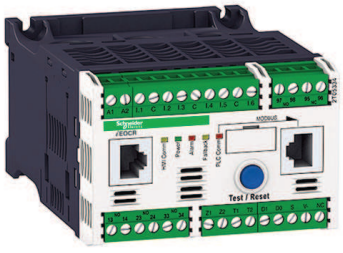


**TeSys T Motor Management System**
**LTMR08MFM**

### Table 34: TeSys T Motor Management System

| Current Range (A) | Catalog Number [1] | | Max. Component SCCR [2] | |
|---|---|---|---|---|
| | Control Voltage | | Circuit Breakers (kA) [3] | Fuses (kA) |
| | 24 Vdc | 100-240 Vac | | |
| 0.4–8 | LTMR08*BD | LTMR08*FM | 100 | 100 |
| 1.35–27 | LTMR27*BD | LTMR27*FM | 100 | 100 |
| 5–100 | LTMR100*BD | LTMR100*FM | 100 | 100 |

[1] The "*" represents the type of fieldbus. Replace the "*" with a M for Modbus, a P for Profibus DP, an E for Ethernet Modbus TCP, a C for CANopen and a D for DeviceNet.
[2] Ratings apply to circuits no greater than 600 V.
[3] When protected by any Class J or CC time-delay fuse (Class CC applicable up to 30 A only).
**NOTE:** This table lists the maximum SCCR of the component when protected by any circuit breaker or fuse. If the maximum component SCCR is 100 kA and a 25 kA rated circuit breaker is used, then the system will be 25 kA as the circuit breaker becomes the weakest link.


© 2013 Schneider Electric All Rights Reserved

# UL508 Starters

## Type S Starters

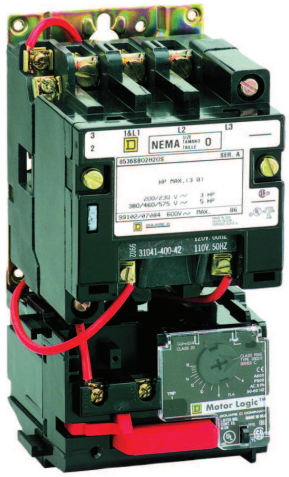

MotorStarter with Motorlogic
8536SBO2

**Table 35: Type S Starters [1]**

| Catalog Number | Standard Motor Ratings @ 50/60 Hz (hp) | | | | Continuous Current Rating (A) | NEMA Size |
|---|---|---|---|---|---|---|
| | 3 Ø | | | | | |
| | 200 V | 230 V | 460 V | 575 V | | |
| 8536SAO12 | 1.5 | 1.5 | 2 | 2 | 9 | 00 |
| 8536SBO2 | 3 | 3 | 5 | 5 | 18 | 0 |
| 8536SCO2 | 7.5 | 7.5 | 10 | 10 | 27 | 1 |
| 8536SDO1 | 10 | 15 | 25 | 25 | 45 | 2 |
| 8536SEO1 | 25 | 30 | 50 | 50 | 90 | 3 |
| 8536SFO1 | 40 | 50 | 100 | 100 | 135 | 4 |
| 8536SGO1 | 75 | 100 | 200 | 200 | 270 | 5 |
| 8536SHO2 | 150 | 200 | 400 | 400 | 540 | 6 |
| 8536SJO2 | — | 300 | 600 | 600 | 810 | 7 |

[1] Type S starters with TeSys T overload relays have the same component short-circuit current ratings as the Type S contactor, shown in Table 23.

## Definite Purpose Starters

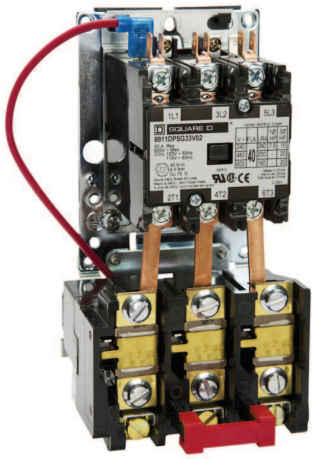

Definite Purpose Starter
8911DPSO33

**Table 36: Definite Purpose Starters**

| Catalog Number | Max. Inductive AC3 Current (A) | Horsepower Ratings | | | | | No. of Thermal Units |
|---|---|---|---|---|---|---|---|
| | | 1Ø | | 3Ø | | | |
| | | 115 V | 230 V | 230 V | 460 V | 575 V | |
| **2-Pole Single Phase** | | | | | | | |
| 8911DPSO12 | 20 | 1.5 | 3 | — | — | — | 1 |
| 8911DPSO22 | 25 | 2 | 5 | — | — | — | |
| 8911DPSO32 | 30 | 2 | 5 | — | — | — | |
| 8911DPSO42 | 40 | 3 | 7.5 | — | — | — | |
| 8911DPSO52 | 50 | 3 | 10 | — | — | — | |
| **3-Pole Poly-Phase** | | | | | | | |
| 8911DPSO13 | 20 | 1.5 | 3 | 7.5 | 7.5 | 7.5 | 3 |
| 8911DPSO23 | 25 | 2 | 5 | 10 | 15 | 20 | |
| 8911DPSO33 | 30 | 2 | 5 | 10 | 15 | 20 | |
| 8911DPSO43 | 40 | 3 | 7.5 | 10 | 20 | 25 | |
| 8911DPSO53 | 50 | 3 | 10 | 15 | 30 | 30 | |

© 2013 Schneider Electric All Rights Reserved

# UL 508 Self-Protected Combination Motor Controller

## TeSys™ U

**Meeting UL508 Type E**
**UL File E164871**



TeSys U
LUB12

**Table 37: TeSys U Horsepower and SCCR Ratings**
In combination with line spacer LU9SP0 (stand-alone starters) or GV1G09 and GV2G busbars (multiple starters)

| Standard Motor Ratings @ 50/60 Hz (hp) | | | | | | Self-Protected Combination Starter | Overload Trip Range (A) | SCCR (kA) | | |
|---|---|---|---|---|---|---|---|---|---|---|
| 1Ø | | 3Ø | | | | | | | | |
| 120 V | 240 V | 200 V | 240 V | 480 V | 600 V | | | 480Y / 277 V | 480 V with LUALB1 Limiter | 600 V with LUALB1 Limiter |
| 1.5 | 2 | 3 | 3 | 7.5 | 10 | LUB12 | 0.15–12 | 65 | 130 | 65 |
| 2 | 5 | 10 | 10 | 20 | 25 | LUB32 | 0.15–32 | 65 | 130 | 65 |

**NOTE:** Type E ratings only valid at 480Y and lower without using limiter block LUALB1. When limiter block LUALB1 is used, SCCR applies for stand alone starter or with GV1G09 and GV2G busbar for multiple starters.

# UL 508 Manual Self-Protected Combination Motor Controller

## TeSys GV2P

**Meeting UL 508 Type E**
**UL File E164871**



GV2P10

**Table 38: TeSys GV2P Horsepower and SCCR Ratings**
In combination with line spacer GV2GH7 (stand-alone starters) or GV1G09 and GV2G busbars (multiple starters)

| Manual Self-Protected Starter | Overload Trip Range (A) | Maximum Horsepower Ratings | | | | | | SCCR (kA) 480Y/277V |
|---|---|---|---|---|---|---|---|---|
| | | 1Ø | | 3Ø | | | | |
| | | 120 V | 240 V | 208 V | 240 V | 480 V | 600 V | |
| GV2P01 | 0.10–0.16 | — | — | — | — | — | — | 100 |
| GV2P02 | 0.16–0.25 | — | — | — | — | — | — | 100 |
| GV2P03 | 0.25–0.40 | — | — | — | — | — | — | 100 |
| GV2P04 | 0.40–0.63 | — | — | — | — | — | — | 100 |
| GV2P05 | 0.63–1 | — | — | — | — | — | 0.5 | 100 |
| GV2P06 | 1–1.6 | — | 1/10 | — | — | 0.75 | 0.75 | 100 |
| GV2P07 | 1.6–2.5 | — | 1/6 | 0.5 | 0.5 | 1 | 1.5 | 100 |
| GV2P08 | 2.5–4 | 1/8 | 1/3 | 0.75 | 0.75 | 2 | 3 | 100 |
| GV2P10 | 4–6.3 | 0.25 | 0.5 | 1 | 1.5 | 3 | 5 | 100 |
| GV2P14 | 6–10 | 0.5 | 1.5 | 2 | 3 | 5 | 7.5 | 100 |
| GV2P16 | 9–14 | 0.75 | 2 | 3 | 3 | 10 | 10 | 10 |
| GV2P20 | 13–18 | 1 | 3 | 5 | 5 | 10 | 15 | 10 |
| GV2P21 | 17–23 | 1.5 | 3 | 5 | 7.5 | 15 | 20 | 10 |
| GV2P22 | 20–25 | 2 | — | 7.5 | 7.5 | 15 | 20 | 10 |

**NOTE:** Type E ratings are only valid at 480Y voltages and lower.

## TeSys GV3P



GV3P25

**Table 39: TeSys GV3P Horsepower and SCCR Ratings**
In combination with line spacer GV3G66 and GVAM11 (magnetic trip unit) for stand-alone starters

| Manual Self-Protected Starter | Overload Trip Range (A) | Maximum Horsepower Ratings | | | | | | SCCR (kA) | |
|---|---|---|---|---|---|---|---|---|---|
| | | 1Ø | | 3Ø | | | | 480Y / 277 V | 600Y / 347 V |
| | | 120V | 240 V | 208 V | 240 V | 480 V | 600 V | | |
| GV3P13 | 9–13 | 0.5 | 1.5 | 3 | 3 | 7.5 | 10 | 100 | 25 |
| GV3P18 | 12–18 | 0.75 | 2 | 5 | 5 | 10 | 15 | 100 | 25 |
| GV3P25 | 17–25 | 1.5 | 3 | 5 | 7.5 | 15 | 20 | 100 | 25 |
| GV3P32 | 23–32 | 2 | 5 | 7.5 | 10 | 20 | 25 | 100 | 25 |
| GV3P40 | 30–40 | 3 | — | 10 | — | 25 | 30 | 65 | 25 |
| GV3P50 | 37–50 | — | 7.5 | 10 | 15 | 30 | 40 | 65 | 25 |
| GV3P65 | 48–65 | 5 | 10 | 15 | 20 | 40 | 50 | 65 | 25 |

Type E ratings are only valid at 600Y and 480Y voltages and lower.


© 2013 Schneider Electric All Rights Reserved

# Combination Starter Solutions

## UL508 Type A

Construction Type A utilizes four separate devices to achieve the four functions required for protection. The disconnecting means is achieved via a UL98 manual disconnect switch. The motor branch circuit protection is achieved using UL248 fuses. The motor controller and motor overload relay used are UL508 contactors and UL508 overload relays. Schneider Electric has various products that meet this construction type, as listed below.

**Table 40: Disconnecting Means using UL248 Fuses, a UL508 Contactor, and UL508 Overload Relays**

| UL98 Manual Disconnect | UL248 Fuses | UL508 Contactor | UL508 Overload Relay |
|---|---|---|---|
| TeSys™ GS Disconnects | TeSys DF Fuse Holder | TeSys K contactor | TeSys K overload relay |
| Class 9422 Disconnects | Type FB Fuse Holder | TeSys D contactor | TeSys D overload relay |
| | | TeSys F contactor | TeSys F overload relay |
| | | Type S contactor | TeSys T motor management system |
| | | Definite Purpose contactor | |

A UL508 starter is a combination of a UL508 contactor and a UL508 overload relay. As such, the use of UL508 starters also meets construction Type A.

**Table 41: Disconnecting Means using UL248 Fuses and a UL508 Starter**

| UL98 Manual Disconnect | UL248 Fuses | UL508 Starter |
|---|---|---|
| TeSys GS Disconnects | TeSys DF Fuse Holder | Type S starter |
| Class 9422 Disconnects | Type FB Fuse Holder | Definite Purpose starter |

## UL508 Type B

Construction Type B utilizes an UL 508 motor short circuit protector, which is no longer commercially available.

## UL508 Type C

Construction Type C utilizes three separate devices to achieve the four functions required for protection. The disconnecting means and motor branch circuit protection are achieved using a UL489 inverse time circuit breaker. The motor controller and motor overload relay used are UL508 contactors and UL508 overload relays. Schneider Electric has various products that meet this construction type, as listed below.

**Table 42: Disconnecting Means and Motor Branch Circuit protection using a UL98 Inverse Time Circuit Breaker, UL508 Contactor, and a UL508 Overload Relay**

| UL98 Inverse Time Circuit Breaker | UL508 Contactor | UL508 Overload Relay |
|---|---|---|
| PowerPact circuit breaker | TeSys K contactor | TeSys K overload relay |
| | TeSys D contactor | TeSys D overload relay |
| | TeSys F contactor | TeSys F overload relay |
| | Type S contactor | TeSys T motor management system |
| | Definite Purpose contactor | |

As previously mentioned, a UL508 starter is a combination of a UL508 contactor and a UL508 overload relay. Therefore, the use of UL508 starters also meets construction Type C.

© 2013 Schneider Electric All Rights Reserved

**Table 43: Disconnecting Means and Motor Branch Circuit protection using a UL489 Inverse Time Circuit Breaker and a UL508 Starter**

| UL489 Inverse Time Circuit Breaker | UL508 Starter |
|---|---|
| PowerPact circuit breaker | Type S starter |
| | Definite Purpose starter |

## UL508 Type D

Construction Type D is very similar to Type C, except that the disconnecting means and motor branch circuit protection are achieved using a UL489 instantaneous trip circuit breaker rather than an inverse time circuit breaker. Schneider Electric has various products that meet this construction type, as listed below.

**Table 44: Disconnecting Means and Motor Branch Circuit protection using a UL489 Inverse Time Circuit Breaker, UL508 Contactor, and a UL508 Overload Relay**

| UL489 Inverse Time Circuit Breaker | UL508 Contactor | UL508 Overload Relay |
|---|---|---|
| PowerPact circuit breaker | TeSys™ K contactor | TeSys K overload relay |
| | TeSys D contactor | TeSys D overload relay |
| | TeSys F contactor | TeSys F overload relay |
| | Type S contactor | TeSys T motor management system |
| | Definite Purpose contactor | |

Just as for Type C, the use of UL508 starters also meets construction Type D.

**Table 45: Disconnecting Means and Motor Branch Circuit protection using a UL489 Inverse Time Circuit Breaker and a UL508 Starter**

| UL489 Inverse Time Circuit Breaker | UL508 Starter |
|---|---|
| PowerPact circuit breaker | Type S starter |
| | Definite Purpose starter |


© 2013 Schneider Electric All Rights Reserved

## UL508 Type E

Construction Type E is a unique situation in that all four functions are achieved using a single device. For this reason, Type E is known as a self-protected combination motor controller. Schneider Electric has two product families that meet this unique construction type, TeSys U and TeSys GV. TeSys U is a self-protected combination motor controller while TeSys GV is a manual self-protected combination motor controller.

**Table 46: UL508 Self-protected Combination Motor Controller**

| UL508 Self-Protected Combination Controller |
|---|
| TeSys U |

**Table 47: UL508 Manual Self-protected Combination Motor Controller**

| UL508 Manual Self-Protected Combination Controller |
|---|
| TeSys GV2P and GV3P |

## UL508 Type F

Construction Type F is similar to Type E, but uses two devices. The disconnecting means, motor branch circuit protection, and motor overload relay functions are all combined into one device, a UL508 manual self-protected combination controller while the motor controller is kept separate in the form of a UL508 contactor. Schneider Electric offers the following solution for this construction type:

**Table 48: Self-protected Combination Motor Controller using a UL508 Manual Self-protected Combination Controller and a UL508 Contactor**

| UL508 Manual Self-Protected Combination Controller | UL508 Contactor |
|---|---|
| TeSys GV2P and GV3P | TeSys D contactor |

© 2013 Schneider Electric All Rights Reserved

## TeSys™ GV2P + TeSys D Contactors




GV2P10

### Manual Self-Protected Combination Starter Meeting UL508 Type F
### UL File E164871

**Table 49: TeSys GV2P Horsepower and SCCR Ratings**
In combination with line spacer GV2GH7 (stand-alone starters) or GV1G09 and GV2G busbars (multiple starters)

| Manual Self-Protected Starter | Overload Trip Range (A) | Maximum Horsepower Ratings | | | | | | Type of Contactor Required | SCCR (kA) 480Y / 277 V |
|---|---|---|---|---|---|---|---|---|---|
| | | 1Ø | | 3Ø | | | | | |
| | | 120 V | 240 V | 208 V | 240 V | 480 V | 600 V | | |
| GV2P01 | 0.10–0.16 | — | — | — | — | — | — | LC1D09 or D12 | 100 |
| GV2P02 | 0.16–0.25 | — | — | — | — | — | — | LC1D09 or D12 | 100 |
| GV2P03 | 0.25–0.40 | — | — | — | — | — | — | LC1D09 or D12 | 100 |
| GV2P04 | 0.40–0.63 | — | — | — | — | — | — | LC1D09 or D12 | 100 |
| GV2P05 | 0.63– 1 | — | — | — | — | — | 0.5 | LC1D09 or D12 | 100 |
| GV2P06 | 1–1.6 | — | 1/10 | — | — | 0.75 | 0.75 | LC1D09 or D12 | 100 |
| GV2P07 | 1.6–2.5 | — | 1/6 | 0.5 | 0.5 | 1 | 1.5 | LC1D09 or D12 | 100 |
| GV2P08 | 2.5– 4 | 1/8 | 1/3 | 0.75 | 0.75 | 2 | 3 | LC1D09 or D12 | 100 |
| GV2P10 | 4–6.3 | 0.25 | 0.5 | 1 | 1.5 | 3 | 5 | LC1D09 or D12 | 100 |
| GV2P14 | 6–10 | 0.5 | 1.5 | 2 | 3 | 5 | 7.5 | LC1D09 or D12 | 100 |
| GV2P16 | 9–14 | 0.75 | 2 | 3 | 3 | 10 | 10 | LC1D12 or D18 | 42 |
| GV2P20 | 13–18 | 1 | 3 | 5 | 5 | 10 | 15 | LC1D12 or D18 | 42 |
| GV2P21 | 17–23 | 1.5 | 3 | 5 | 7.5 | 15 | 20 | LC1D25 or D32 | 42 |
| GV2P22 | 20–25 | 2 | — | 7.5 | 7.5 | 15 | 20 | LC1D25 or D32 | 42 |

Type F ratings only valid at 480Y and lower.

## TeSys GV3P + TeSys D Contactors



GV3P40 with LC1D40A

**Table 50: TeSys GV3P Horsepower and SCCR Ratings**
In combination with line spacer GV3G66 and GVAM11 (magnetic trip unit) for stand-alone starters

| Manual Self-Protected Starter | Overload Trip Range (A) | Maximum Horsepower Ratings | | | | | | Type of Contactor Required | SCCR (kA) | |
|---|---|---|---|---|---|---|---|---|---|---|
| | | 1Ø | | 3Ø | | | | | 480Y/ 277V | 600Y/ 347V |
| | | 120 V | 240 V | 208 V | 240 V | 480 V | 600 V | | | |
| GV3P13 | 9–13 | 0.5 | 1.5 | 3 | 3 | 7.5 | 10 | LC1D18 | 65 | 25 |
| GV3P18 | 12–18 | 0.75 | 2 | 5 | 5 | 10 | 15 | LC1D18 | 65 | 25 |
| GV3P25 | 17–25 | 1.5 | 3 | 5 | 7.5 | 15 | 20 | LC1D25 | 65 | 25 |
| GV3P32 | 23–32 | 2 | 5 | 7.5 | 10 | 20 | 25 | LC1D32 | 65 | 25 |
| GV3P40 | 30–40 | 3 | — | 10 | — | 25 | 30 | LC1D40A, 50A, 65A | 65 | 25 |
| GV3P50 | 37–50 | — | 7.5 | 10 | 15 | 30 | 40 | LC1D50A or 65A | 65 | 25 |
| GV3P65 | 48–65 | 5 | 10 | 15 | 20 | 40 | 50 | LC1D65A or 80 | 65 | 25 |

Type F ratings only valid at 600Y and 480Y voltages and lower.


© 2013 Schneider Electric All Rights Reserved

# Group Motor Installations

## UL508 Group Motor Installations

### TeSys™ GV2ME




GV2ME07

**GV2ME: UL File E164864**

**Table 51: TeSys GV2ME Horsepower and SCCR Ratings**
In association with LC1D contactors, suitable for Group Installation when protected by fuses or a circuit breaker (including multi starter with GV1G09 or GV2G05 blocks plus GV2G busbars)

| Manual Motor Starter | Overload Trip Range (A) | Maximum Horsepower Ratings | | | | | | SCCR (kA) [1] | | | | | |
|---|---|---|---|---|---|---|---|---|---|---|---|---|---|
| | | 1Ø | | 3Ø | | | | Type of Contactor Required | 480 V | 600Y / 347 V | 480 V with GV1L3 Limiter | Contactor for 600 V with LA9LB920 | 600 V with LA9LB920 |
| | | 120 V | 240 V | 208 V | 240 V | 480 V | 600 V | | | | | | |
| GV2ME01 | 0.10–0.16 | — | — | — | — | — | — | LC1D09 or D12 | 65 | 42 | 65 | LC1D09 or D12 | 42 |
| GV2ME02 | 0.16–0.25 | — | — | — | — | — | — | LC1D09 or D12 | 65 | 42 | 65 | LC1D09 or D12 | 42 |
| GV2ME03 | 0.25–0.40 | — | — | — | — | — | — | LC1D09 or D12 | 65 | 42 | 65 | LC1D09 or D12 | 42 |
| GV2ME04 | 0.40–0.63 | — | — | — | — | — | — | LC1D09 or D12 | 65 | 42 | 65 | LC1D09 or D12 | 42 |
| GV2ME05 | 0.63–1 | — | — | — | — | — | 0.5 | LC1D09 or D12 | 65 | 42 | 65 | LC1D09 or D12 | 42 |
| GV2ME06 | 1–1.6 | — | 1/10 | — | — | 0.75 | 0.75 | LC1D09 or D12 | 65 | 42 | 65 | LC1D09 or D12 | 42 |
| GV2ME07 | 1.6–2.5 | — | 1/6 | 0.5 | 0.5 | 1 | 1.5 | LC1D09 or D12 | 65 | 42 | 65 | LC1D09 or D12 | 42 |
| GV2ME08 | 2.5–4 | 1/8 | 1/3 | 0.75 | 0.75 | 2 | 3 | LC1D09 or D12 | 65 | 42 | 65 | LC1D09 or D12 | 42 |
| GV2ME10 | 4–6.3 | 0.25 | 0.5 | 1 | 1.5 | 3 | 5 | LC1D09 or D12 | 65 | 42 | 65 | LC1D09 or D12 | 42 |
| GV2ME14 | 6–10 | 0.5 | 1.5 | 2 | 3 | 5 | 7.5 | LC1D09 or D12 | 65 | 42 | 65 | LC1D09 or D12 | 42 |
| GV2ME16 | 9–14 | 0.75 | 2 | 3 | 3 | 10 | 10 | LC1D12 or D18 | 22 | 10 | 65 | LC1D32 or D38 | 42 |
| GV2ME20 | 13–18 | 1 | 3 | 5 | 5 | 10 | 15 | LC1D12 or D18 | 22 | 10 | 65 | LC1D32 or D38 | 42 |
| GV2ME21 | 17–23 | 1.5 | 3 | 5 | 7.5 | 15 | 20 | LC1D25 or D32 | 10 | 10 | 65 | LC1D32 or D38 | 42 |
| GV2ME22 | 20–25 | 2 | — | 7.5 | 7.5 | 15 | 20 | LC1D25 or D32 | 10 | 10 | 65 | LC1D32 or D38 | 42 |
| GV2ME32 | 24–32 | 2 | 5 | 7.5 | 10 | 20 | 25 | LC1D25 or D32 | 5 | 5 | 65 | LC1D32 or D38 | 42 |

[1] Ratings apply to circuit with voltages no greater than those listed.

© 2013 Schneider Electric All Rights Reserved

## TeSys™ GV2P



GV2P10

**Table 52: TeSys GV2P Horsepower and SCCR Ratings**
In association with LC1D contactors, suitable for Group Installation when protected by fuses or a circuit breaker (including multi starter with GV1G09 or GV2G05 blocks plus GV2G busbars)

| Manual Motor Starter | Overload Trip Range (A) | Maximum Horsepower Ratings | | | | | | SCCR (kA) [1] | | | | | |
|---|---|---|---|---|---|---|---|---|---|---|---|---|---|
| | | 1Ø | | 3Ø | | | | Type of Contactor Required | 480 V | 600Y / 347 V | 480 V with GV1L3 | Contactor for 600 V with LA9LB920 | 600 V with LA9LB920 |
| | | 120 V | 240 V | 208 V | 240 V | 480 V | 600 V | | | | | | |
| GV2P01 | 0.10–0.16 | — | — | — | — | — | — | LC1D09 or D12 | 65 | 42 | 65 | LC1D09 or D12 | 42 |
| GV2P02 | 0.16–0.25 | — | — | — | — | — | — | LC1D09 or D12 | 65 | 42 | 65 | LC1D09 or D12 | 42 |
| GV2P03 | 0.25–0.40 | — | — | — | — | — | — | LC1D09 or D12 | 65 | 42 | 65 | LC1D09 or D12 | 42 |
| GV2P04 | 0.40–0.63 | — | — | — | — | — | — | LC1D09 or D12 | 65 | 42 | 65 | LC1D09 or D12 | 42 |
| GV2P05 | 0.63–1 | — | — | — | — | — | 0.5 | LC1D09 or D12 | 65 | 42 | 65 | LC1D09 or D12 | 42 |
| GV2P06 | 1–1.6 | — | 1/10 | — | — | 0.75 | 0.75 | LC1D09 or D12 | 65 | 42 | 65 | LC1D09 or D12 | 42 |
| GV2P07 | 1.6–2.5 | — | 1/6 | 0.5 | 0.5 | 1 | 1.5 | LC1D09 or D12 | 65 | 42 | 65 | LC1D09 or D12 | 42 |
| GV2P08 | 2.5–4 | 1/8 | 1/3 | 0.75 | 0.75 | 2 | 3 | LC1D09 or D12 | 65 | 42 | 65 | LC1D09 or D12 | 42 |
| GV2P10 | 4–6.3 | 0.25 | 0.5 | 1 | 1.5 | 3 | 5 | LC1D09 or D12 | 65 | 42 | 65 | LC1D09 or D12 | 42 |
| GV2P14 | 6–10 | 0.5 | 1.5 | 2 | 3 | 5 | 7.5 | LC1D09 or D12 | 65 | 42 | 65 | LC1D09 or D12 | 42 |
| GV2P16 | 9–14 | 0.75 | 2 | 3 | 3 | 10 | 10 | LC1D12 or D18 | 22 | 10 | 65 | LC1D32 or D38 | 42 |
| GV2P20 | 13–18 | 1 | 3 | 5 | 5 | 10 | 15 | LC1D12 or D18 | 22 | 10 | 65 | LC1D32 or D38 | 42 |
| GV2P21 | 17–23 | 1.5 | 3 | 5 | 7.5 | 15 | 20 | LC1D25 or D32 | 10 | 10 | 65 | LC1D32 or D38 | 42 |
| GV2P22 | 20–25 | 2 | — | 7.5 | 7.5 | 15 | 20 | LC1D25 or D32 | 10 | 10 | 65 | LC1D32 or D38 | 42 |
| GV2P32 | 24–32 | 2 | 5 | 7.5 | 10 | 20 | 25 | LC1D25 or D32 | 5 | 5 | 65 | LC1D32 or D38 | 42 |

[1] Ratings apply to circuit with voltages no greater than those listed.

## TeSys GV3P



GV3P25

**Table 53: TeSys GV3P Horsepower and SCCR Ratings**
In association with LC1D contactors, suitable for Group Installation, when protected by fuses or a circuit breaker

| Manual Motor Starter | Overload Trip Range (A) | Maximum Horsepower Ratings | | | | | | Type of Contactor Required | SCCR (kA) | |
|---|---|---|---|---|---|---|---|---|---|---|
| | | 1Ø | | 3Ø | | | | | 480Y / 277 V | 600Y / 347 V |
| | | 120 V | 240 V | 208 V | 240 V | 480 V | 600 V | | | |
| GV3P13 | 9–13 | 0.5 | 1.5 | 3 | 3 | 7.5 | 10 | LC1D18 | 65 | 25 |
| GV3P18 | 12–18 | 0.75 | 2 | 5 | 5 | 10 | 15 | LC1D18 | 65 | 25 |
| GV3P25 | 17–25 | 1.5 | 3 | 5 | 7.5 | 15 | 20 | LC1D25 | 65 | 25 |
| GV3P32 | 23–32 | 2 | 5 | 7.5 | 10 | 20 | 25 | LC1D32 | 65 | 25 |
| GV3P40 | 30–40 | 3 | — | 10 | — | 25 | 30 | LC1D40A, 50A or 65A | 65 | 25 |
| GV3P50 | 37–50 | — | 7.5 | 10 | 15 | 30 | 40 | LC1D50A or 65A | 65 | 25 |
| GV3P65 | 48–65 | 5 | 10 | 15 | 20 | 40 | 50 | LC1D65A or 80 | 65 | 25 |

These values are derived from the UL508 Type F certification (E164871).


© 2013 Schneider Electric All Rights Reserved

# Short Circuit Protection for Drives

Drives are not rated for group motor applications.

When a variable-speed drive is connected to a single-motor circuit, the branch-circuit protection provided must be of the type and size specified in the manufacturer's instructions that come with the drive. When the instructions do not specify the type and size, a branch-circuit fuse or inverse-time circuit breaker must be used and must be sized based on the input current rating of the drive multiplied by the percentage from UL508A Table 31.1.

Schneider Electric tested drives in combination with the following:

- Fuses
- UL489 circuit breakers
- GV2P and GV3P UL508 Type E self-protected, manual combination starters

The Combinations in the Table below have been tested per UL508C (Reference UL file E116875).

## Altivar™ 12 AC Drives

**Table 54: The Combinations in the Table Below Have Been Tested per UL508C (Reference UL file E116875)**

| ATV12 Drive | | | | | Short Circuit Current Ratings [1] | | | | | | | | | |
|---|---|---|---|---|---|---|---|---|---|---|---|---|---|---|
| | | | | | With QO Circuit Breaker | | | | | With GV2P/3P | | With Fuses | | |
| Input Voltage +10%/-15% 60 Hz Y | kW | hp | Input withstand Rating (kA) [6] | Reference | QO | QOB | QOU | A | SCCR (kA) [7] X | GV2P/3P Type E [2, 3] | SCCR (kA) | Fuses (A) [5] Z1, Z2 | SCCR (kA) | Line Reactor [4] |
| 120 V, 1-phase | 0.18 | 0.25 | 1 | ATV12H018F1 | yes | yes | yes | 10 | 1 | GV2P10 | 1 | Ferraz HSJ (15) | 1 | — |
| | 0.37 | 0.5 | 1 | ATV12•037F1 | yes | yes | yes | 20 | 1 | GV2P14 | 1 | Ferraz HSJ (25) | 1 | — |
| | 0.75 | 1 | 1 | ATV12H075F1 | yes | yes | yes | 25 | 1 | GV2P20 | 1 | Ferraz HSJ (40) | 1 | — |
| 240 V, 1-phase | 0.18 | 0.25 | 1 | ATV12H018M2 | yes | yes | yes | 10 | 1 | GV2P08 | 1 | Fast Acting Class CC Ferraz ASTDR(7) | 1 | — |
| | 0.37 | 0.5 | 1 | ATV12•037M2 | yes | yes | yes | 10 | 1 | GV2P10 | 1 | Ferraz HSJ (15) | 1 | — |
| | 0.55 | 0.75 | 1 | ATV12•055M2 | yes | yes | yes | 15 | 1 | GV2P14 | 1 | Ferraz HSJ (25) | 1 | — |
| | 0.75 | 1 | 1 | ATV12•075M2 | yes | yes | yes | 20 | 1 | GV2P14 | 1 | Ferraz HSJ (25) | 1 | — |
| | 1.5 | 2 | 1 | ATV12HU15M2 | no | no | yes | 25 | 1 | GV2P20 | 1 | Ferraz HSJ (40) | 1 | — |
| | 2.2 | 3 | 1 | ATV12HU22M2 | no | no | yes | 35 | 1 | GV2P22 | 1 | Ferraz HSJ (45) | 1 | — |
| 240 V, 3-phase | 0.18 | 0.25 | 5 | ATV12H018M3 | yes | yes | yes | 10 | 5 | GV2P07 | 5 | Fast Acting Class CC Ferraz ATDR(7) | 5 | — |
| | 0.37 | 0.5 | 5 | ATV12•037M3 | yes | yes | yes | 10 | 5 | GV2P08 | 5 | Fast Acting Class CC Ferraz ATDR(7) | 5 | — |
| | 0.75 | 1 | 5 | ATV12•075M3 | yes | yes | yes | 15 | 5 | GV2P14 | 5 | Ferraz HSJ (15) | 5 | — |
| | 1.5 | 2 | 5 | ATV12•U15M3 | yes | yes | yes | 15 | 5 | GV2P16 | 5 | Ferraz HSJ (25) | 5 | — |
| | 2.2 | 3 | 5 | ATV12•U22M3 | yes | yes | yes | 25 | 5 | GV2P20 | 5 | Ferraz HSJ (25) | 5 | — |
| | 3 | 3 | 5 | ATV12•U30M3 | no | no | yes | 30 | 5 | GV2P21 | 5 | Ferraz HSJ (40) | 5 | — |
| | 4 | 5 | 5 | ATV12•U40M3 | no | no | yes | 40 | 5 | GV2P22 | | Ferraz HSJ (45) | 5 | — |
| 240 V, 3-phase | 0.18 | 0.25 | 5 | ATV2H018M3 | yes | yes | yes | 10 | 10 | GV2P07 | 50 | 3 | 65 | 3% |
| | 0.37 | 0.5 | 5 | ATV12•037M3 | yes | yes | yes | 10 | 10 | GV2P08 | 50 | 8 | 65 | 3% |
| | 0.75 | 1 | 5 | ATV12•075M3 | yes | yes | yes | 15 | 10 | GV2P14 | 50 | 15 | 65 | 3% |
| | 1.5 | 2 | 5 | ATV12•U15M3 | yes | yes | yes | 15 | 10 | GV2P13 | 50 | 25 | 65 | 3% |
| | 2.2 | 3 | 5 | ATV12•U22M3 | yes | yes | yes | 25 | 10 | GV2P18 | 50 | 30 | 65 | 3% |
| | 3 | 3 | 5 | ATV12•U30M3 | no | no | yes | 30 | 10 | GV2P25 | 50 | 40 | 65 | 3% |
| | 4 | 5 | 5 | ATV12•U40M3 | no | no | yes | 40 | 10 | GV2P32 | 50 | 50 | 65 | 3% |

[1] Types of enclosures that can be used: 1, 12, 3, 3R, 4, and 4X-all non-ventilated.
[2] The GV2P•• self-protected manual combination starter must be used with the GV2GH7 insulating barrier to meet the UL 508 Type E rating.
[3] The GV3P•• self-protected manual combination starter must be used with the GV3G66 insulating barrier and the GVAM11 auxiliary contact block to meet the UL 508 Type E rating.
[4] The line reactor is required when the ATV12 drive is used in a system with a current availability higher than the drive's SCCR design.
[5] When fuse type is not specified any Class J or CC can be used. If fuse manufacturer is not specified any fuse manufacturer can be used.
[6] Input withstand rating is that for which the product has been designed thermally. Installation on a supply greater than this level will require additional inductance to satisfy this level.
[7] Output interrupt rating relies on integral solid state short circuit protection. This does not provide branch circuit protection. Branch circuit protection must be provided in accordance with the National Electrical Code and any additional local codes. This is dependant on the type of installation.
Suitable for use on a circuit capable of delivering not more than ___x___rms symmetrical kiloAmperes___Y___Volts maximum, when protected by___Z1___with a maximum rating of ___Z2___.

© 2013 Schneider Electric All Rights Reserved

Wiring

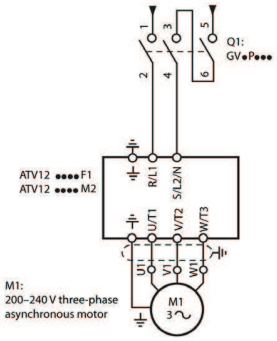


With Single-Phase Power Supply, when using GV2P and GV3P manual self-protected combination starters for single-phase input applications, wire the starter as illustrated.

## Altivar™ 32 AC Drives



ATV32 with TeSys GV2P

Components for use together in accordance with standard UL508C (UL file E116875, CSA file 224330).

**Table 55: The Combinations in the Table Below Have Been Tested per UL508C (Reference UL file E116875)**

| ATV32 Drive | | | | | | | Containment Short Circuit Current Ratings [2] | | | | | |
|---|---|---|---|---|---|---|---|---|---|---|---|---|
| | | | | | | | With Circuit Breaker | | With GV*P | | With Fuses | |
| Input Voltage 60 Hz | hp | Reference | Input AIC Rating (kA) [1] | Minimum Inductance (mH) | Line Reactor Reference | Output Interrupt Rating (kA) | PowerPact [3] | SCCR (kA) | GV2P/3P Type E [4] | SCCR (kA) | Fuses 600 V Class J [6] (A) | SCCR (kA) |
| 208-230V, 1-phase | 1/4 | ATV32H018M2 | 1 | 2.5 | RL00402 | 100 | H*L36015 | 65 | GV2P08 | 65 | 7 | 100 |
| | 1/2 | ATV32H037M2 | 1 | 2.5 | RL00802 | 100 | H*L36015 | 65 | GV2P10 | 65 | 15 | 100 |
| | 3/4 | ATV32H055M2 | 1 | 2.5 | RL00802 | 100 | H*L36015 | 65 | GV2P14 | 65 | 25 | 100 |
| | 1 | ATV32H075M2 | 1 | 2.5 | RL01202 | 100 | H*L36015 | 65 | GV3P13 [5] | 65 | 25 | 100 |
| | 1 1/2 | ATV32HU11M2 | 1 | 0.8 | RL01201 | 100 | H*L36020 | 65 | GV3P18 [5] | 65 | 25 | 100 |
| | 2 | ATV32HU15M2 | 1 | 0.8 | RL01201 | 100 | H*L36030 | 65 | GV3P25 [5] | 65 | 40 | 100 |
| | 3 | ATV32HU22M2 | 1 | 0.8 | RL01801 | 100 | H*L36035 | 65 | GV3P25 [5] | 65 | 45 | 100 |
| 480V, 3 phase | 1/2 | ATV32H037N4 | 5 | 12 | RL00201 | 100 | H*L36015 | 65 | GV2P07 | 65 | 6 | 100 |
| | 3/4 | ATV32H055N4 | 5 | 12 | RL00201 | 100 | H*L36015 | 65 | GV2P07 | 65 | 6 | 100 |
| | 1 | ATV32H075N4 | 5 | 12 | RL00201 | 100 | H*L36015 | 65 | GV2P08 | 65 | 6 | 100 |
| | 1 1/2 | ATV32HU11N4 | 5 | 6.5 | RL00402 | 100 | H*L36015 | 65 | GV2P08 | 65 | 12 | 100 |
| | 2 | ATV32HU15N4 | 5 | 6.5 | RL00402 | 100 | H*L36015 | 65 | GV2P10 | 65 | 12 | 100 |
| | 3 | ATV32HU22N4 | 5 | 5 | RL00803 | 100 | H*L36015 | 65 | GV2P14 | 65 | 15 | 100 |
| | 4 | ATV32HU30N4 | 5 | 3 | RL00802 | 100 | H*L36015 | 65 | GV2P14 | 65 | 17.5 | 100 |
| | 5 | ATV32HU40N4 | 5 | 3 | RL00802 | 100 | H*L36015 | 65 | GV3P13 [5] | 65 | 25 | 100 |
| | 7 1/2 | ATV32HU55N4 | 22 | 2.5 | RL01202 | 100 | H*L36020 | 65 | GV3P18 | 65 | 40 | 100 |
| | 10 | ATV32HU75N4 | 22 | 1.5 | RL01802 | 100 | H*L36030 | 65 | GV3P25 | 65 | 40 | 100 |
| | 15 | ATV32HD11N4 | 22 | 1.2 | RL02502 | 100 | H*L36040 | 65 | GV3P32 | 65 | 60 | 100 |
| | 20 | ATV32HD15N4 | 22 | 0.8 | RL03502 | 100 | H*L36050 | 65 | GV3P40 | 65 | 70 | 100 |

[1] This column shows the maximum input available interrupt current (AIC) rating the Altivar 32 drive can be installed on without adding impedance to the drive. Electrical distribution systems with a higher AIC capability will cause higher input currents in the front end of the drive. Install at least the minimum inductance shown when using an Altivar 32 drive on a system with a higher AIC value shown in this column. Without any additional impedance the column with the Input AIC ratings are the Short Circuit Current Ratings (SCCR) with the listed circuit breakers, GV*P products, and fuses.

[2] The Altivar 32 drive has a 100kA interrupt rating on the output of the drive. In addition to providing a rating based on shorting the output of the drive, these short circuit current ratings have been obtained by shorting components internal to the Altivar 32. These ratings allow proper coordination of short circuit protection. The amp rating of the short circuit protection devices in the table are maximum values. Smaller ampere sizes may be used. Integral solid state short circuit protection in the drive does not provide branch circuit protection. Branch circuit protection must be provided in accordance with the National Electrical Code and any local codes. Ratings apply to an Altivar 32 drive mounted in a non-ventilated Type 1, 3R, 4(X) or 12 rated enclosure. Minimum enclosure volume is 3.375 times the drive volume. The listed line reactor minimum inductance is required to get these higher ratings.

[3] Circuit Breaker part number designations: * = short circuit current rating. For 208 / 230 V range, use: * = D for 25kA, G for 65kA, J for 65kA, L for 65kA. For 480 V range, use: * = D for 18kA, G for 35kA, J for 65kA, L for 65kA.

[4] 480 V ratings are for Wye connected electrical distribution systems. GV2Ppp self protected manual combination starter must be used with GV2GH7 insulating barrier to meet UL 508 Type E rating. GV3Ppp self protected manual combination starter must be used with GV3G66 + GVAM11 insulating barrier to meet UL 508 Type E rating.

[5] The following GV2P products can be used in place of the GV3P products for obtaining the ratings listed in the Input AIC ratings column: GV2P16 for GV3P13, GV2P20 for GV3P18, GV2P22 for GV3P25.

[6] Fuse type can be fast acting or time delay Class J, or Class CC.


© 2013 Schneider Electric All Rights Reserved

## Altivar™ 212

Components for use together in accordance with standard UL508C (UL file E116875, CSA file 224330).



ATV212 Drive
ATV212HU55M3X

**Table 56: ATV212 Combination Ratings**

| ATV212 AC Drive | | | | Containment Short Circuit Current Rating [1] | | | | | | |
|---|---|---|---|---|---|---|---|---|---|---|
| Input Voltage 60 Hz | hp | Reference | Output Interrupt Rating (kAIC) | With Circuit Breaker | | | With GV*P | | With Fuses | |
| | | | | PowerPact | SCCR (kA) [2] | SCCR (kA) [3] | GV2P/3P Type E [4] | SCCR (kA) [2, 3] | Fuses (A) 600 V [5] | SCCR (kA) [2, 3] |
| 208V, 3 phase | 1 | ATV212H075M3X | 100 | HDL36015 | 22 | 22 | GV2P10 | 22 | 10 | 100 |
| | 2 | ATV212HU15M3X | 100 | HDL36015 | 22 | 22 | GV2P14 | 22 | 15 | 100 |
| | 3 | ATV212HU22M3X | 100 | HDL36020 | 22 | 22 | GV2P16 | 22 | 30 | 100 |
| | 4 | ATV212HU30M3X | 100 | HDL36030 | 22 | 22 | GV2P20 | 22 | 35 | 100 |
| | 5 | ATV212HU40M3X | 100 | HDL36040 | 22 | 22 | GV2P20 | 22 | 35 | 100 |
| | 7.5 | ATV212HU55M3X | 100 | HDL36050 | 22 | 22 | GV2P22 | 22 | 50 | 100 |
| | 10 | ATV212HU75M3X | 100 | HDL36070 | 22 | 22 | GV2P32 | 22 | 60 | 100 |
| | 15 | ATV212HD11M3X | 100 | HDL36100 | 22 | 22 | GV3P50 | 22 | 100 | 100 |
| | 20 | ATV212HD15M3X | 100 | HDL36125 | 22 | 22 | GV3P65 | 22 | 125 | 100 |
| | 25 | ATV212HD18M3X | 100 | JDL36175 | 22 | 22 | — | — | 150 | 100 |
| | 30 | ATV212HD22M3X | 100 | JDL36200 | 22 | 22 | — | — | 175 | 100 |
| | 40 | ATV212HD30M3X | 100 | JDL36250 | 22 | 22 | — | — | 200 | 100 |
| 230V, 3 phase | 1 | ATV212H075M3X | 100 | HDL36015 | 22 | 22 | GV2P10 | 22 | 10 | 100 |
| | 2 | ATV212HU15M3X | 100 | HDL36015 | 22 | 22 | GV2P10 | 22 | 15 | 100 |
| | 3 | ATV212HU22M3X | 100 | HDL36020 | 22 | 22 | GV2P14 | 22 | 30 | 100 |
| | 4 | ATV212HU30M3X | 100 | HDL36030 | 22 | 22 | GV2P20 | 22 | 35 | 100 |
| | 5 | ATV212HU40M3X | 100 | HDL36035 | 22 | 22 | GV2P20 | 22 | 35 | 100 |
| | 7.5 | ATV212HU55M3X | 100 | HDL36045 | 22 | 22 | GV2P21 | 22 | 45 | 100 |
| | 10 | ATV212HU75M3X | 100 | HDL36060 | 22 | 22 | GV2P32 | 22 | 60 | 100 |
| | 15 | ATV212HD11M3X | 100 | HDL36090 | 22 | 22 | GV3P40 | 22 | 90 | 100 |
| | 20 | ATV212HD15M3X | 100 | HDL36125 | 22 | 22 | GV3P50 | 22 | 110 | 100 |
| | 25 | ATV212HD18M3X | 100 | HDL36150 | 22 | 22 | — | — | 150 | 100 |
| | 30 | ATV212HD22M3X | 100 | JDL36175 | 22 | 22 | — | — | 175 | 100 |
| | 40 | ATV212HD30M3X | 100 | JDL36225 | 22 | 22 | — | — | 200 | 100 |

© 2013 Schneider Electric All Rights Reserved

**Table 56: ATV212 Combination Ratings** *(continued)*

| ATV212 AC Drive | | | | Containment Short Circuit Current Rating [1] | | | | | | |
|---|---|---|---|---|---|---|---|---|---|---|
| Input Voltage 60 Hz | hp | Reference | Output Interrupt Rating (kAIC) | With Circuit Breaker | | | With GV*P | | With Fuses | |
| | | | | PowerPact | SCCR (kA) [2] | SCCR (kA) [3] | GV2P/3P Type E [4] | SCCR (kA) [2, 3] | Fuses (A) 600 V [5] | SCCR (kA) [2, 3] |
| 480V, 3 phase | 1 | ATV212H075N4 | 100 | HDL36015 | — | 22 | GV2P07 | 22 | 5 | 100 |
| | 2 | ATV212HU15N4 | 100 | HDL36015 | — | 22 | GV2P08 | 22 | 7.5 | 100 |
| | 3 | ATV212HU22N4 | 100 | HDL36015 | — | 22 | GV2P10 | 22 | 10 | 100 |
| | 4 | ATV212HU30N4 | 100 | HDL36020 | — | 22 | GV2P14 | 22 | 15 | 100 |
| | 5 | ATV212HU40N4 | 100 | HDL36020 | — | 22 | GV2P14 | 22 | 15 | 100 |
| | 7.5 | ATV212HU55N4 | 100 | HDL36025 | — | 22 | GV2P16 | 22 | 20 | 100 |
| | 10 | ATV212HU75N4 | 100 | HDL36030 | — | 22 | GV2P20 | 22 | 30 | 100 |
| | 15 | ATV212HD11N4 | 100 | HDL36045 | — | 22 | GV2P21 | 22 | 45 | 100 |
| | 20 | ATV212HD15N4 | 100 | HDL36060 | 10 | 22 | GV2P22 | 22 | 60 | 100 |
| | 25 | ATV212HD18N4 | 100 | HDL36070 | 10 | 22 | GV2P32 | 22 | 80 | 100 |
| | 30 | ATV212HD22N4S | 100 | HDL36090 | 10 | 22 | GV3P40 | 22 | 90 | 100 |
| | 30 | ATV212HD22N4 | 100 | HDL36090 | — | 22 | — | — | 90 | 100 |
| | 40 | ATV212HD30N4 | 100 | HDL36125 | — | 22 | — | — | 110 | 100 |
| | 50 | ATV212HD37N4 | 100 | HDL36125 | 10 | 10 | — | — | 125 | 100 |
| | 60 | ATV212HD45N4 | 100 | HDL36150 | 10 | 10 | — | — | 150 | 100 |
| | 75 | ATV212HD55N4 | 100 | JDL36175 | 10 | 10 | — | — | 200 | 100 |
| | 100 | ATV212HD75N4 | 100 | JDL36225 | 10 | 10 | — | — | 250 | 100 |

[1] The Altivar™ 212 has a 100k SCC rating on the output of the drive as many other drives are rated. In addition to providing a rating based on shorting the output of the drive, these short circuit rating have been obtained by testing the weakest point internal to the ATV212 per UL508C. These ratings allow proper coordination of short circuit protection. The amp rating of the short circuit protection devices in the table are maximum values. Smaller amp sizes may be used.
[2] Ratings also apply to ATV212 Type 1 product, ie: an ATV212 fitted with a conduit box.
[3] Ratings apply to an ATV212 mounted in a non-ventilated Type 1, 3R, 4(X) or 12 rated enclosure. Minimum enclosure volume is 3.375 times the drive volume.
[4] 480 V ratings are for Wye connected electrical distribution systems. GV2P** self protected manual combination starter must be used with GV2GH7 insulating barrier to meet UL 508 Type E rating.
[5] Fuse type can be Class J, fast acting or time delay, or Class CC.


© 2013 Schneider Electric All Rights Reserved

## Altivar™ 312 AC Drives

Components for use together in accordance with standard UL508C.



ATV312

### Table 57: ATV312 Combination Ratings

| ATV312 Drive | | | | | | | | Short Circuit Current Ratings | | | | | |
|---|---|---|---|---|---|---|---|---|---|---|---|---|---|
| Input Voltage +10%/-15% 60 Hz | | hp | Reference | Input AIC Rating (kA) | Minimun Inductance (mH) | Line Reactor Reference | Output Interrupt rating: (kA) [1] | With Circuit Breaker | | With GV*P | | With Fuses | |
| | | | | | | | | PowerPact | SCCR (kA) [3] | GV2P/3P Type E [3, 4] | SCCR (kA) | Fuse (A) [5] | SCCR (kA) [2, 3] |
| Three-phase with or without line reactor | | | | | | | | | | | | | |
| 208/230V Three-phase | Without line reactor | 0.25 | ATV312H018M3 | 5 | — | — | 100 | HxL36015 | 22 | — | — | 3 | 22 |
| | | 0.5 | ATV312H037M3 | 5 | — | — | 100 | HxL36015 | 22 | — | — | 6 | 22 |
| | | 0.75 | ATV312H055M3 | 5 | — | — | 100 | HxL36015 | 22 | — | — | 10 | 22 |
| | | 1 | ATV312H075M3 | 5 | — | — | 100 | HxL36015 | 22 | — | — | 10 | 22 |
| | | 1.5 | ATV312HU11M3 | 5 | — | — | 100 | HxL36015 | 22 | — | — | 15 | 22 |
| | | 2 | ATV312HU15M3 | 5 | — | — | 100 | HxL36015 | 22 | — | — | 15 | 22 |
| | | 3 | ATV312HU22M3 | 5 | — | — | 100 | HxL36020 | 22 | — | — | 20 | 22 |
| | | — | ATV312HU30M3 | 5 | — | — | 100 | HxL36020 | 22 | — | — | 25 | 22 |
| | | 5 | ATV312HU40M3 | 5 | — | — | 100 | HxL36030 | 22 | — | — | 35 | 22 |
| | | 7.5 | ATV312HU55M3 | 22 | — | — | 100 | HxL36040 | 22 | — | — | 50 | 22 |
| | | 10 | ATV312HU75M3 | 22 | — | — | 100 | HxL36060 | 22 | — | — | 60 | 22 |
| | | 15 | ATV312HD11M3 | 22 | — | — | 100 | HxL36070 | 22 | — | — | 80 | 22 |
| | | 20 | ATV312HD15M3 | 22 | — | — | 100 | HxL36090 | 22 | — | — | 110 | 22 |
| | With line reactor | 0.25 | ATV312H018M3 | 5 | 3 | RL-00401 | 100 | HxL36015 | 65 | GV2P07 | 65 | 3 | 22 |
| | | 0.5 | ATV312H037M3 | 5 | 3 | RL-00401 | 100 | HxL36015 | 65 | GV2P08 | 65 | 6 | 22 |
| | | 0.75 | ATV312H055M3 | 5 | 3 | RL-00401 | 100 | HxL36015 | 65 | GV2P10 | 65 | 10 | 22 |
| | | 1 | ATV312H075M3 | 5 | 3 | RL-00401 | 100 | HxL36015 | 65 | GV2P10 | 65 | 10 | 22 |
| | | 1.5 | ATV312HU11M3 | 5 | 1.5 | RL-00801 | 100 | HxL36015 | 65 | GV2P14 | 65 | 15 | 22 |
| | | 2 | ATV312HU15M3 | 5 | 1.5 | RL-00801 | 100 | HxL36015 | 65 | GV2P14 | 65 | 15 | 22 |
| | | 3 | ATV312HU22M3 | 5 | 1.25 | RL-01201 | 100 | HxL36020 | 65 | GV3P13 or GV3P18 | 65 | 20 | 22 |
| | | — | ATV312HU30M3 | 5 | 1.25 | RL-01801 | 100 | HxL36020 | 65 | GV3P18 | 65 | 25 | 22 |
| | | 5 | ATV312HU40M3 | 5 | 1.25 | RL-01801 | 100 | HxL36030 | 65 | GV3P25 | 65 | 35 | 22 |
| | | 7.5 | ATV312HU55M3 | 22 | 0.5 | RL-02501 | 100 | HxL36040 | 65 | GV3P32 or GV3P40 | 65 | 50 | 22 |
| | | 10 | ATV312HU75M3 | 22 | 0.4 | RL-03501 | 100 | HxL36060 | 65 | GV3P50 | 65 | 60 | 22 |
| | | 15 | ATV312HD11M3 | 22 | 0.3 | RL-04501 | 100 | HxL36070 | 65 | GV3P65 | 65 | 80 | 22 |
| | | 20 | ATV312HD15M3 | 22 | 0.2 | RL-08001 | 100 | HxL36090 | 65 | — | — | 110 | 22 |

© 2013 Schneider Electric All Rights Reserved

**Table 57: ATV312 Combination Ratings** *(continued)*

| ATV312 Drive | | | | | | | | Short Circuit Current Ratings | | | | | |
|---|---|---|---|---|---|---|---|---|---|---|---|---|---|
| Input Voltage +10%/-15% 60 Hz | | hp | Reference | Input AIC Rating (kA) | Minimun Inductance (mH) | Line Reactor Reference | Output Interrupt rating: (kA) [1] | With Circuit Breaker | | With GV*P | | With Fuses | |
| | | | | | | | | PowerPact | SCCR (kA) [3] | GV2P/3P Type E [3, 4] | SCCR (kA) | Fuse (A) [5] | SCCR (kA) [2, 3] |
| Three-phase with or without line reactor | | | | | | | | | | | | | |
| 400/480 V Three-phase | Without line reactor | 0.5 | ATV312H037N4 | 5 | — | — | 100 | HxL36015 | 22 | — | — | 3 | 22 |
| | | 0.75 | ATV312H055N4 | 5 | — | — | 100 | HxL36015 | 22 | — | — | 6 | 22 |
| | | 1 | ATV312H075N4 | 5 | — | — | 100 | HxL36015 | 22 | — | — | 6 | 22 |
| | | 1.5 | ATV312HU11N4 | 5 | — | — | 100 | HxL36015 | 22 | — | — | 10 | 22 |
| | | 2 | ATV312HU15N4 | 5 | — | — | 100 | HxL36015 | 22 | — | — | 10 | 22 |
| | | 3 | ATV312HU22N4 | 5 | — | — | 100 | HxL36015 | 22 | — | — | 15 | 22 |
| | | — | ATV312HU30N4 | 5 | — | — | 100 | HxL36015 | 22 | — | — | 15 | 22 |
| | | 5 | ATV312HU40N4 | 5 | — | — | 100 | HxL36015 | 22 | — | — | 20 | 22 |
| | | 7.5 | ATV312HU55N4 | 22 | — | — | 100 | HxL36020 | 22 | — | — | 30 | 22 |
| | | 10 | ATV312HU75N4 | 22 | — | — | 100 | HxL36030 | 22 | — | — | 35 | 22 |
| | | 15 | ATV312HD11N4 | 22 | — | — | 100 | HxL36035 | 22 | — | — | 50 | 22 |
| | | 20 | ATV312HD15N4 | 22 | — | — | 100 | HxL36050 | 22 | — | — | 70 | 22 |
| | With line reactor | 0.5 | ATV312H037N4 | 5 | 12 | RL00201 | 100 | HxL36015 | 65 | GV2P07 | 65 | 3 | 100 |
| | | 0.75 | ATV312H055N4 | 5 | 12 | RL00201 | 100 | HxL36015 | 65 | GV2P07 | 65 | 6 | 100 |
| | | 1 | ATV312H075N4 | 5 | 12 | RL00201 | 100 | HxL36015 | 65 | GV2P08 | 65 | 6 | 100 |
| | | 1.5 | ATV312HU11N4 | 5 | 6.5 | RL00402 | 100 | HxL36015 | 65 | GV2P08 | 65 | 10 | 100 |
| | | 2 | ATV312HU15N4 | 5 | 6.5 | RL00402 | 100 | HxL36015 | 65 | GV2P10 | 65 | 10 | 100 |
| | | 3 | ATV312HU22N4 | 5 | 5 | RL00803 | 100 | HxL36015 | 65 | GV2P14 | 65 | 15 | 100 |
| | | — | ATV312HU30N4 | 5 | 3 | RL00802 | 100 | HxL36015 | 65 | GV2P14 | 65 | 15 | 100 |
| | | 5 | ATV312HU40N4 | 5 | 3 | RL00802 | 100 | HxL36015 | 65 | GV3P13 | 65 | 20 | 100 |
| | | 7.5 | ATV312HU55N4 | 22 | 2.5 | RL01202 | 100 | HxL36020 | 65 | GV3P18 | 65 | 30 | 100 |
| | | 10 | ATV312HU75N4 | 22 | 1.5 | RL01802 | 100 | HxL36030 | 65 | GV3P25 | 65 | 35 | 100 |
| | | 15 | ATV312HD11N4 | 22 | 1.2 | RL02502 | 100 | HxL36035 | 65 | GV3P32 | 65 | 50 | 100 |
| | | 20 | ATV312HD15N4 | 22 | 0.8 | RL03502 | 100 | HxL36050 | 65 | GV3P40 | 65 | 70 | 100 |
| 575/600 V Three-phase | With line reactor | 1 | ATV312H075S6 | 5 | 20 | RL-00202 | 100 | FAL36015 | 22 | — | — | 6 | 22 |
| | | 2 | ATV312HU15S6 | 5 | 9 | RL-00403 | 100 | FAL36015 | 22 | — | — | 6 | 22 |
| | | 3 | ATV312HU22S6 | 5 | 6.5 | RL-00402 | 100 | FAL36015 | 22 | — | — | 10 | 22 |
| | | 5 | ATV312HU40S6 | 5 | 5 | RL-00803 | 100 | FAL36025 | 22 | — | — | 15 | 22 |
| | | 7.5 | ATV312HU55S6 | 22 | 2.5 | RL-01202 | 100 | FAL36040 | 22 | — | — | 20 | 22 |
| | | 10 | ATV312HU75S6 | 22 | 2.5 | RL-01202 | 100 | FAL36050 | 22 | — | — | 25 | 22 |
| | | 15 | ATV312HD11S6 | 22 | 1.5 | RL-01802 | 100 | FAL36070 | 22 | — | — | 35 | 22 |
| | | 20 | ATV312HD15S6 | 22 | 1.2 | RL-02502 | 100 | FAL36080 | 22 | — | — | 45 | 22 |


© 2013 Schneider Electric All Rights Reserved

**Table 57: ATV312 Combination Ratings** *(continued)*

| ATV312 Drive | | | | | | | | Short Circuit Current Ratings | | | | | |
|---|---|---|---|---|---|---|---|---|---|---|---|---|---|
| Input Voltage +10%/-15% 60 Hz | | hp | Reference | Input AIC Rating (kA) | Minimun Inductance (mH) | Line Reactor Reference | Output Interrupt rating: (kA) [1] | With Circuit Breaker | | With GV*P | | With Fuses | |
| | | | | | | | | PowerPact | SCCR (kA) [3] | GV2P/3P Type E [3, 4] | SCCR (kA) | Fuse (A) [5] | SCCR (kA) [2, 3] |
| **Single-phase with or without line reactor** | | | | | | | | | | | | | |
| 208/230 V Single-phase | Without line reactor | 0.25 | ATV312H018M2 | 1 | — | — | 100 | — | — | — | — | 6 | 22 |
| | | 0.5 | ATV312H037M2 | 1 | — | — | 100 | — | — | — | — | 10 | 22 |
| | | 0.75 | ATV312H055M2 | 1 | — | — | 100 | — | — | — | — | 10 | 22 |
| | | 1 | ATV312H075M2 | 1 | — | — | 100 | — | — | — | — | 15 | 22 |
| | | 1.5 | ATV312HU11M2 | 1 | — | — | 100 | — | — | — | — | 20 | 22 |
| | | 2 | ATV312HU15M2 | 1 | — | — | 100 | — | — | — | — | 20 | 22 |
| | | 3 | ATV312HU22M2 | 1 | — | — | 100 | — | — | — | — | 30 | 22 |
| | | 5 | ATV312HU75M3 | 2 | — | — | 100 | HxL36060 | 22 | — | — | 60 | 22 |
| | | 7.5 | ATV312HD11M3 | 2 | — | — | 100 | HxL36070 | 22 | — | — | 80 | 22 |
| | | 10 | ATV312HD15M3 | 2 | — | — | 100 | HxL36090 | 22 | — | — | 110 | 22 |
| | With line reactor | 5 | ATV312HU75M3 | 22 | 0.75 | RL-03502 | 100 | HxL36060 | 65 | GV3P50 | 65 | 60 | 22 |
| | | 7.5 | ATV312HD11M3 | 22 | 0.375 | RL-05502 | 100 | HxL36070 | 65 | GV3P65 | 65 | 80 | 22 |
| | | 10 | ATV312HD15M3 | 22 | 0.278 | RL-08002 | 100 | HxL36090 | 65 | — | — | 110 | 22 |
| 400/480 V Single-phase | Without line reactor | 0.5 | ATV312H075N4 | 5 | — | — | 100 | HxL36015 | 22 | — | — | 6 | 22 |
| | | 0.75 | ATV312HU11N4 | 5 | — | — | 100 | HxL36015 | 22 | — | — | 10 | 22 |
| | | 1 | ATV312HU15N4 | 5 | — | — | 100 | HxL36015 | 22 | — | — | 10 | 22 |
| | | 1.5 | ATV312HU22N4 | 5 | — | — | 100 | HxL36015 | 22 | — | — | 15 | 22 |
| | | 2 | ATV312HU30N4 | 5 | — | — | 100 | HxL36015 | 22 | — | — | 15 | 22 |
| | | 3 | ATV312HU40N4 | 5 | — | — | 100 | HxL36015 | 22 | — | — | 20 | 22 |
| | | 3 | ATV312HU55N4 | 22 | — | — | 100 | HxL36020 | 22 | — | — | 30 | 22 |
| | | 5 | ATV312HU75N4 | 22 | — | — | 100 | HxL36030 | 22 | — | — | 35 | 22 |
| | | 7.5 | ATV312HD11N4 | 22 | — | — | 100 | HxL36035 | 22 | — | — | 50 | 22 |
| | | 10 | ATV312HD15N4 | 22 | — | — | 100 | HxL36050 | 22 | — | — | 70 | 22 |
| | With line reactor | 0.5 | ATV312H075N4 | 5 | 5.79 | RL-00402 | 100 | HxL36015 | 65 | GV2P08 | 65 | 6 | 22 |
| | | 0.75 | ATV312HU11N4 | 5 | 4.27 | RL-00402 | 100 | HxL36015 | 65 | GV2P08 | 65 | 10 | 22 |
| | | 1 | ATV312HU15N4 | 5 | 4.27 | RL-00803 | 100 | HxL36015 | 65 | GV2P10 | 65 | 10 | 22 |
| | | 1.5 | ATV312HU22N4 | 5 | 2.77 | RL-00802 | 100 | HxL36015 | 65 | GV2P14 | 65 | 15 | 22 |
| | | 2 | ATV312HU30N4 | 5 | 2.77 | RL-00802 | 100 | HxL36015 | 65 | GV2P14 | 65 | 15 | 22 |
| | | 3 | ATV312HU40N4 | 5 | 1.68 | RL-01202 | 100 | HxL36015 | 65 | GV3P13 | 65 | 20 | 22 |
| | | 3 | ATV312HU55N4 | 22 | 1.29 | RL-01802 | 100 | HxL36020 | 65 | GV3P18 | 65 | 30 | 22 |
| | | 5 | ATV312HU75N4 | 22 | 0.912 | RL-02502 | 100 | HxL36030 | 65 | GV3P25 | 65 | 35 | 22 |
| | | 7.5 | ATV312HD11N4 | 22 | 0.694 | RL-03502 | 100 | HxL36035 | 65 | GV3P32 | 65 | 50 | 22 |
| | | 10 | ATV312HD15N4 | 22 | 0.569 | RL-04502 | 100 | HxL36050 | 65 | GV3P40 | 65 | 70 | 22 |

[1] The Altivar™ 312 has a 100k SCC rating on the output of the drive as many other drives are rated. In addition to providing a rating based on shorting the output of the drive, these short circuit rating have been obtained by testing the weakest point internal to the ATV312 per UL508C. These ratings allow proper coordination of short circuit protection. The amp rating of the short circuit protection devices in the table are maximum values. Smaller amp sizes may be used.
[2] Ratings also apply to ATV312 Type 1 product, ie: an ATV312 fitted with a conduit box.
[3] Ratings apply to an ATV312 mounted in a non-ventilated Type 1, 3R, 4(X) or 12 rated enclosure. Minimum enclosure volume is 3.375 times the drive volume .
[4] 480 V ratings are for Wye connected electrical distribution systems. GV2P* self protected manual combination starter must be used with GV2GH7 insulating barrier to meet UL 508 Type E rating. GV3P** must be used with GV3G66 and GVAM11 in order to meet UL508 rating.
[5] Fuse type can be Class J, fast acting or time delay, or Class CC.

© 2013 Schneider Electric All Rights Reserved

## Altivar™ 61 AC Drives

### Table 58: ATV61 Combination Ratings

| Altivar 61 | | | | | | | | Containment Short Circuit Current Rating [2] | | | | | | | | |
|---|---|---|---|---|---|---|---|---|---|---|---|---|---|---|---|---|
| | | | | | | | | with Circuit Breaker [3] | | | with GVxP [3] | | | with Fuses [3] | | |
| Input Voltage 50/60 Hz | (hp) | (A) | Reference: | Input Rating: (kA) [1] | Mimimum inductance (mH) | Line Reactor Reference | Output Interrupt rating: kAIC | PowerPact [4] | SCCR (kA) | Mimimum Enclosure Volume (in [3]) | GV2P/3P Type E [5] | SCCR (kA) | Mimimum Enclosure Volume (in [3]) | Fuse (A) 600 V Class J [6] | SCCR (kA) | Mimimum Enclosure Volume (in [3]) |
| **Three-phase Input, with line reactor** | | | | | | | | | | | | | | | | |
| 200/240 V Three-phase | 1 | 4.8 | ATV61H075M3 | 5 | 3 | RL00401 | 100 | HJL36015 | 100 | 4017 | GV2P10 | 65 | 1600 | 15 | 100 | 4017 |
| | 2 | 8 | ATV61HU15M3 | 5 | 1.5 | RL00801 | 100 | HJL36025 | 100 | 4017 | GV2P14 | 65 | 1600 | 25 | 100 | 4017 |
| | 3 | 11 | ATV61HU22M3 | 5 | 1.25 | RL01201 | 100 | HJL36040 | 100 | 4017 | GV3P18 | 65 | 1920 | 40 | 100 | 4017 |
| | — | 13.7 | ATV61HU30M3 | 5 | 0.8 | RL01801 | 100 | HJL36040 | 100 | 4017 | GV3P18 | 65 | 1920 | 40 | 100 | 4017 |
| | 5 | 17.5 | ATV61HU40M3 | 5 | 0.8 | RL01801 | 100 | HJL36060 | 100 | 6528 | GV3P25 | 65 | 1920 | 60 | 100 | 6528 |
| | 7.5 | 27.5 | ATV61HU55M3 | 22 | 0.5 | RL02501 | 100 | HJL36070 | 100 | 6528 | GV3P40 | 65 | 2880 | 70 | 100 | 6528 |
| | 10 | 33 | ATV61HU75M3 | 22 | 0.4 | RL03501 | 100 | HJL36110 | 100 | 6528 | GV3P50 | 65 | 4032 | 110 | 100 | 6528 |
| | 15 | 54 | ATV61HD11M3X | 22 | 0.3 | RL04501 | 100 | HJL36125 | 100 | 6528 | GV3P50 | 65 | 5760 | 125 | 100 | 6528 |
| | 20 | 66 | ATV61HD15M3X | 22 | 0.25 | RL05501 | 100 | JJL36175 | 100 | 6528 | GV3P65 | 65 | 5760 | 175 | 100 | 6528 |
| | 25 | 75 | ATV61HD18M3X | 22 | 0.2 | RL08001 | 100 | JJL36200 | 100 | 13215 | — | — | — | 200 | 100 | 13215 |
| | 30 | 88 | ATV61HD22M3X | 22 | 0.15 | RL10001 | 100 | JJL36250 | 100 | 13215 | — | — | — | 250 | 100 | 13215 |
| | 40 | 120 | ATV61HD30M3X | 22 | 0.1 | RL13001 | 100 | JJL36250 | 100 | 13215 | — | — | — | 250 | 100 | 13215 |
| | 50 | 144 | ATV61HD37M3X | 22 | 0.075 | RL16001 | 100 | JJL36250 | 100 | 13215 | — | — | — | 250 | 100 | 13215 |
| | 60 | 176 | ATV61HD45M3X | 10 | 0.055 | RL20001 | 100 | LAL36400 | 22 | 8640 | — | — | — | 400 | 22 | 8640 |
| 380/480 V Three-phase | 1 | 2.3 | ATV61H075N4 | 5 | 12 | RL00201 | 100 | HLL36015 | 100 | 4017 | GV2P08 | 65 | 1600 | 15 | 100 | 4017 |
| | 2 | 4.1 | ATV61HU15N4 | 5 | 6.5 | RL00402 | 100 | HLL36015 | 100 | 4017 | GV2P10 | 65 | 1600 | 15 | 100 | 4017 |
| | 3 | 5.8 | ATV61HU22N4 | 5 | 6.5 | RL00402 | 100 | HLL36015 | 100 | 4017 | GV2P14 | 65 | 1600 | 15 | 100 | 4017 |
| | — | 7.8 | ATV61HU30N4 | 5 | 3 | RL00802 | 100 | HLL36015 | 100 | 4017 | GV2P14 | 65 | 1920 | 15 | 100 | 4017 |
| | 5 | 10.5 | ATV61HU40N4 | 5 | 3 | RL00802 | 100 | HLL36025 | 100 | 4017 | GV3P13 | 65 | 1920 | 25 | 100 | 4017 |
| | 7.5 | 14.3 | ATV61HU55N4 | 22 | 2.5 | RL01202 | 100 | HLL36035 | 100 | 6528 | GV3P25 | 65 | 2880 | 35 | 100 | 6528 |
| | 10 | 17.6 | ATV61HU75N4 | 22 | 1.5 | RL01802 | 100 | HLL36050 | 100 | 6528 | GV3P25 | 65 | 2880 | 50 | 100 | 6528 |
| | 15 | 27.7 | ATV61HD11N4 | 22 | 1.2 | RL02502 | 100 | HLL36060 | 100 | 6528 | GV3P40 | 65 | 4032 | 60 | 100 | 6528 |
| | 20 | 33 | ATV61HD15N4 | 22 | 0.8 | RL03502 | 100 | HLL36080 | 100 | 6528 | GV3P50 | 65 | 5760 | 80 | 100 | 6528 |
| | 25 | 41 | ATV61HD18N4 | 22 | 0.8 | RL03502 | 100 | HLL36100 | 100 | 6528 | GV3P50 | 65 | 8640 | 100 | 100 | 6528 |
| | 30 | 48 | ATV61HD22N4 | 22 | 0.7 | RL04502 | 100 | HLL36125 | 100 | 6528 | GV3P50 | 65 | 8640 | 125 | 100 | 6528 |
| | 40 | 66 | ATV61HD30N4 | 22 | 0.5 | RL05502 | 100 | HLL36150 | 100 | 6528 | GV3P65 | 65 | 10368 | 150 | 100 | 6528 |
| | 50 | 79 | ATV61HD37N4 | 22 | 0.4 | RL08002 | 100 | JLL36175 | 100 | 13215 | — | — | — | 175 | 100 | 13215 |
| | 60 | 94 | ATV61HD45N4 | 22 | 0.4 | RL08002 | 100 | JLL36225 | 100 | 13215 | — | — | — | 225 | 100 | 13215 |
| | 75 | 116 | ATV61HD55N4 | 22 | 0.3 | RL10002 | 100 | JLL36250 | 100 | 13215 | — | — | — | 250 | 100 | 13215 |
| | 100 | 160 | ATV61HD75N4 | 22 | 0.2 | RL13002 | 100 | JLL36250 | 100 | 38250 | — | — | — | 250 | 100 | 38250 |
| | 100 | 160 | ATV61HD75N4 | 22 | 0.2 | RL13002 | 100 | KCL34250 | 100 | 38250 | — | — | — | 250 | 100 | 38250 |
| 575 V Three-phase | 3 | 3.9 | ATV61HU22S6X | 22 | 9 | RL00403 | 100 | HLL36015 | 50 | 3898 | — | — | — | 6 | 100 | 3898 |
| | — | 5.8 | ATV61HU30S6X | 22 | 9 | RL00403 | 100 | HLL36015 | 50 | 3898 | — | — | — | 6 | 100 | 3898 |
| | 5 | 6.1 | ATV61HU40S6X | 22 | 5 | RL00803 | 100 | HLL36015 | 50 | 3898 | — | — | — | 10 | 100 | 3898 |
| | 7.5 | 9 | ATV61HU55S6X | 22 | 3 | RL01203 | 100 | HLL36020 | 50 | 3898 | — | — | — | 15 | 100 | 3898 |
| | 10 | 11 | ATV61HU75S6X | 22 | 2.5 | RL01203 | 100 | HLL36025 | 50 | 3898 | — | — | — | 20 | 100 | 3898 |


© 2013 Schneider Electric All Rights Reserved

**Table 58: ATV61 Combination Ratings** *(continued)*

| Altivar 61 | | | | | | | | Containment Short Circuit Current Rating [2] | | | | | | | | |
|---|---|---|---|---|---|---|---|---|---|---|---|---|---|---|---|---|
| | | | | | | | | with Circuit Breaker [3] | | | with GVxP [3] | | | with Fuses [3] | | |
| Input Voltage 50/60 Hz | (hp) | (A) | Reference: | Input Rating: (kA) [1] | Mimimum inductance (mH) | Line Reactor Reference | Output Interrupt rating: kAIC | PowerPact [4] | SCCR (kA) | Mimimum Enclosure Volume (in [3]) | GV2P/3P Type E [5] | SCCR (kA) | Mimimum Enclosure Volume (in [3]) | Fuse (A) 600 V Class J [6] | SCCR (kA) | Mimimum Enclosure Volume (in [3]) |
| 500/690 V Three-phase | 3 | 3.9 | ATV61HU30Y | 22 | 9 | RL00403 | 100 | — | — | — | — | — | — | 10 | 100 | 8640 |
| | — | 5.8 | ATV61HU40Y | 22 | 5 | RL00803 | 100 | — | — | — | — | — | — | 10 | 100 | 8640 |
| | 5 | 6.1 | ATV61HU55Y | 22 | 5 | RL00803 | 100 | — | — | — | — | — | — | 15 | 100 | 8640 |
| | 7.5 | 9 | ATV61HU75Y | 22 | 3 | RL00802 | 100 | — | — | — | — | — | — | 20 | 100 | 8640 |
| | 10 | 11 | ATV61HD11Y | 22 | 2.5 | RL01202 | 100 | — | — | — | — | — | — | 25 | 100 | 8640 |
| | 15 | 17 | ATV61HD15Y | 22 | 1.5 | RL01802 | 100 | — | — | — | — | — | — | 35 | 100 | 8640 |
| | 20 | 22 | ATV61HD18Y | 22 | 1.2 | RL02502 | 100 | — | — | — | — | — | — | 45 | 100 | 8640 |
| | 25 | 27 | ATV61HD22Y | 22 | 1.2 | RL02502 | 100 | — | — | — | — | — | — | 60 | 100 | 8640 |
| | 30 | 32 | ATV61HD30Y | 22 | 0.8 | RL03502 | 100 | — | — | — | — | — | — | 60 | 100 | 8640 |
| | 40 | 41 | ATV61HD37Y | 22 | 0.7 | RL04502 | 100 | — | — | — | — | — | — | 90 | 100 | 9792 |
| | 50 | 52 | ATV61HD45Y | 22 | 0.5 | RL05502 | 100 | — | — | — | — | — | — | 100 | 100 | 9792 |
| | 60 | 62 | ATV61HD55Y | 22 | 0.4 | RL08002 | 100 | — | — | — | — | — | — | 125 | 100 | 9792 |
| | 75 | 77 | ATV61HD75Y | 22 | 0.4 | RL08002 | 100 | — | — | — | — | — | — | 150 | 100 | 9792 |
| | 100 | 99 | ATV61HD90Y | 22 | 0.3 | RL10002 | 100 | — | — | — | — | — | — | 175 | 100 | 9792 |
| **Single-phase Input, without line reactor** | | | | | | | | | | | | | | | | |
| 200/240 V Single-phase | 0.5 | 3 | ATV61H075M3 | 5 | — | — | 100 | HJL36015 | 5 | 4017 | GV2P104 | 5 | 1600 | 15 | 5 | 1078 |
| | 1 | 4.8 | ATV61HU15M3 | 5 | — | — | 100 | HJL36025 | 5 | 4017 | GV2P14 | 5 | 1600 | 25 | 5 | 1078 |
| | 2 | 8 | ATV61HU22M3 | 5 | — | — | 100 | HJL36040 | 5 | 4017 | GV3P18 | 5 | 4017 | 40 | 5 | 1550 |
| | 3 | 11 | ATV61HU30M3 | 5 | — | — | 100 | HJL36040 | 5 | 4017 | GV3P18 | 5 | 1920 | 40 | 5 | 1550 |
| | 5 | 17.5 | ATV61HU75M3 | 5 | — | — | 100 | HJL36110 | 5 | 6528 | GV3P50 | 5 | 4032 | 110 | 5 | 2719 |
| | 7.5 | 27.5 | ATV61HD15M3X | 5 | — | — | 100 | JJL36175 | 5 | 6528 | GV3P65 | 5 | 5760 | 175 | 5 | 4036 |
| | 10 | 33 | ATV61HD18M3X | 5 | — | — | 100 | JJL36200 | 5 | 13215 | — | — | — | 200 | 5 | 4900 |
| | 15 | 54 | ATV61HD30M3X | 5 | — | — | 100 | JJL36250 | 5 | 13215 | — | — | — | 250 | 5 | 9640 |
| | 20 | 66 | ATV61HD37M3X | 5 | — | — | 100 | JJL36250 | 5 | 13215 | — | — | — | 250 | 5 | 9640 |
| | 25 | 75 | ATV61HD45M3X | 10 | — | — | 100 | — | — | — | — | — | — | 300 | 10 | 9640 |
| **Single-phase Input, line reactor** | | | | | | | | | | | | | | | | |
| 200/240 V Single-phase | — | 13.7 | ATV61HU40M3 | 5 | 1 | RL02502 | 100 | HJL36060 | 5 | 6528 | GV3P25 | 65 | 1920 | 60 | 5 | 1550 |
| | 5 | 17.5 | ATV61HU55M3 | 5 | 0.8 | RL03502 | 100 | HJL36070 | 5 | 6528 | GV3P40 | 65 | 2880 | 70 | 5 | 1987 |
| | 7.5 | 27.5 | ATV61HU75M3 | 22 | 0.5 | RL05502 | 100 | HJL36110 | 22 | 6528 | GV3P50 | 65 | 4032 | 110 | 22 | 2719 |
| | 10 | 33 | ATV61HD15M3X | 22 | 0.4 | RL08002 | 100 | JJL36175 | 22 | 6528 | GV3P65 | 65 | 5760 | 175 | 22 | 4036 |
| | 15 | 54 | ATV61HD22M3X | 22 | 0.3 | RL10002 | 100 | JJL36250 | 22 | 13215 | — | — | — | 250 | 22 | 4900 |
| | 20 | 66 | ATV61HD30M3X | 22 | 0.2 | RL13002 | 100 | JJL36250 | 22 | 13215 | — | — | — | 250 | 22 | 9640 |
| | 25 | 75 | ATV61HD37M3X | 22 | 0.15 | RL16002 | 100 | JJL36250 | 100 | 13215 | — | — | — | 250 | 22 | 9640 |
| | 30 | 88 | ATV61HD45M3X | 22 | 0.185 | RL20003B14 | 100 | — | — | 8640 | — | — | — | 300 | 22 | 9640 |

[1] This column shows the maximum prospective short circuit current value the Altivar™ 61 can be installed on without adding impedance to the drive. Electrical distribution systems with a higher prospective short circuit current will cause higher input currents in the front end of the drive. Add the inductance referred to in the table at the input of the drive if installing the drive on a system with higher available fault current.

[2] The Altivar 61 has a 100k SCC rating on the output of the drive. In addition to providing a rating based on shorting the output of the drive, these short circuit rating have been obtained by shorting components internal to the Altivar 61 These ratings allow proper coordination of short circuit protection. The integral solid state short circuit protection in the drive does not provide branch circuit protection. Branch circuit protection must be provided in accordance with the National Electrical Code and any local codes. The listed line reactor or minimum impedance is required to obtain ratings above the Input Rating.

[3] Ratings apply to an Altivar 61 mounted in a non-ventilated Type 1, 3R, 4(X) or 12 rated enclosure.

[4] Circuit breakers with lower interrupt ratings can be used, such as:
- For 200 / 240 Vac, replace with HGL or JGL for 65kA interrupt rating.
- For 380 / 480, replace with HGL or JGL for 35kA or HJL or JJL for 65kA interrupt rating.
- For 575 / 600, replace with HJL for 25kA or HGL for 18kA, or HDL for 14kA interrupt rating.

[5] 480 V ratings are for Wye connected electrical distribution systems. GV2P* self protected manual combination starter must be used with GV2GH7 insulating barrier to meet UL 508 Type E rating GV3Ppp self protected manual combination starter must be used with GV3G66 + GVAM11 insulating barrier to meet UL 508 Type E rating. GV3P* self protected manual combination starter must be used with GV3G66 + GVAM11 insulating barrier to meet UL 508 Type E rating.

[6] Use Bussmann fuses. Fuse type can be fast acting or time delay Class J, or Class CC unless otherwise noted. For 575 - 690 Vac rated drives, use Ferraz Shawmut Class J fast acting fuse.

© 2013 Schneider Electric All Rights Reserved

## Table 59: ATV61 Combination Ratings

| Altivar™ 61 | | | | | | | | Containment Short Circuit Current Rating [2] | | | | | |
|---|---|---|---|---|---|---|---|---|---|---|---|---|---|
| | | | | | | | | with Circuit Breaker [3] | | | with Fuses [3] | | |
| Input Voltage 50/60 Hz | (hp) | (A) | Reference: | Input Rating: (kA) [1] | Mimimum inductance (mH) | Line Reactor Reference | Output Interrupt rating: kAIC | PowerPact [4] | SCCR (kA) | Mimimum Enclosure Volume (in 3) | Fuse (A) 600 V Class J [6] | SCCR (kA) | Mimimum Enclosure Volume (in 3) |
| **Three-phase Input, with line reactor** | | | | | | | | | | | | | |
| 200/240 V Three-phase | 75 | 221 | ATV61HD55M3X | 35 | 0.045 | RL25001 | 100 | — | — | — | 350 | 10 | 22749 |
| | 100 | 285 | ATV61HD75M3X | 35 | 0.04 | RL32001 | 100 | — | — | — | 350 | 10 | 22749 |
| | 125 | 359 | ATV61HD90M3X | 35 | 0.03 | RL40001 | 100 | — | — | — | 450 | 10 | 22749 |
| 380/480 V Three-phase | 125 | 179 | ATV61HD90N4 | 35 | 0.15 | RL16002 | 100 | LIL36300 | 100 | 45900 | 300 | 100 | 45900 |
| | 150 | 215 | ATV61HC11N4 | 35 | 0.11 | RL20002 | 100 | LIL36400 | 100 | 45900 | 400 | 100 | 45900 |
| | 200 | 259 | ATV61HC13N4 | 35 | 0.09 | RL25002 | 100 | LIL36400 | 100 | 45900 | 400 | 100 | 45900 |
| | 250 | 314 | ATV61HC16N4 | 50 | 0.075 | RL32002 | 100 | MHL36600 | 100 | 45900 | 600 | 100 | 45900 |
| | 350 | 427 | ATV61HC22N4 | 50 | 0.05 | RL50002 | 100 | — | — | — | 600 | 100 | 53550 |
| | 400 | 481 | ATV61HC25N4 | 50 | 0.05 | RL50002 | 100 | — | — | — | 600 | 100 | 53550 |
| | 500 | 616 | ATV61HC31N4 | 50 | 0.04 | RL60002 | 100 | — | — | — | 600 [5] | 100 | 53550 |
| | 600 | 759 | ATV61HC40N4 | 30 | 0.029 | RL75002 | 100 | — | — | — | 900 [7] | 30 | 95579 |
| | 700 | 941 | ATV61HC50N4 | 30 | 0.027 | RL85002B14 | 100 | — | — | — | 2 x 600 [6] | 42 | 95579 |
| | 900 | 1188 | ATV61HC63N4 | 30 | 0.019 | RL120002B14 | 100 | — | — | — | 2 x 800 [5] | 42 | 120265 |
| 500/690 V Three-phase | 125 | 125 | ATV61HC11Y | 28 | 0.2 | RL13002 | 100 | — | — | — | 160 [6] | 28 | 31117 |
| | 150 | 150 | ATV61HC13Y | 28 | 0.15 | RL16002 | 100 | — | — | — | 200 [6] | 28 | 31117 |
| | — | 180 | ATV61HC16Y | 35 | 0.11 | RL20002 | 100 | — | — | — | 250 [6] | 35 | 31117 |
| | 200 | 220 | ATV61HC20Y | 35 | 0.11 | RL20002 | 100 | — | — | — | 300 [6] | 35 | 31117 |
| | 250 | 290 | ATV61HC25Y | 35 | 0.09 | RL25002 | 100 | — | — | — | 400 [6] | 35 | 54450 |
| | 350 | 355 | ATV61HC31Y | 35 | 0.06 | RL40002 | 100 | — | — | — | 500 [6] | 35 | 54450 |
| | 450 | 420 | ATV61HC40Y | 42 | 0.05 | RL50002 | 100 | — | — | — | 600 [6] | 42 | 54450 |
| | 550 | 543 | ATV61HC50Y | 42 | 0.04 | RL60002 | 100 | — | — | — | 2 x 400 [6] | 42 | 120265 |
| | 700 | 675 | ATV61HC63Y | 42 | 0.029 | RL75002 | 100 | — | — | — | 2 x 500 [6] | 42 | 120265 |
| | 800 | 840 | ATV61HC80Y | 42 | 0.022 | RL100002B14 | 100 | — | — | — | 2 x 600 [6] | 42 | 120265 |

[1] Electrical distribution systems with a higher prospective short circuit current will cause higher input currents in the front end of the drive. Add the inductance referred to in the table at the input of the drive if installing the drive on a system with higher prospective short circuit current. This column shows the maximum prospective short circuit current value the 200/240V and 380/480V Altivar 61 can be installed on without adding impedance to the drive. A 3% (minimum) input line reactor or equivalent inductance is required for these 575/690 Vac Altivar 61s and provides the listed value with the listed fuse protection. Add the inductance refered to in the table. Line reactor references are rated for 600Vac.

[2] The Altivar 61 has a 100k SCC rating on the output of the drive. In addition to providing a rating based on shorting the output of the drive, these short circuit rating have been obtained by shorting components internal to the Altivar 61. These ratings allow proper coordination of short circuit protection. Note: The integral solid state short circuit protection in the drive does not provide branch circuit protection. Branch circuit protection must be provided in accordance with the National Electrical Code and any local codes. The listed line reactor or minimum impedance is required to obtain ratings above the Input Rating.

[3] Ratings apply to an Altivar 61 mounted in a non-ventilated Type 1, 3R, 4(X) or 12 rated enclosure. Minimum enclosure volume allows for the specified SCCR. Your application specific thermal requirements may require a larger enclosure

[4] Use Bussmann fuses. Fuse type can be fast acting or time delay Class J, unless otherwise noted.

[5] Fuse type must be Class T fast acting fuses.

[6] Fuse type must be fast acting Class J fuses unless otherwise noted.

[7] Fuse type must be semi-conductor fuses.


© 2013 Schneider Electric All Rights Reserved

## Altivar™ 71 AC Drives

### Table 60: ATV71 Combination Ratings

| Altivar 71 | | | | | | | | Containment Short Circuit Current Ratings [2] | | | | | | | | |
|---|---|---|---|---|---|---|---|---|---|---|---|---|---|---|---|---|
| | | | | | | | | with Circuit Breaker [3] | | | with GVxP [3] | | | with Fuses [3] | | |
| Input Voltage 50/60 Hz | (hp) | (A) | Reference: | Input Rating: (kA) [1] | Mimimum inductance (mH) | Line Reactor Reference | Output Interrupt rating: kAIC | PowerPact [4] | SCCR (kA) | Mimimum Enclosure Volume (in 3) | GV2P/3P Type E [5] | SCCR (kA) | Mimimum Enclosure Volume (in 3) | Fuse (A) 600 V Class J [6] | SCCR (kA) | Mimimum Enclosure Volume (in 3) |
| **Three-phase Input, with line reactor** | | | | | | | | | | | | | | | | |
| 200/240 V Three-phase | 0.5 | 3 | ATV71H037M3 | 5 | 3 | RL00401 | 100 | HJL36015 | 100 | 4017 | GV2P08 | 65 | 1600 | 15 | 100 | 4017 |
| | 1 | 4.8 | ATV71H075M3 | 5 | 1.5 | RL00401 | 100 | HJL36015 | 100 | 4017 | GV2P10 | 65 | 1600 | 15 | 100 | 4017 |
| | 2 | 8 | ATV71HU15M3 | 5 | 1.25 | RL00801 | 100 | HJL36025 | 100 | 4017 | GV2P14 | 65 | 1600 | 25 | 100 | 4017 |
| | 3 | 11 | ATV71HU22M3 | 5 | 0.8 | RL01201 | 100 | HJL36035 | 100 | 4017 | GV3P18 | 65 | 1920 | 35 | 100 | 4017 |
| | — | 13.7 | ATV71HU30M3 | 5 | 0.8 | RL01801 | 100 | HJL36035 | 100 | 4017 | GV3P18 | 65 | 1920 | 35 | 100 | 4017 |
| | 5 | 17.5 | ATV71HU40M3 | 5 | 0.5 | RL01801 | 100 | HJL36060 | 100 | 4017 | GV3P25 | 65 | 1920 | 60 | 100 | 4017 |
| | 7.5 | 27.5 | ATV71HU55M3 | 22 | 0.4 | RL02501 | 100 | HJL36080 | 100 | 6528 | GV3P40 | 65 | 2880 | 80 | 100 | 6528 |
| | 10 | 33 | ATV71HU75M3 | 22 | 0.3 | RL03501 | 100 | HJL36110 | 100 | 6528 | GV3P50 | 65 | 4032 | 110 | 100 | 6528 |
| | 15 | 54 | ATV71HD11M3X | 22 | 0.25 | RL04501 | 100 | HJL36110 | 100 | 6528 | GV3P50 | 65 | 5760 | 110 | 100 | 6528 |
| | 20 | 66 | ATV71HD15M3X | 22 | 0.2 | RL05501 | 100 | HJL36150 | 100 | 6528 | GV3P65 | 65 | 5760 | 150 | 100 | 6528 |
| | 25 | 75 | ATV71HD18M3X | 22 | 0.15 | RL08001 | 100 | JJL36175 | 100 | 13215 | — | — | — | 175 | 100 | 13215 |
| | 30 | 88 | ATV71HD22M3X | 22 | 0.1 | RL10001 | 100 | JJL36200 | 100 | 13215 | — | — | — | 200 | 100 | 13215 |
| | 40 | 120 | ATV71HD30M3X | 22 | 0.075 | RL13001 | 100 | JJL36250 | 100 | 13215 | — | — | — | 250 | 100 | 13215 |
| | 50 | 144 | ATV71HD37M3X | 22 | 0.055 | RL16001 | 100 | JJL36250 | 100 | 13215 | — | — | — | 250 | 100 | 13215 |
| | 60 | 176 | ATV71HD45M3X | 10 | 0.055 | RL20001 | 100 | LAL36400 | 22 | 8640 | — | — | — | 400 | 22 | 8640 |
| 308/480 V Three-phase | 1 | 2.3 | ATV71H075N4 | 5 | 12 | RL00201 | 100 | HLL36015 | 100 | 4017 | GV2P08 | 65 | 1600 | 15 | 100 | 4017 |
| | 2 | 4.1 | ATV71HU15N4 | 5 | 6.5 | RL00402 | 100 | HLL36015 | 100 | 4017 | GV2P10 | 65 | 1600 | 15 | 100 | 4017 |
| | 3 | 5.8 | ATV71HU22N4 | 5 | 6.5 | RL00402 | 100 | HLL36015 | 100 | 4017 | GV2P14 | 65 | 1600 | 15 | 100 | 4017 |
| | — | 7.8 | ATV71HU30N4 | 5 | 3 | RL00802 | 100 | HLL36015 | 100 | 4017 | GV2P14 | 65 | 1920 | 15 | 100 | 4017 |
| | 5 | 10.5 | ATV71HU40N4 | 5 | 3 | RL00802 | 100 | HLL36025 | 100 | 4017 | GV3P13 | 65 | 1920 | 25 | 100 | 4017 |
| | 7.5 | 14.3 | ATV71HU55N4 | 22 | 2.5 | RL01202 | 100 | HLL36040 | 100 | 6528 | GV3P25 | 65 | 2880 | 40 | 100 | 6528 |
| | 10 | 17.6 | ATV71HU75N4 | 22 | 1.5 | RL01802 | 100 | HLL36050 | 100 | 6528 | GV3P25 | 65 | 2880 | 50 | 100 | 6528 |
| | 15 | 27.7 | ATV71HD11N4 | 22 | 1.2 | RL02502 | 100 | HLL36070 | 100 | 6528 | GV3P40 | 65 | 4032 | 70 | 100 | 6528 |
| | 20 | 33 | ATV71HD15N4 | 22 | 0.8 | RL03502 | 100 | HLL36100 | 100 | 6528 | GV3P50 | 65 | 5760 | 100 | 100 | 6528 |
| | 25 | 41 | ATV71HD18N4 | 22 | 0.8 | RL03502 | 100 | HLL36090 | 100 | 6528 | GV3P50 | 65 | 8640 | 90 | 100 | 6528 |
| | 30 | 48 | ATV71HD22N4 | 22 | 0.7 | RL04502 | 100 | HLL36100 | 100 | 6528 | GV3P50 | 65 | 8640 | 100 | 100 | 6528 |
| | 40 | 66 | ATV71HD30N4 | 22 | 0.5 | RL05502 | 100 | HLL36125 | 100 | 6528 | GV3P65 | 65 | 10368 | 125 | 100 | 6528 |
| | 50 | 79 | ATV71HD37N4 | 22 | 0.4 | RL08002 | 100 | HLL36150 | 100 | 13215 | — | — | — | 150 | 100 | 13215 |
| | 60 | 94 | ATV71HD45N4 | 22 | 0.4 | RL08002 | 100 | JLL36200 | 100 | 13215 | — | — | — | 200 | 100 | 13215 |
| | 75 | 116 | ATV71HD55N4 | 22 | 0.3 | RL10002 | 100 | JLL36225 | 100 | 13215 | — | — | — | 225 | 100 | 13215 |
| | 100 | 160 | ATV71HD75N4 | 22 | 0.2 | RL13002 | 100 | JLL36250 | 100 | 38250 | — | — | — | 250 | 100 | 38250 |
| | 100 | 160 | ATV71HD75N4 | 22 | 0.2 | RL13002 | 100 | KCL34250 | 100 | 38250 | — | — | — | 250 | 100 | 38250 |
| 575 V Three-phase | 2 | 2.7 | ATV71HU15S6X | 22 | 9 | RL00403 | 100 | HLL36015 | 50 | 3898 | — | — | | 6 | 100 | 3898 |
| | 3 | 3.9 | ATV71HU22S6X | 22 | 9 | RL00403 | 100 | HLL36015 | 50 | 3898 | — | — | | 6 | 100 | 3898 |
| | — | 5.8 | ATV71HU30S6X | 22 | 9 | RL00403 | 100 | HLL36015 | 50 | 3898 | — | — | | 6 | 100 | 3898 |
| | 5 | 6.1 | ATV71HU40S6X | 22 | 5 | RL00803 | 100 | HLL36015 | 50 | 3898 | — | — | | 10 | 100 | 3898 |
| | 7.5 | 9 | ATV71HU55S6X | 22 | 3 | RL01203 | 100 | HLL36020 | 50 | 3898 | — | — | | 15 | 100 | 3898 |
| | 10 | 11 | ATV71HU75S6X | 22 | 2.5 | RL01203 | 100 | HLL36025 | 50 | 3898 | — | — | | 20 | 100 | 3898 |

© 2013 Schneider Electric All Rights Reserved

## Altivar™ 71 AC Drives

**Table 60: ATV71 Combination Ratings** *(continued)*

| Altivar 71 | | | | | | | | Containment Short Circuit Current Ratings [2] | | | | | | | | |
|---|---|---|---|---|---|---|---|---|---|---|---|---|---|---|---|---|
| | | | | | | | | with Circuit Breaker [3] | | | with GVxP [3] | | | with Fuses [3] | | |
| Input Voltage 50/60 Hz | (hp) | (A) | Reference: | Input Rating: (kA) [1] | Mimimum inductance (mH) | Line Reactor Reference | Output Interrupt rating: kAIC | PowerPact [4] | SCCR (kA) | Mimimum Enclosure Volume (in [3]) | GV2P/3P Type E [5] | SCCR (kA) | Mimimum Enclosure Volume (in [3]) | Fuse (A) 600 V Class J [6] | SCCR (kA) | Mimimum Enclosure Volume (in [3]) |
| 500/690 V Three-phase | 2 | 2.7 | ATV71HU22Y | 22 | 9 | RL00403 | 100 | — | — | — | — | — | — | 6 | 100 | 8640 |
| | 3 | 3.9 | ATV71HU30Y | 22 | 9 | RL00403 | 100 | — | — | — | — | — | — | 10 | 100 | 8640 |
| | — | 5.8 | ATV71HU40Y | 22 | 5 | RL00803 | 100 | — | — | — | — | — | — | 10 | 100 | 8640 |
| | 5 | 6.1 | ATV71HU55Y | 22 | 5 | RL00803 | 100 | — | — | — | — | — | — | 15 | 100 | 8640 |
| | 7.5 | 9 | ATV71HU75Y | 22 | 3 | RL00802 | 100 | — | — | — | — | — | — | 20 | 100 | 8640 |
| | 10 | 11 | ATV71HD11Y | 22 | 2.5 | RL01202 | 100 | — | — | — | — | — | — | 25 | 100 | 8640 |
| | 15 | 17 | ATV71HD15Y | 22 | 1.5 | RL01802 | 100 | — | — | — | — | — | — | 35 | 100 | 8640 |
| | 20 | 22 | ATV71HD18Y | 22 | 1.2 | RL02502 | 100 | — | — | — | — | — | — | 45 | 100 | 8640 |
| | 25 | 27 | ATV71HD22Y | 22 | 1.2 | RL02502 | 100 | — | — | — | — | — | — | 60 | 100 | 8640 |
| | 30 | 32 | ATV71HD30Y | 22 | 0.8 | RL03502 | 100 | — | — | — | — | — | — | 60 | 100 | 8640 |
| | 40 | 41 | ATV71HD37Y | 22 | 0.7 | RL04502 | 100 | — | — | — | — | — | — | 90 | 100 | 9792 |
| | 50 | 52 | ATV71HD45Y | 22 | 0.5 | RL05502 | 100 | — | — | — | — | — | — | 100 | 100 | 9792 |
| | 60 | 62 | ATV71HD55Y | 22 | 0.4 | RL08002 | 100 | — | — | — | — | — | — | 125 | 100 | 9792 |
| | 75 | 77 | ATV71HD75Y | 22 | 0.4 | RL08002 | 100 | — | — | — | — | — | — | 150 | 100 | 9792 |
| | 100 | 99 | ATV71HD90Y | 22 | 0.3 | RL10002 | 100 | — | — | — | — | — | — | 175 | 100 | 9792 |
| **Single-phase Input, without line reactor** | | | | | | | | | | | | | | | | |
| 200/240 V Single-phase | 0.5 | 3 | ATV71H075M3 | 5 | — | — | 100 | HJL36015 | 5 | 4017 | GV2P10 | 5 | 1600 | 15 | 5 | 1078 |
| | 1 | 4.8 | ATV71HU15M3 | 5 | — | — | 100 | HJL36025 | 5 | 4017 | GV2P14 | 5 | 1600 | 25 | 5 | 1078 |
| | 2 | 8 | ATV71HU22M3 | 5 | — | — | 100 | HJL36035 | 5 | 4017 | GV3P18 | 5 | 4017 | 35 | 5 | 1550 |
| | 3 | 11 | ATV71HU30M3 | 5 | — | — | 100 | HJL36035 | 5 | 4017 | GV3P18 | 5 | 1920 | 35 | 5 | 1550 |
| | 5 | 17.5 | ATV71HU75M3 | 5 | — | — | 100 | HJL36110 | 5 | 6528 | GV3P50 | 5 | 4032 | 110 | 5 | 2719 |
| | 7.5 | 27.5 | ATV71HD15M3X | 5 | — | — | 100 | HJL36150 | 5 | 6528 | GV3P65 | 5 | 5760 | 150 | 5 | 4036 |
| | 10 | 33 | ATV71HD18M3X | 5 | — | — | 100 | JJL36175 | 5 | 13215 | — | — | — | 175 | 5 | 4900 |
| | 15 | 54 | ATV71HD30M3X | 5 | — | — | 100 | JJL36250 | 5 | 13215 | — | — | — | 250 | 5 | 9640 |
| | 20 | 66 | ATV71HD37M3X | 5 | — | — | 100 | JJL36250 | 5 | 13215 | — | — | — | 250 | 5 | 9640 |
| | 25 | 75 | ATV71HD45M3X | 10 | — | — | 100 | — | — | — | — | — | — | 300 | 10 | 9640 |
| **Single-phase Input, with line reactor** | | | | | | | | | | | | | | | | |
| 200/240 V Single-phase | — | 13.7 | ATV71HU40M3 | 5 | 1 | RL02502 | 100 | HJL36060 | 5 | 6528 | GV3P25 | 65 | 1920 | 60 | 5 | 1550 |
| | 5 | 17.5 | ATV71HU55M3 | 5 | 0.8 | RL03502 | 100 | HJL36080 | 5 | 6528 | GV3P40 | 65 | 2880 | 80 | 5 | 1987 |
| | 7.5 | 27.5 | ATV71HU75M3 | 22 | 0.5 | RL05502 | 100 | HJL36110 | 22 | 6528 | GV3P50 | 65 | 4032 | 110 | 22 | 2719 |
| | 10 | 33 | ATV71HD15M3X | 22 | 0.4 | RL08002 | 100 | HJL36150 | 22 | 6528 | GV3P65 | 65 | 5760 | 150 | 22 | 4036 |
| | 15 | 54 | ATV71HD22M3X | 22 | 0.3 | RL10002 | 100 | JJL36200 | 22 | 13215 | — | — | — | 200 | 22 | 4900 |
| | 20 | 66 | ATV71HD30M3X | 22 | 0.2 | RL13002 | 100 | JJL36250 | 22 | 6528 | — | — | — | 250 | 22 | 9640 |
| | 25 | 75 | ATV71HD37M3X | 22 | 0.15 | RL16002 | 100 | JJL36250 | 22 | 6528 | — | — | — | 250 | 22 | 9640 |
| | 30 | 88 | ATV71HD45M3X | 22 | 0.185 | RL20003B14 | 100 | LAL36400 | 22 | 8640 | — | — | — | 300 | 22 | 9640 |

[1] This column shows the maximum prospective short circuit current value the Altivar™ 71 can be installed on without adding impedance to the drive. Electrical distribution systems with a higher prospective short circuit current will cause higher input currents in the front end of the drive. Add the inductance referred to in the table at the input of the drive if installing the drive on a system with higher prospective short circuit current.

[2] The Altivar 71 has a 100k SCC rating on the output of the drive. In addition to providing a rating based on shorting the output of the drive, these short circuit rating have been obtained by shorting components internal to the Altivar 71. These ratings allow proper coordination of short circuit protection. The integral solid state short circuit protection in the drive does not provide branch circuit protection. Branch circuit protection must be provided in accordance with the National Electrical Code and any local codes. The listed line reactor or minimum impedance is required to obtain ratings above the Input Rating.

[3] Ratings apply to an Altivar 71 mounted in a non-ventilated Type 1, 3R, 4(X) or 12 rated enclosure. Minimum enclosure volume allows for the specified SCCR. Your application specific thermal requirements may require a larger enclosure.

[4] Circuit breakers with lower interrupt ratings can be used, such as:
- For 200/240 Vac, replace with HGL or JGL for 65kA interrupt rating.
- For 380/480, replace with HGL or JGL for 35kA or HJL or JJL for 65kA interrupt rating.
- For 575/600, replace with HJL for 25kA or HGL for 18kA, or HDL for 14kA interrupt rating

[5] 480 V ratings are for Wye connected electrical distribution systems. GV2P* self protected manual combination starter must be used with GV2GH7 insulating barrier to meet UL 508 Type E rating. GV3P* self protected manual combination starter must be used with GV3G66 + GVAM11 insulating barrier to mett UL 509 Type E rating.

[6] Use Bussmann fuses. Fuse type can be fast acting or time delay Class J, or Class CC unless otherwise noted. For 575–690 Vac rated drives, use Ferraz Shawmut Class J fast acting fuse.


© 2013 Schneider Electric All Rights Reserved

**Table 61: ATV71 High Horsepower Combination Ratings**

| Altivar™ 71 | | | | | | | | Containment Short Circuit Current Rating [2] | | | | | |
|---|---|---|---|---|---|---|---|---|---|---|---|---|---|
| | | | | | | | | with Circuit Breaker [3] | | | with Fuses[3] | | |
| Input Voltage 50/60 Hz | (hp) | (A) | Reference: | Input Rating: (kA) [1] | Mimimum inductance (mH) | Line Reactor Reference | Output Interrupt rating: kAIC | PowerPact [4] | SCCR (kA) | Mimimum Enclosure Volume (in [3]) | Fuse (A) 600 V Class J [4] | SCCR (kA) | Mimimum Enclosure Volume (in [3]) |
| **Three-phase Input, with line reactor** | | | | | | | | | | | | | |
| 200/240 V Three-phase | 75 | 221 | ATV71HD55M3X | 35 | 0.045 | RL25001 | 100 | — | — | — | 350 | 10 | 22749 |
| | 100 | 285 | ATV71HD75M3X | 35 | 0.04 | RL32001 | 100 | — | — | — | 450 | 10 | 28416 |
| 380/480 V Three-phase | 125 | 179 | ATV71HD90N4 | 35 | 0.15 | RL16002 | 100 | LIL36300 | 100 | 45900 | 300 | 100 | 45900 |
| | 150 | 215 | ATV71HC11N4 | 35 | 0.11 | RL20002 | 100 | LIL36300 | 100 | 45900 | 300 | 100 | 45900 |
| | 200 | 259 | ATV71HC13N4 | 35 | 0.09 | RL25002 | 100 | LIL36400 | 100 | 45900 | 400 | 100 | 45900 |
| | 250 | 314 | ATV71HC16N4 | 50 | 0.075 | RL32002 | 100 | — | — | — | 400 | 100 | 45900 |
| | 300 | 387 | ATV71HC20N4 | 50 | 0.06 | RL40002 | 100 | — | — | — | 500 | 100 | 53550 |
| | 400 | 481 | ATV71HC25N4 | 50 | 0.05 | RL50002 | 100 | — | — | — | 600 | 100 | 53550 |
| | 450 | 550 | ATV71HC28N4 | 50 | 0.04 | RL60002 | 100 | — | — | — | 700 [5] | 18 | 53550 |
| | 500 | 616 | ATV71HC31N4 | 30 | 0.04 | RL60002 | 100 | — | — | — | 800 [5] | 30 | 95579 |
| | 600 | 759 | ATV71HC40N4 | 30 | 0.029 | RL75002 | 100 | — | — | — | 2 x 500 [6] | 30 | 95579 |
| | 700 | 941 | ATV71HC50N4 | 30 | 0.027 | RL85002B14 | 100 | — | — | — | 2 x 600 [6] | 30 | 120265 |
| 500/690 V Three-phase | 125 | 125 | ATV71HC11Y | 28 | 0.2 | RL13002 | 100 | — | — | — | 200 [6] | 28 | 31117 |
| | 150 | 150 | ATV71HC13Y | 28 | 0.15 | RL16002 | 100 | — | — | — | 200 [6] | 28 | 31117 |
| | — | 180 | ATV71HC16Y | 35 | 0.11 | RL20002 | 100 | — | — | — | 250 [6] | 35 | 31117 |
| | 200 | 220 / 200 | ATV71HC20Y | 35 | 0.11 | RL20002 | 100 | — | — | — | 300 [6] | 35 | 54450 |
| | 250 | 290 | ATV71HC25Y | 35 | 0.09 | RL25002 | 100 | — | — | — | 400 [6] | 35 | 54450 |
| | 350 | 355 | ATV71HC31Y | 35 | 0.06 | RL40002 | 100 | — | — | — | 500 [6] | 35 | 54450 |
| | 450 | 420 | ATV71HC40Y | 42 | 0.05 | RL50002 | 100 | — | — | — | 2 x 300 [6] | 42 | 120265 |
| | 550 | 543 | ATV71HC50Y | 42 | 0.04 | RL60002 | 100 | — | — | — | 2 x 400 [6] | 42 | 120265 |
| | 700 | 675 | ATV71HC63Y | 42 | 0.029 | RL75002 | 100 | — | — | — | 2 x 500 [6] | 42 | 120265 |

[1] Electrical distribution systems with a higher prospective short circuit current will cause higher input currents in the front end of the drive. Add the inductance referred to in the table at the input of the drive if installing the drive on a system with higher prospective short circuit current. This column shows the maximum prospective short circuit current value the 200/240V and 380/480V Altivar 71 can be installed on without adding impedance to the drive. A 3% (minimum) input line reactor or equivalent inductance is required for these 575/690 Vac Altivar 71s and provides the listed value with the listed fuse protection. Add the inductance refered to in the table. Line reactor references are rated for 600Vac.

[2] The Altivar 71 has a 100k SCC rating on the output of the drive. In addition to providing a rating based on shorting the output of the drive, these short circuit rating have been obtained by shorting components internal to the Altivar 71. These ratings allow proper coordination of short circuit protection. Note: The integral solid state short circuit protection in the drive does not provide branch circuit protection. Branch circuit protection must be provided in accordance with the National Electrical Code and any local codes. The listed line reactor or minimum impedance is required to obtain ratings above the Input Rating.

[3] Ratings apply to an Altivar 71 mounted in a non-ventilated Type 1, 3R, 4(X) or 12 rated enclosure. Minimum enclosure volume allows for the specified SCCR. Your application specific thermal requirements may require a larger enclosure

[4] Use Bussmann fuses. Fuse type can be fast acting or time delay Class J, unless otherwise noted.

[5] Fuse type must be Class T fast acting fuses.

[6] Fuse type must be fast acting Class J fuses unless otherwise noted.

[7] Fuse type must be semi-conductor fuses.

© 2013 Schneider Electric All Rights Reserved

# Short Circuit Protection for Soft Starters

## Altistart™ 22 Soft Starters

**Table 62: Altistart 22 Combination Short Circuit Current Ratings (SCCR)**
Recommended combination ratings with fuse or circuit breaker protective device for ATS22•••S6U.

| Altistart 22 | | | SCCR Ratings [5] | | | | | | | Minimum Enclosure Volume | |
|---|---|---|---|---|---|---|---|---|---|---|---|
| | | | With Circuit Breaker | | | With Fuses [6] | | | | | |
| Power indicated on rating plate (HP) | Reference | NEC Full Load Current (A) | PowerPact [1, 2] (Innverse Time) C1, C2 [4] | PowerPact [1, 2] (Instantaneous-Trip) C1, C2 [4] | SCCR (kA) B [4] | Molded Case Switches | Fuse (A) C1, C2 [4] | SCCR (kA) B [4] | TeSys™ Contactor [8] | No TeSys Contactor [4] (in [3]) | With TeSys Contactor [4] (in [3]) |
| **208 V[A]** | | | | | | | | | | | |
| 3 | ATS22D17S6U | 10.6 | HLL36040 | HLL36030M71 | 100 | HLL36000S15 | 15 | 100 | LC•D18 | 2310 | 4158 |
| 7.5 | ATS22D32S6U | 24.2 | HLL36070 | HLL36050M72 | 100 | HLL36000S15 | 40 | 100 | LC•D32 | 2310 | 4158 |
| 10 | ATS22D47S6U | 30.8 | HLL36100 | HLL36100M73 | 100 | HLL36000S15 | 50 | 100 | LC•D40A | 2310 | 4158 |
| 15 | ATS22D62S6U | 46.2 | HLL36125 | HLL36100M73 | 100 | HLL36000S15 | 80 | 100 | LC•D50A | 2772 | 4620 |
| 20 | ATS22D75S6U | 59.4 | HLL36150 | HLL36150M74 | 100 | HLL36000S15 | 100 | 100 | LC•D80 | 2772 | 4620 |
| 25 | ATS22D88S6U | 74.8 | HLL36150 | HLL36150M74 | 100 | HLL36000S15 | 125 | 100 | LC•D80 | 2772 | 4620 |
| 30 | ATS22C11S6U | 88 | JLL36250 | HLL36150M74 | 100 | HLL36000S15 | 150 | 100 | LC•D115 | 3696 | 6468 |
| 40 | ATS22C14S6U | 114 | JLL36250 | JLL36250M75 | 100 | HLL36000S15 | 200 | 100 | LC•D150 | 3696 | 6468 |
| 50 | ATS22C17S6U | 143 | JLL36250 | JLL36250M75 | 100 | JLL36000S25 | 250 | 100 | LC•F185 | 3696 | 6468 |
| 60 | ATS22C21S6U | 169 | DLL36400 | JLL36250M75 | 100 | JLL36000S25 DLL36600S60 | 250 | 100 | LC•F265 | 11267 | 45000 |
| | | | | DLL36400M36 | | | | | | | |
| | | | LHL36350 | LHL3640031M | 42 | | | | | | |
| 75 | ATS22C25S6U | 211 | LHL36400 | LHL3640032M | 42 | DLL36600S60 | 350 | 100 | LC•F330 | 11267 | 45000 |
| | | | DLL36400 | DLL36400M36 | 100 | | | | | | |
| 100 | ATS22C32S6U | 273 | DLL36600 | DLL36600M42 | 100 | DLL36600S60 | 450 | 100 | LC•F400 | 11267 | 45000 |
| 125 | ATS22C41S6U | 343 | DLL36600 | DLL36600M42 | 100 | DLL36600S60 | 600 | 100 | LC•F500 | 11267 | 45000 |
| 150 | ATS22C48S6U | 396 | MJL36800 | PLL34080M68 | 100 | PLL34000S60 | 700 | 100 | LC•F500 | 10584 | 34272 |
| | | | PLL34080 | | | | | | | | |
| **230 V[A]** | | | | | | | | | | | |
| 5 | ATS22D17S6U | 15.2 | HLL36040 | HLL36030M71 | 100 | HLL36000S15 | 30 | 100 | LC•D25 | 2310 | 4158 |
| 10 | ATS22D32S6U | 28 | HLL36070 | HLL36050M72 | 100 | HLL36000S15 | 45 | 100 | LC•D32 | 2310 | 4158 |
| 15 | ATS22D47S6U | 42 | HLL36100 | HLL36100M73 | 100 | HLL36000S15 | 70 | 100 | LC•D50A | 2310 | 4158 |
| 20 | ATS22D62S6U | 54 | HLL36125 | HLL36100M73 | 100 | HLL36000S15 | 90 | 100 | LC•D65A | 2772 | 4620 |
| 25 | ATS22D75S6U | 68 | HLL36150 | HLL36150M74 | 100 | HLL36000S15 | 110 | 100 | LC•D80 | 2772 | 4620 |
| 30 | ATS22D88S6U | 80 | HLL36150 | HLL36150M74 | 100 | HLL36000S15 | 125 | 100 | LC•D115 | 2772 | 4620 |
| 40 | ATS22C11S6U | 104 | JLL36250 | HLL36150M74 | 100 | HLL36000S15 | 175 | 100 | LC•D150 | 3696 | 6468 |
| 50 | ATS22C14S6U | 130 | JLL36250 | JLL36250M75 | 100 | JLL36000S17 | 225 | 100 | LC•D150 | 3696 | 6468 |
| 60 | ATS22C17S6U | 154 | JLL36250 | JLL36250M75 | 100 | JLL36000S25 | 250 | 100 | LC•F185 | 3696 | 6468 |
| 75 | ATS22C21S6U | 192 | DLL36400 | JLL36250M75 | 100 | JLL36000S25 DLL36600S60 | 300 | 100 | LC•F330 | 11267 | 45000 |
| | | | | DLL36400M36 | | | | | | | |
| | | | LHL36350 | LHL3640031M | 42 | | | | | | |
| 100 | ATS22C25S6U | 248 | LHL36400 | LHL3640032M | 42 | DLL36600S60 | 400 | 100 | LC•F330 | 11267 | 45000 |
| | | | DLL36400 | DLL36400M36 | 100 | | | | | | |
| 125 | ATS22C32S6U | 312 | DLL36600 | DLL36600M42 | 100 | DLL36600S60 | 500 | 100 | LC•F400 | 11267 | 45000 |
| 150 | ATS22C41S6U | 360 | DLL36600 | DLL36600M42 | 100 | DLL36600S60 | 600 | 100 | LC•F500 | 11267 | 45000 |
| 200 | ATS22C59S6U | 480 | MJL36800 | PLL34080M68 | 100 | PLL34000S80 | 800 | 100 | LC•F630 | 10584 | 34272 |
| | | | PLL34080 | | | | | | | | |


© 2013 Schneider Electric All Rights Reserved

**Table 62: Altistart 22 Combination Short Circuit Current Ratings (SCCR)** *(continued)*
Recommended combination ratings with fuse or circuit breaker protective device for ATS22•••S6U.

| Altistart 22 | | | SCCR Ratings [5] | | | | | | | Minimum Enclosure Volume | |
|---|---|---|---|---|---|---|---|---|---|---|---|
| | | | With Circuit Breaker | | | With Fuses [6] | | | | | |
| Power indicated on rating plate (HP) | Reference | NEC Full Load Current (A) | PowerPact [1, 2] (Innverse Time) C1, C2 [4] | PowerPact [1, 2] (Instantaneous-Trip) C1, C2 [4] | SCCR (kA) B [4] | Molded Case Switches | Fuse (A) C1, C2 [4] | SCCR (kA) B [4] | TeSys™ Contactor [8] | No TeSys Contactor [4] (in [3]) | With TeSys Contactor [4] (in [3]) |
| **460 V[A]** | | | | | | | | | | | |
| 10 | ATS22D17S6U | 14 | HLL36040 | HLL36030M71 | 100 | HLL36000S15 | 20 | 100 | LC•D18 | 2310 | 4158 |
| 20 | ATS22D32S6U | 27 | HLL36070 | HLL36050M72 | 100 | HLL36000S15 | 35 | 100 | LC•D32 | 2310 | 4158 |
| 30 | ATS22D47S6U | 40 | HLL36100 | HLL36100M73 | 100 | HLL36000S15 | 70 | 100 | LC•D50A | 2310 | 4158 |
| 40 | ATS22D62S6U | 52 | HLL36125 | HLL36100M73 | 100 | HLL36000S15 | 90 | 100 | LC•D65A | 2772 | 4620 |
| 50 | ATS22D75S6U | 65 | HLL36150 | HLL36150M74 | 100 | HLL36000S15 | 110 | 100 | LC•D80 | 2772 | 4620 |
| 60 | ATS22D88S6U | 77 | HLL36150 | HLL36150M74 | 100 | HLL36000S15 | 125 | 100 | LC•D115 | 2772 | 4620 |
| 75 | ATS22C11S6U | 96 | JLL36250 | HLL36150M74 | 100 | HLL36000S15 | 150 | 100 | LC•D115 | 3696 | 6468 |
| 100 | ATS22C14S6U | 124 | JLL36250 | JLL36250M75 | 100 | JLL36000S17 | 200 | 100 | LC•D150 | 3696 | 6468 |
| 125 | ATS22C17S6U | 156 | JLL36250 | JLL36250M75 | 100 | JLL36000S25 | 250 | 100 | LC•F185 | 3696 | 6468 |
| 150 | ATS22C21S6U | 180 | DLL36400 | JLL36250M75 | 100 | JLL36000S25 DLL36600S60 | 300 | 100 | LC•F265 | 11267 | 45000 |
| | | | LIL36350 | DLL36400M36 | | | | | | | |
| | | | LHL36350 | LHL3640031M | 42 | | | | | | |
| 200 | ATS22C25S6U | 240 | LHL36400 | LHL3640032M | 42 | DLL36600S60 | 400 | 100 | LC•F330 | 11267 | 45000 |
| | | | DLL36400 | DLL36400M36 | 100 | | | | | | |
| | | | LIL36400 | | | | | | | | |
| 250 | ATS22C32S6U | 302 | DLL36600 | DLL36600M42 | 100 | DLL36600S60 | 500 | 100 | LC•F400 | 11267 | 45000 |
| | | | LIL36500 | | | | | | | | |
| 300 | ATS22C41S6U | 361 | DLL36600 | DLL36600M42 | 100 | DLL36600S60 | 600 | 100 | LC•F500 | 11267 | 45000 |
| | | | LIL36600 | | | | | | | | |
| 350 | ATS22C48S6U | 414 | MJL36800 | — | 65 | PLL34000S60 | 700 | 100 | LC•F500 | 10584 | 34272 |
| | | | PLL34080 | PLL34080M68 | 100 | | | | | | |
| 400 | ATS22C59S6U | 477 | MJL36800 | — | 65 | PLL34000S60 | 800 | 100 | LC•F360 | 10584 | 34272 |
| | | | PLL34080 | PLL34080M68 | 100 | | | | | | |
| **575 V[A]** | | | | | | | | | | | |
| 15 | ATS22D17S6U | 17 | HLL36040 | HLL36030M71 | 50 | HLL36000S15 | 25 | 100 | LC•D40A | 2310 | 4158 |
| 25 | ATS22D32S6U | 27 | HLL36070 | HLL36050M72 | 50 | HLL36000S15 | 45 | 100 | LC•D40A | 2310 | 4158 |
| 40 | ATS22D47S6U | 41 | HLL36100 | HLL36100M73 | 50 | HLL36000S15 | 70 | 100 | LC•D50A | 2310 | 4158 |
| 50 | ATS22D62S6U | 52 | HLL36125 | HLL36100M73 | 50 | HLL36000S15 | 90 | 100 | LC•D80 | 2772 | 4620 |
| 60 | ATS22D75S6U | 62 | HLL36150 | HLL36150M74 | 50 | HLL36000S15 | 100 | 100 | LC•D80 | 2772 | 4620 |
| 75 | ATS22D88S6U | 77 | HLL36150 | HLL36150M74 | 50 | HLL36000S15 | 125 | 100 | LC•D115 | 2772 | 4620 |
| 100 | ATS22C11S6U | 99 | JLL36250 | HLL36150M74 | 50 | HLL36000S15 | 150 | 100 | LC•D115 | 3696 | 6468 |
| 125 | ATS22C14S6U | 125 | JLL36250 | JLL36250M75 | 50 | JLL36000S17 | 200 | 100 | LC•D150 | 3696 | 6468 |
| 150 | ATS22C17S6U | 144 | JLL36250 | JLL36250M75 | 50 | JLL36000S25 | 250 | 100 | LC•F185 | 3696 | 6468 |
| 200 | ATS22C21S6U | 192 | DLL36400[3] | JLL36250M75 | 50 | JLL36000S25 DLL36600S60 | 300 | 100 | LC•F330 | 11267 | 45000 |
| | | | LIL36350 | DLL36400M36[3] | | | | | | | |
| | | | LHL36350 | LHL3640031M | 18 | | | | | | |
| 250 | ATS22C25S6U | 242 | DLL36400[3] | DLL36400M36[3] | 50 | DLL36600S60 | 400 | 100 | LC•F330 | 11267 | 45000 |
| | | | LIL36400 | | | | | | | | |
| | | | LHL36400 | LHL3640032M | 18 | | | | | | |
| 300 | ATS22C32S6U | 289 | DLL36600[3] | DLL36600M42[3] | 50 | DLL36600S60 | 500 | 100 | LC•F400 | 11267 | 45000 |
| | | | LIL36500 | | | | | | | | |

© 2013 Schneider Electric All Rights Reserved

**Table 62: Altistart 22 Combination Short Circuit Current Ratings (SCCR)** *(continued)*
Recommended combination ratings with fuse or circuit breaker protective device for ATS22•••S6U.

| Altistart 22 | | | SCCR Ratings [5] | | | | | | | Minimum Enclosure Volume | |
|---|---|---|---|---|---|---|---|---|---|---|---|
| | | | With Circuit Breaker | | | With Fuses [6] | | | | | |
| Power indicated on rating plate (HP) | Reference | NEC Full Load Current (A) | PowerPact [1, 2] (Innverse Time) C1, C2 [4] | PowerPact [1, 2] (Instantaneous-Trip) C1, C2 [4] | SCCR (kA) B [4] | Molded Case Switches | Fuse (A) C1, C2 [4] | SCCR (kA) B [4] | TeSys™ Contactor [8] | No TeSys Contactor [4] (in [3]) | With TeSys Contactor [4] (in [3]) |
| 350 | ATS22C41S6U | 336 | DLL36600[3] | DLL36600M42[3] | 50 | DLL36600S60 | 500 | 100 | LC•F500 | 11267 | 45000 |
| | | | LIL36600 | | | | | | | | |
| 400 | ATS22C48S6U | 382 | MJL36800 | — | 25 | PKL36000S60 | 600 | 100 | LC•F500 | 10584 | 34272 |
| | | | PKL36080 | PKL36080M68 | 50 | | | | | | |
| 500 | ATS22C59S6U | 472 | MJL36800 | — | 25 | PKL36000S80 | 800 | 100 | LC•F630 | 10584 | 34272 |
| | | | PKL36080 | PKL36080M68 | 50 | | | | | | |

[1] Square D PowerPact circuit breakers. Maximum breaker size for SCCR is shown. The third character of the breaker catalog number may be an “L”, an “F”, an “M” or a “P”. The following types of Square D breakers with lower interrupting ratings may be substituted for the breakers shown: HD, HG, HJ, JD, JG, JJ, DG, DJ, MG, PG, PJ, PK.
[2] A smaller ampacity breaker within the same product family may be substituted for the one described.
[3] Short circuit rating of the combination exceeds the rating of the circuit breaker. Combinations including F500 contactor are rated 35 kA at 600 V.
[4] Suitable for use on a circuit capable of delivering not more than ___B___rms symmetrical kiloAmperes, ___A___Volts maximum, when protected by ___C1___ with a maximum rating of ___C2___.
[5] For all models, rating indicates standard use conditions. For heavy duty condition, the user manual must be referred to.
[6] Molded case switches provide the disconnecting means, and fuses provide the short circuit protection. The molded case switch part numbers are only suggestions. Customer may choose to use similar approved disconnecting means.
[7] JLL36000S17 may be replaced by JLL36000S25.
[8] Contactor may be LC1 or LC2 type. The next larger contactor may be substituted for the one shown. Contactors may be used in conjuction with circuit breaker protection and ATS22 soft starter for line and load isolation applications.


© 2013 Schneider Electric All Rights Reserved

## Altistart™ 48 Soft Starters



Altistart 48

Tested combination short-circuit ratings for Altistart 48 soft starters are posted on UL's Combination Motor Controller website under the Square D Soft-Starts link: http://www.ul.com/global/eng/pages/offerings/industries/powerandcontrols/industrialcontrolequipment/shortcircuit/

**Table 63: Altistart 48 Soft Starters [1]**

| Standard Duty Motor (Low Inertia Loads) [2] Maximum Horsepower | | | | | Altistart Soft Starts | |
|---|---|---|---|---|---|---|
| 208 V | 230 V | 400 V | 460 V | 575 V | Rated A | Catalog Number |
| 3 | 5 | 5.5 | 10 | 15 | 17 | ATS48D17Y |
| 5 | 7.5 | 7.5 | 15 | 20 | 22 | ATS48D22Y |
| 7.5 | 10 | 11 | 20 | 25 | 32 | ATS48D32Y |
| 10 | — | 15 | 25 | 30 | 38 | ATS48D38Y |
| — | 15 | 18.5 | 30 | 40 | 47 | ATS48D47Y |
| 15 | 20 | 22 | 40 | 50 | 62 | ATS48D62Y |
| 20 | 25 | 30 | 50 | 60 | 75 | ATS48D75Y |
| 25 | 30 | 37 | 60 | 75 | 88 | ATS48D88Y |
| 30 | 40 | 45 | 75 | 100 | 110 | ATS48C11Y |
| 40 | 50 | 55 | 100 | 125 | 140 | ATS48C14Y |
| 50 | 60 | 75 | 125 | 150 | 170 | ATS48C17Y |
| 60 | 75 | 90 | 150 | 200 | 210 | ATS48C21Y |
| 75 | 100 | 110 | 200 | 250 | 250 | ATS48C25Y |
| 100 | 125 | 132 | 250 | 300 | 320 | ATS48C32Y |
| 125 | 150 | 160 | 300 | 350 | 410 | ATS48C41Y |
| 150 | — | 220 | 350 | 400 | 480 | ATS48C48Y |
| — | 200 | 250 | 400 | 500 | 590 | ATS48C59Y |
| 200 | 250 | 315 | 500 | 600 | 660 | ATS48C66Y |
| 250 | 300 | 355 | 600 | 800 | 790 | ATS48C79Y |
| 350 | 350 | 400 | 800 | 1000 | 1000 | ATS48M10Y |
| 400 | 450 | 500 | 1000 | 1200 | 1200 | ATS48M12Y |

[1] Motor full load amperage (FLA) must not exceed the ampere rating of the soft start.
[2] Low Inertia—Connected motor load inertia equal or less than 10 times motor rotor inertia.
High Inertia—Connected motor load inertia greater than 10 times motor rotor inertia.

Select the Altistart 48 softstart using the nameplate full-load ampere rating of the motor and above. The horsepower ratings are for reference only.

**NOTE:** For severe duty or high inertia loads, derate by 1 hp size.

© 2013 Schneider Electric All Rights Reserved

# Specific Requirements for the Canadian Market

## Installation and Product Standards

The installation standard in Canada is the *Canadian Electrical Code* (CEC). The CEC and the NEC are similar but not 100% equivalent.

The same is true for the CSA standards and corresponding UL standards (see Table 64 below). Some of the major differences are detailed below.

### Certification Process

As in the U.S., nationally recognized testing laboratories (such as: CSA, ETL, TUV, and UL) are able to certify equipment according to these CSA standards. Refer to “Acceptance of Electrical Equipment in the U.S.” on page 4.

### Technical Differences between Canadian and U.S. Standards

Some examples of differences between the Canadian and U.S. standards that currently apply to motor starters are listed below in Table 53. The TeSys™ product line is designed for compliance and capatibility with both the UL and the CSA requirements.

- Type E combination motors starters are recognized in Canada, however, the Type F combination starters are not currently accepted in Canada.
- Type E applications don't require the use of large spacing adapters when used in Canada.
- Group installation is recognized but the rules to define the common branch-circuit protection setting is quite different.
- Industrial control panels must meet CSA C22.2 No. 14
- Elevator equipment appliances must comply with the specific CSA Nr. B44.1 standard.
- Product marking requirements differ slightly.

**Table 64: Comparison of CSA and UL Standards**

| Standard Name | CSA Standard | UL Standard |
|---|---|---|
| Enclosed and Dead-Front Switches | CSA C22.2 No. 4 | UL98 |
| Low-Voltage Fuses: Part 1: General Requirements | CSA C22.2 No. 248 | UL248 |
| Molded-Case Circuit Breakers, Molded-Case Switches, and Circuit-Breaker Enclosures | CSA C22.2 No. 5 | UL489 |
| Industrial Control Equipment | CSA C22.2 No. 14 | UL508 |
| Elevator Equipment | CSA No. B44.1 | Partially UL508 |


© 2013 Schneider Electric All Rights Reserved

# Full-Load Current, Three-Phase Alternating-Current Motors

The following full-load current values conform to NEC requirements. These value are indicative; they vary according to the type of motor, the number of poles, and the manufacturer.

**Table 65: Induction-Type Squirrel Cage and Wound Rotor (A)**

| Horsepower (hp) | 115 V | 200 V | 208 V | 230 V | 460 V | 575 V |
|---|---|---|---|---|---|---|
| 0.5 | 4.4 | 2.5 | 2.4 | 2.2 | 1.1 | 0.9 |
| 0.75 | 6.4 | 3.7 | 3.5 | 3.2 | 1.6 | 1.3 |
| 1 | 8.4 | 4.9 | 4.6 | 4.2 | 2.1 | 1.7 |
| 1.5 | 12.0 | 6.9 | 6.6 | 6.0 | 3.0 | 2.4 |
| 2 | 13.6 | 7.8 | 7.5 | 6.8 | 3.4 | 2.7 |
| 3 | — | 11.0 | 10.6 | 9.6 | 4.8 | 3.9 |
| 5 | — | 17.5 | 16.7 | 15.2 | 7.6 | 6.1 |
| 7.5 | — | 25.3 | 24.2 | 22 | 11 | 9 |
| 10 | — | 32.2 | 30.8 | 28 | 14 | 11 |
| 15 | — | 48.3 | 46.2 | 42 | 21 | 17 |
| 20 | — | 62.1 | 59.4 | 54 | 27 | 22 |
| 25 | — | 78.2 | 74.8 | 68 | 34 | 27 |
| 30 | — | 92 | 88 | 80 | 40 | 32 |
| 40 | — | 120 | 114 | 104 | 52 | 41 |
| 50 | — | 150 | 143 | 130 | 65 | 52 |
| 60 | — | 177 | 169 | 154 | 77 | 62 |
| 75 | — | 221 | 211 | 192 | 96 | 77 |
| 100 | — | 285 | 273 | 248 | 124 | 99 |
| 125 | — | 359 | 343 | 312 | 156 | 125 |
| 150 | — | 414 | 396 | 360 | 180 | 144 |
| 200 | — | 552 | 528 | 480 | 240 | 192 |
| 250 | — | — | — | — | 302 | 242 |
| 300 | — | — | — | — | 361 | 289 |
| 350 | — | — | — | — | 414 | 336 |
| 400 | — | — | — | — | 477 | 382 |
| 450 | — | — | — | — | 515 | 412 |
| 500 | — | — | — | — | 590 | 472 |

© 2013 Schneider Electric All Rights Reserved

**Motor Control Solutions**
**Data Bulletin**

Electrical equipment should be installed, operated, serviced, and maintained only by qualified personnel. No responsibility is assumed by Schneider Electric for any consequences arising out of the use of this material.

Square D™ and Schneider Electric™ are trademarks or registered trademarks of Schneider Electric. Other trademarks used herein are the property of their respective owners.

8536DB0901 Rev. 11/11, 1/2013
Replaces 8536DB0901 11/2009
© 2013 Schneider Electric All Rights Reserved

**Schneider Electric**
8001 Knightdale Blvd.
Knightdale, NC 27545
1-888-778-2733
www.schneider-electric.us