Safety detection solutions
Safety mats

Applications	**Packaging, conveyor systems, materials handling, warehousing, storage, etc.**	
Function	**Zone protection keeping machine operators away from dangerous movements.**	
	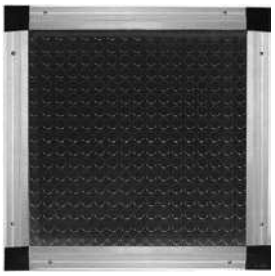	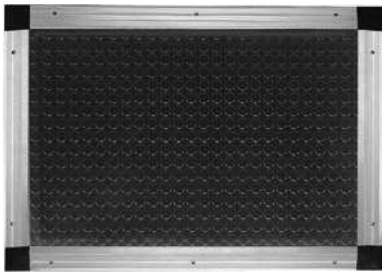
Conforming to standards	EN 1760-1, EN 60947-5-1, EN 60204-1, UL 508, CSA C22-2 No. 14	
Product certifications	Category 3 safety conforming to EN 954-1, BG with safety modules **XPS A K** and **XPS MP/MC**, cULus	
Degree of protection	IP 67	
Dimensions (mm)	500 x 500	500 x 750
Response time	≤ 40 ms with **XPS AK,** ≤ 30 ms with **XPS MP**/MC	
Type of outputs	2 cables; 2 conductors on male/female connectors diameter 8	
Sensitivity	Single mat: > 20 kg Group of mats: > 35 kg	
Maximum supply voltage	⎓ 30 V	
Unit type	**XY2 TP1**	**XY2 TP2**
Page	3/89	

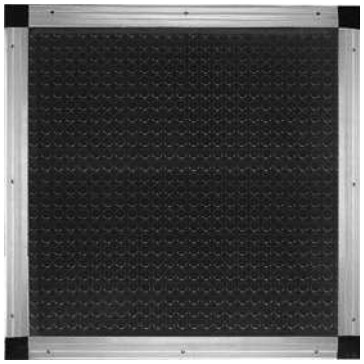

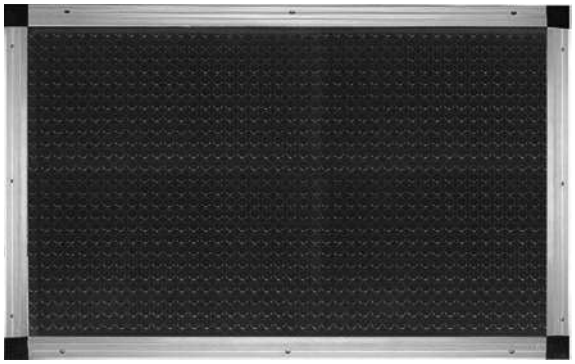

Category 3 safety conforming to EN 954-1, BG with safety modules **XPS AK** and **XPS MP/MC**, cULus	
IP 67	
750 x 750	750 x 1250
≤ 40 ms with **XPS AK,** ≤ 30 ms with **XPS MP/MC**	
2 cables; 2 conductors on male/female connectors diameter 8	
Single mat: > 20 kg Group of mats: > 35 kg	
⎓ 30 V	
XY2 TP3	**XY2 TP4**
3/89	

Safety detection solutions
Preventa safety mats
Type XY2 TP

Presentation

Zone protection

The equipment comprises category 3 safety mats, installed in front of or around potentially dangerous machines and/or robots. They provide a protection zone between machine operators and any dangerous movements.
They form protection zones that are mainly designed to ensure the safety of personnel.
They thus supplement safety devices by enabling free access for the loading/unloading of machines.
The safety mats are used either in conjunction with safety modules or combined with other zone protection systems. They are particularly suited for use in polluted environments (dust, oil, etc.).
"Protect Area Design" configuration software *(1)* enables design and setting-up of the installation.

Applications

Safety mats are mainly used in:
- assembly and packaging lines,
- conveying and handling lines,
- warehousing and storage systems.

Description

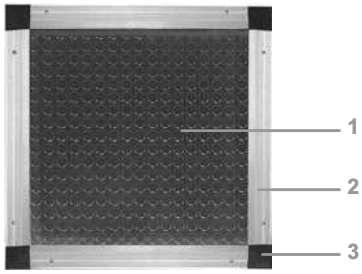

- A safety mat comprises:
  - a sensing zone **1**,
  - a border comprising aluminium rails **2**
  - and rail corners which secure the assembly **3**.
- Safety mats can be butt mounted in order to define the safety zone.
- Mats are electrically interconnectable, without loss of sensitivity.

Operating principle

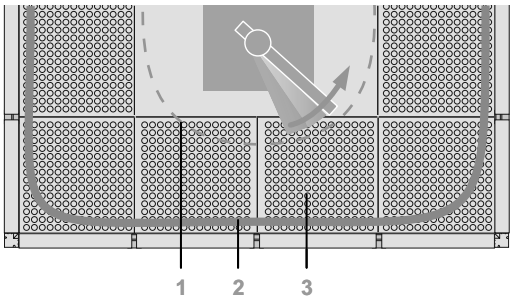

Safety modules type XPS AK and safety controllers type XPS MP/MC used in conjunction with safety mats XY2 TP establish a category 3 safety device conforming to standard EN 954-1/ISO 13849-1.

■ The hazardous zone **1** is defined by the dangerous movement of a machine.

■ The safety zone **2**, defined in accordance with standard EN 999/ISO 13855, comprises one or several butt mounted safety mats **3** (10 maximum for XPS AK and 30 maximum for XPS MP/MC).

■ Safety mats are used for detecting persons stepping onto the mat or falling objects in accordance with standard EN 1760-1/ISO 13856;
- weight > 20 kg for a single mat,
- weight > 35 kg for a group of mats.

■ Any detection of movement on the safety mat immediately instigates the stopping of the dangerous movement of the machine to be made safe. The resetting of the machine can be performed manually or automatically, depending on the wiring configuration of the safety module within the process.

■ The safety mats can also be used for detection applications not related to safety.

Directives and standards

■ The safety mats conform to the following standards:
- EN/ISO 12100,
- EN 1050/ISO 14121,
- EN/IEC 60947-5-1,
- EN 954-1/ISO 13849-1,
- EN 1760-1/ISO 13856-1,
- EN/IEC 60204-1,
- UL 508,
- CSA C22-2 n° 14.

■ The safety mats are c UL us and BG (when used in conjunction with safety modules XPS AK and safety controllers type XPS MP/MC) certified and approved.

(1) See pages 3/92 to 3/94.

Safety detection solutions
Preventa safety mats
Type XY2 TP

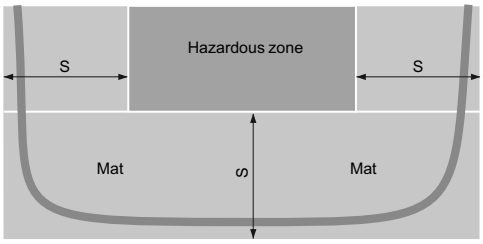

S = minimum distance between the hazardous zone and the detection limit.
Safety zone

Installation precautions

Standard EN 999/ISO 13855 defines:
- the minimum distance between the hazardous zone and the detection limit of the device furthest away from the hazardous zone, see calculation below,
- the body approach speed.

Standard EN 1760-1/ISO 13856-1 states the following requirements:
- surface layout drawing,
- surface preparation,
- handling and connection,
- starting and testing.

Safety rules

Detection of failures liable to compromise safety and stopping of the machine
The design of the machine and its control system must be to the same level of safety as that of the safety mat system in order to ensure the immediate stopping of the machines dangerous movement as soon as the hazardous zone is entered.
It must not be possible to enter the protected zone without tripping the protection system. Therefore, safety mats must be installed in such a way that they cannot be avoided.
The machine can only be restarted if no danger exists and no personnel are present in the hazardous zone.

Calculation of the minimum safety distance according to the application

Standard EN 999/ISO 13855 states the following calculation of distance:
- Safety mat installed on a flat surface:
  S = (1600 mm/s x (t1 + t2)) + 1200 mm.
- Safety mat installed on a step:
  S = (1600 mm x (t1 + t2)) + (1200 mm - 0.4H).

S = minimum distance in mm, in a horizontal plane, between the hazardous zone and the detection limit of the device furthest away from the hazardous zone.
T = overall response time = t1 + t2.
t1 = maximum time in seconds between activation of the detection function (safety mat) and the changeover of the output signal switching devices to the inhibited state (e.g. safety module type XPS AK).
t2 = response time of machine in seconds. Time required to stop the dangerous movement of the machine.
H = distance above reference plane (e.g. height of step in mm).

Note: in all cases S > 750 mm.

Example of an application processed using "Protect Area Design" software *(1)*
- Unintentional access to the hazardous zone of a machine must be detected by a safety device.
- The estimated risk combined with a very dusty environment indicates that a floor mounted sensing device (safety mat) would be appropriate.
- The stopping time of the machine is 300 ms and the response time of the sensing device is ≤ 40 ms.

Calculation formula: S = (1600 mm/s x T) + (1200 mm - 0.4 x H) = (1600 x 0.34) + (1200 - 0) = 1744 mm.

(1) See pages 3/92 to 3/94.

Safety detection solutions
Preventa safety mats
Type XY2 TP

Environment			
Products designed for max. use in safety related parts of control systems (conforming to EN 954-1)			Category 3 max.
Conformity to standards	Products		EN/IEC 60947-5-1, EN 1760-1/ISO 13856-1, UL 508, CSA C22-2 n° 14
	Machine assemblies		IEC/EN 60204-1, EN 999/ISO 13855, EN/ISO 12100
Product certifications			BG with safety modules XPS AK and XPS MP/MC, cULus
Ambient air temperature	For operation	**°C**	+ 5…+ 55
	For storage	**°C**	- 20…+ 70
Sensitivity	Single mat	**kg**	> 20
	Group of mats	**kg**	> 35
Electric shock protection			Class III conforming to EN/IEC 61140
Degree of protection			IP 67 conforming to IEC 60529
Type of covering			NBR, pelleted appearance
Materials of mounting accessories	Rail connectors and corners		Polyacetal
Electrical characteristics			
Rated operational characteristics			⎓ 30 V/100 mA
Contact	Material		Aluminium
	Type		N/O (1-3)
	Resistance	Ω	≤ 5 (closed state)
		MΩ	10 (open state)
	Response time	**ms**	20
Mechanical durability	In millions of operating cycles		> 1
Connection			2 PUR flying leads (length 100 mm, 2 x 0.5 mm² conductors) with Ø 8 male/female, IP 67 connector
Mechanical characteristics			
Maximum permissible load on mat		**N/cm²**	2000
Compression			5 tonnes max.
Rated impulse withstand voltage			U imp = 6 kV conforming to EN/IEC 60947-1, EN/IEC 60664
Maximum number of mats per safety module			10
Tensile strength		**N/mm²**	7
Resistance to friction		**mg**	120
Shore A hardness			70 ± 5
Amount of stretch to tear		**%**	250
Behaviour in fire (DIN 4102)			B2
Resistance to incandescent materials			Resistant
Chemical resistance *(1)*	Acetone		Resistant
	Alkaline washing water		
	Ammonia		
	Caustic potassium solution		
	Citric acid		
	Greases		
	Hydrochloric acid, 10% solution		
	Methylated spirits		
	Oil, ASTM N° 1/2/3		
	Petrol		
	Resistance to ultraviolet rays		
	Water		
	Acetic acid		Limited resistance
	Brake fluid		
	Cutting compound		
	Methyl alcohol		
	Nitrated solution		
	Sodium hydroxide		
	Stamping oil		

(1) The resistance of the covering to the products listed is valid for an ambient temperature of 23 °C, provided there is no surface deterioration.

Safety detection solutions
Preventa safety mats
Type XY2 TP

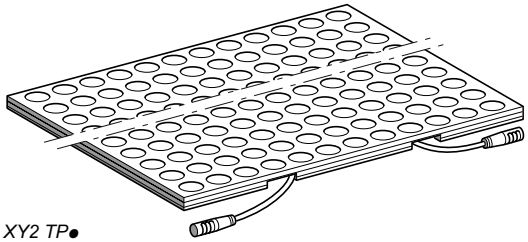

XY2 TP●

Safety mats

Dimensions (mm)	Reference	Weight kg
500 x 500 x 11	**XY2 TP1**	4.400
500 x 750 x 11	**XY2 TP2**	6.600
750 x 750 x 11	**XY2 TP3**	9.800
750 x 1250 x 11	**XY2 TP4**	16.400

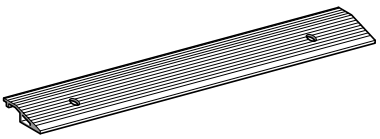

XY2 TZ●0

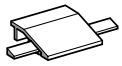

XY2 TZ1



XY2 TZ2

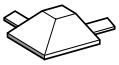

XY2 TZ4

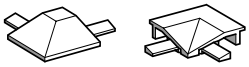

XY2 TZ5

Accessories for grouping mats

Description	Length (mm)	Sold in lots of	Unit reference	Weight kg
Rails	194	2	**XY2 TZ10**	0.450
	394	2	**XY2 TZ20**	0.500
	444	2	**XY2 TZ30**	0.710
	494	2	**XY2 TZ40**	0.770
	644	2	**XY2 TZ50**	1.000
	694	2	**XY2 TZ60**	1.080
	744	2	**XY2 TZ70**	1.100
	1194	2	**XY2 TZ80**	1.860
	1244	2	**XY2 TZ90**	2.000
Rail connectors *(1)*	56	2	**XY2 TZ1**	0.150
	6	2	**XY2 TZ2**	0.050
External corner *(1)*	–	4	**XY2 TZ4**	0.100
Kit comprising: 1 internal corner + 1 external corner XY2 TZ4 *(1)*	–	1	**XY2 TZ5**	0.050

(1) With 2 knock-out cable entries.

Reference of Protect Area Design software

Description	Compatibility	Language	Reference	Weight kg
Protect Area Design software configurator, supplied on CD-ROM	Windows 98 / NT / 2000 and XP	French/ English	**SIS CD104200**	0.085

Safety detection solutions

Preventa safety mats

Jumper cables Ø 8 mm-M8 and M8-M8

Characteristics

Type of connection		Clip-in male and female connectors (without locking)
Degree of protection		IP 68 (with connectors correctly clipped together)
Ambient air temperature	**°C**	- 25…+ 90
Conductor c.s.a.	**mm²**	2 x 0.5
Cable diameter	**mm**	4.5
Nominal voltage	**V**	⎓ and ∿ 60
Nominal current	**A**	4
Insulation resistance	Ω	> 10^8
Contact resistance	**m**Ω	≤ 15

References

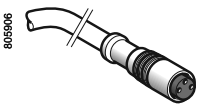

XZC RTPA●

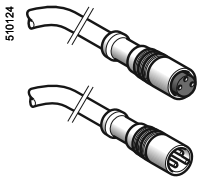

XZ CPTP0●●●●●

Description	Number of conductors	Length of PUR cable (m)	Reference	Weight kg
Male-female jumper cable, M8, straight *(1)* For connection between mats in rail or to another cable	2	0.33	**XZC RTPA1**	0.005
		0.54	**XZC RTPA2**	0.005
		0.79	**XZC RTPA3**	0.010
		1.08	**XZC RTPA4**	0.010
		1.29	**XZC RTPA5**	0.020
		1.33	**XZC RTPA6**	0.020
		1.58	**XZC RTPA7**	0.020
		2.58	**XZC RTPA8**	0.060
1 pre-wired female connector + 1 pre-wired male connector, Ø 8 mm straight For connection to the safety module	2	2	**XZC PTP0104L2**	0.050
		5	**XZC PTP0205L5**	0.110
		10	**XZC PTP0306L10**	0.215

(1) The maximum number of jumper cables that can go through a rail is 4.

Connections

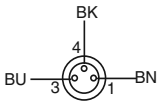

BU: (-) blue
BN: (+) brown
BK: (Output) black

Safety detection solutions
Preventa safety mats
Type XY2 TP

Dimensions

Pressure sensitive safety mats

XY2 TP●

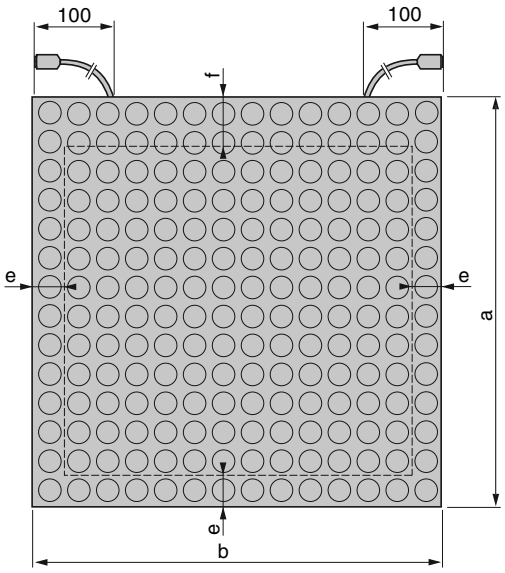

XY2	a	b	Thickness
TP1	500	500	11
TP2	750	500	11
TP3	750	750	11
TP4	1250	750	11
e: dead zone = 10 mm			
f: dead zone = 25 mm			

Aluminium rails

XY2 TZ●0

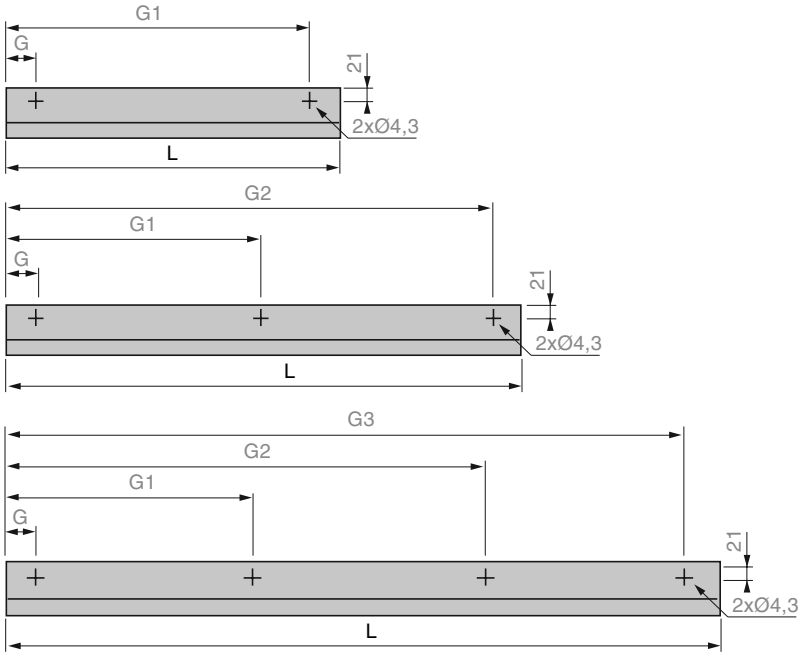

XY2	L	G	G1	G2	G3
TZ10	194	50	144	–	–
TZ20	394	50	344	–	–
TZ30	444	50	394	–	–
TZ40	494	50	444	–	–
TZ50	644	50	322	594	–
TZ60	694	50	347	644	–
TZ70	744	50	372	694	–
TZ80	1194	50	413	776	1144
TZ90	1244	50	431	812	1194

Rail connectors

XY2 TZ1

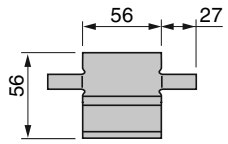

XY2 TZ2

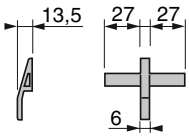

External corner

XY2 TZ4

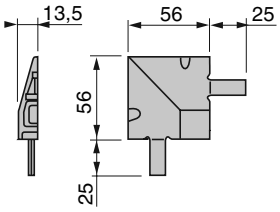

Internal corner

Sold in kit XY2 TZ5

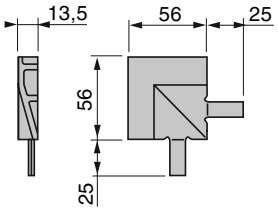

Connections

Wiring example to category 3, with an XPS AK module

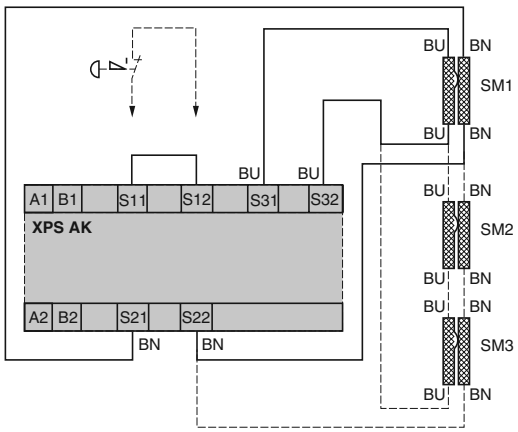

Safety detection solutions
Protect Area Design
Software configurator for safety installations incorporating light curtains or safety mats

Presentation

Preparation and standards

Before using the configurator, it is necessary to perform the following 2 procedures: risk assessment in accordance with EN 1050/ISO 14121 and risk reduction in accordance with EN/ISO 12100-1, in order to decide the contribution of the risk from the light curtain or safety mat and to select the appropriate control system category.

The Protect Area Design software

Protect Area Design software is a configurator that enables selection of the zone protection device (sensing mats, light curtains) required for safety applications.
This software enables the user, via a graphic interface, to create, test or modify a safe working area in the vicinity of a potentially dangerous machine.
Having established the predefined fields (desired control system category, dimensions of the machine, etc.), the Protect Area Design software calculates the safety distance in relation to the reaction time of the machine, the light curtain and the approach direction to the hazardous zone. It then displays a recommended safety protection solution and creates the list of products (references, quantities and accessories to be used).
Protect Area Design software is user-friendly and compatible with Windows 98, NT, 2000 and XP.

Main functions of the software

The software enables creation of an application using the procedures stated below or selection from applications previously established:
- assisted procedure for light curtains,
- unassisted or assisted procedure for sensing mats.

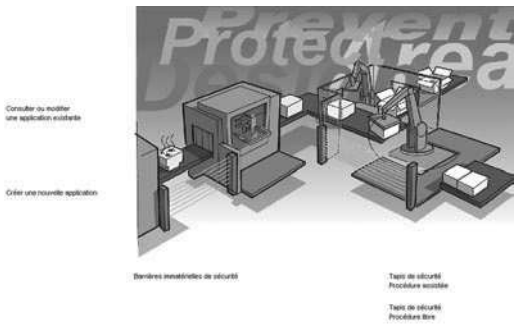

Home screen

Reference of Protect Area Design software

Description	Compatibility	Language	Reference	Weight kg
Protect Area Design software configurator supplied on CD-ROM	Windows 98 / NT / 2000 and XP	French/English	**SIS CD104200**	0.085

Safety detection solutions

Protect Area Design

Software configurator for safety installations incorporating light curtains or safety mats

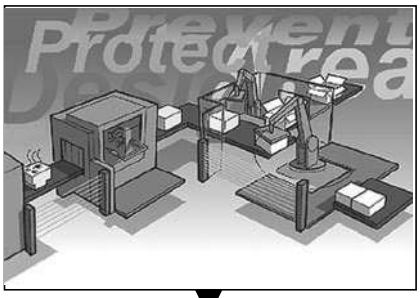

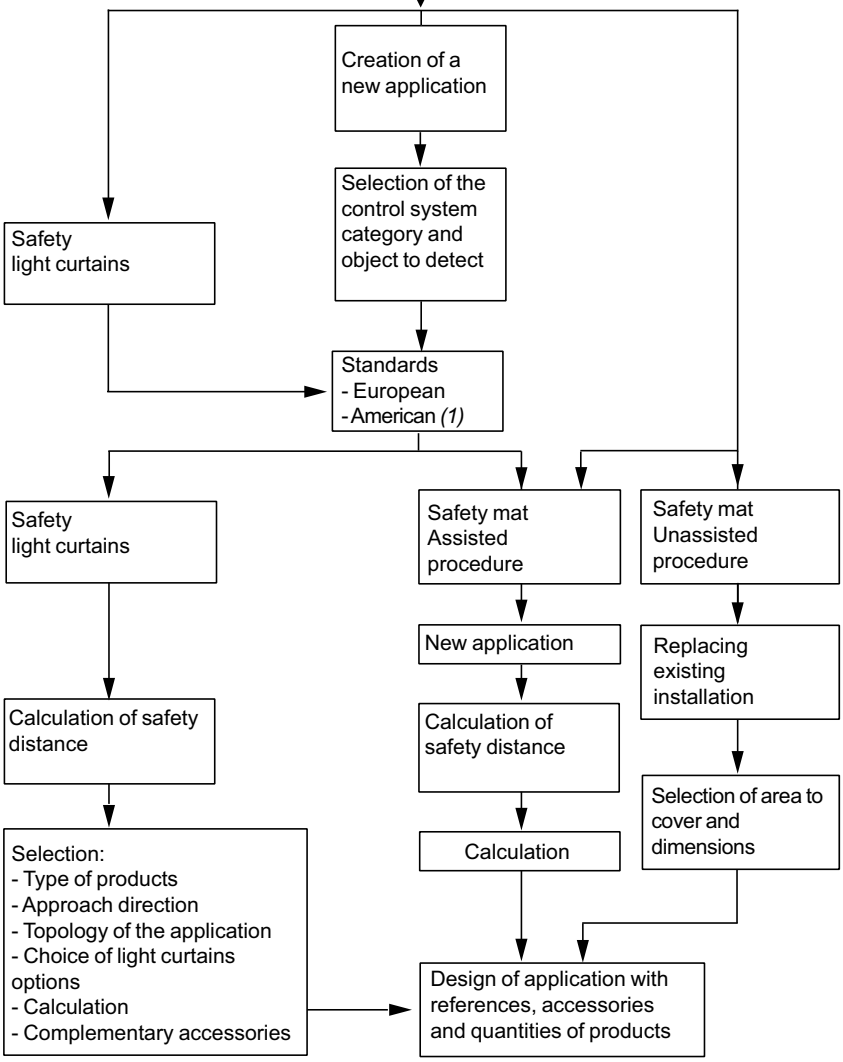

(1) Light curtains only.

Safety detection solutions

Protect Area Design

Software configurator for safety installations incorporating light curtains or safety mats



Control system category and its sensitivity



Type of approach into the hazardous zone



Description of the installation and calculation of safety distance

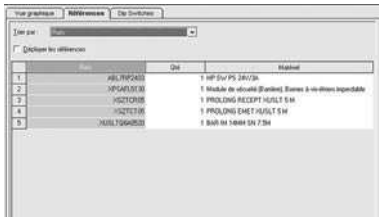

List of products

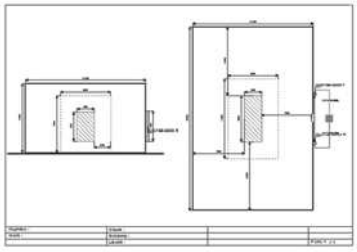

Graphical representation of the light curtain configuration

Configuration of light curtains

The Protect Area Design software enables selection of the type of application depending on the approach movement (at right-angles, parallel to, at an angle) into the hazardous zone.

■ For configuration in “Assisted procedure” mode the software enables access to the following menus:

□ selection of the control system category and object to detect,

□ description of the machine and its reaction time,

□ selection of a type of application depending on the approach direction into the hazardous zone,

□ calculation and selection of the following parameters:

- detection capability: finger, hand or whole body
- type of output: alarm/auxiliary,
- protection: Lexan cover *(1)* or IP 67 tube *(1)*,
- monitoring modules options: 2 to 4 light curtains,
- muting modules option: 1 light curtain and 1 or 2 light curtains,
- light curtain options: EDM *(2)*, MTS *(1)*, Blanking *(2)*, Floating blanking *(2)* (1 or 2 light beams).

On-screen results

Following calculation of the safety distance, the software displays the following results:

■ component selection (description of products),

■ graphical representation of the configuration,

■ list of selected components (references and quantities),

■ configuration of products.

(1) See page 3/104.

(2) For further information, refer to pages 3/98 to 3/103.

Safety detection solutions
Protect Area Design
Software configurator for safety installations incorporating light curtains or safety mats

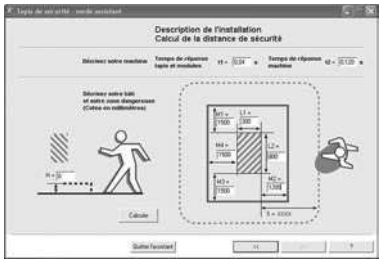

Description of the installation

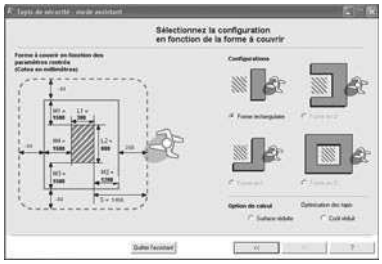

Configuration according to the zone to cover

Configuration of safety mats

The Protect Area Design software enables determination of the shape to be covered and optimisation of the use of mats using proposed solutions such as “Coverage of the zone to be protected” or “Optimised coverage of the zone to be protected”.

■ For configuration in “Assisted procedure” mode the software enables access to the following menus:

□ description of the installation: description of the machine, reaction time,

□ description of the structure and access to the hazardous zone,

□ selection of configuration according to the zone to be covered,

□ calculation.

■ For configuration in “Unassisted procedure” mode the software enables access to the following menus:

□ replacement of an existing installation,

□ selection of surface to cover and measurements.

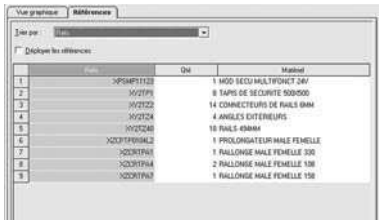

List of products

On-screen results

Following calculation of the safety distance, the software displays the following results:

■ component selection (description of products),

■ graphical representation of the configuration,

■ list of selected components (references and quantities).

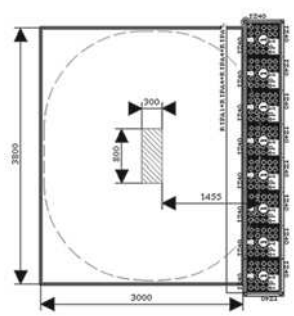

Graphical representation of the sensing mat configuration

Safety dialogue solutions
Emergency stop trip wire switches, type XY2 C

Environment

Conformity to standards	Products	**XY2 CH**, **XY2 CE**: EN/IEC 60947-5-1, EN/ISO 13850:2006, UL 508 and CSA C 22-2 n° 14 (with suffix H7) **XY2 CB**: EN/IEC 60947-5-1, EN/ISO 13850:2006, CSA C 22-2 n° 14 (with suffix H2)
	Machine assemblies	**XY2 CH**, **XY2 CE**, **XY2 CB**: EN/IEC 60204-1, Machinery directive: 98/37/EC and 91/368/EEC, Work equipment directive: 89/655/EEC
Product certifications		**XY2 CH**: UL-CSA (with suffix H7), CCC *(1)* **XY2 CE**: UL-CSA A300-Q300 (with suffix H7), CCC *(1)* **XY2 CB**: CSA A600-Q600 (with suffix H2)
Protective treatment	Standard version	"TC"
	Special version	"TH"
Ambient air temperature	For operation	- 25…+ 70 °C
	For storage	- 40…+ 70 °C
Vibration resistance		**XY2 CH**: 10 gn (10…150 Hz) **XY2 CE**: 10 gn (10…300 Hz) conforming to EN/IEC 60068-2-6
Shock resistance		**XY2 CH, XY2 CE**: 50 gn (duration 11 ms) conforming to EN/IEC 60068-2-27
Electric shock protection		Class I conforming to EN/IEC 61140 and NF C 20-030
Degree of protection		**XY2 CH, XY2 CE**: IP 65 **XY2 CB**: enclosure IP 22, contact housing IP 65, conforming to EN/IEC 60529 and NF C 20-010
Mechanical life		**XY2 CH**, **XY2 CE** (Emergency stop), **XY2 CB**: 10 000 operating cycles
Length of protected zone (trip wire)		**XY2 CH**: ⩽ 15 metres, **XY2 CE**: ⩽ 50 metres, **XY2 CB**: ⩽ 100 metres and ⩽ 2 x 100 metres
Distance between cable supports		5 m
Cable entries		See dimensions, page 4/13.

Contact block characteristics

Rated operational characteristics	**XY2 CH**, **XY2 CE**: AC-15: A300 or Ue = 240 V, Ie = 3 A DC-13: Q600 or Ue = 250 V, Ie = 0.27 A conforming to EN/IEC 60947-5-1 Appendix A **XY2 CB**: AC-15: A600 or Ue = 600 V, Ie = 1.2 A DC-13: Q600 or Ue = 600 V, Ie = 0.1 A conforming to EN/IEC 60947-5-1 Appendix A
Nominal thermal current	10 A
Rated insulation voltage	**XY2 CH**, **XY2 CE**: Ui = 400 V degree of pollution 3 conforming to EN/IEC 60947-1, Ui = 300 V conforming to UL 508, CSA C22-2 n° 14 **XY2 CB**: Ui = 500 V degree of pollution 3 conforming to EN/IEC 60947-1, Ui = 600 V to CSA C22-2 n° 14
Rated impulse withstand voltage	**XY2 CH**, **XY2 CE**: Uimp = 4 kV, **XY2 CB**: Uimp = 6 kV conforming to EN/IEC 60947-1
Positive operation	N/C contact with positive opening operation conforming to EN/IEC 60947-5-1 Section 3
Contact operation	**XY2 CH**, **XY2 CE** (Emergency stop), **XY2 CB**: N/C + N/C or N/C + N/O slow break
Resistance across terminals	⩽ 25 mΩ conforming to NF C 93-050 method A or EN/IEC 60255-7 category 3
Terminal referencing	Conforming to CENELEC EN 50013
Short-circuit protection	**XY2 CH, XY2 CE**, **XY2 CB**: 10 A cartridge fuse type gG (gI) conforming to EN/IEC 60269

Rated operational power (Electrical durability)

Operating rate: 3600 operating cycles/hour
Load factor: 0.5

XY2 CH, XY2 CE
Conforming to EN/IEC 60947-5-1 Appendix C
Utilisation categories AC-15 and DC-13

a.c. supply ∼ 50…60 Hz

Inductive circuit

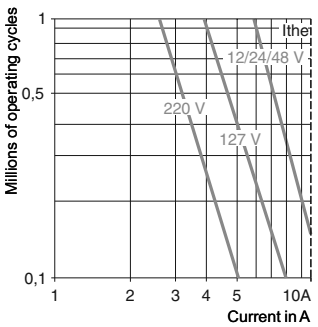

Voltage	V	**24**	**48**	**120**
	W	15	23	30

XY2 CB
Conforming to EN/IEC 60947-5-1 Appendix C
Utilisation categories AC-15 and DC-13

a.c. supply ∼ 50…60 Hz

Power broken in VA *(1)*

Inductive circuit

Voltage	V	**24**	**48**	**127**	**220**
	VA	250	250	500	500

d.c. supply ⎓

Power broken in W *(1)*

Inductive circuit

Voltage	V	**24**	**48**	**120**
	W	50	100	100

(1) For 1 million operating cycles.

Contact connection	Screw clamp terminals Clamping capacity: min. 1 x 0.5 mm², max. 2 x 1.5 mm² Minimum tightening torque: 0.8 N.m Maximum tightening torque: 1.2 N.m

(1) Only products XY2 CH without pilot light and XY2 CE without pilot light or with 24, 48 or 130 V pilot light are CCC and UL-CSA approved.

General: page 4/4 References: page 4/7 Dimensions: page 4/13

Safety dialogue solutions
Emergency stop trip wire switches, type XY2 C


8033015

XY2 CH13250

Latching Emergency stops
(integrated turnbuckle, cable and end spring to be ordered separately) *(1)*

Without pilot light

Length of cable	Colour of enclosure	Reset		Type of contact			Cable anchor point	Reference	Weight kg
⩽ 15 m	Grey RAL 7032	By booted pushbutton	–	1	1	N/C + N/O slow break	RH side or LH side	**XY2 CH13250** *(3)*	0.865
		By mushroom head pushbutton	–	1	1			**XY2 CH13350** *(3)*	0.900
		By key operated pushbutton (key n° 421) *(2)*	–	1	1			**XY2 CH13450** *(3)*	0.910
		By flush pushbutton	–	2	–	N/C + N/C slow break	RH side or LH side	**XY2 CH13170** *(3)*	0.865
		By booted pushbutton	–	2	–			**XY2 CH13270** *(3)*	0.865
		By mushroom head pushbutton	–	2	–			**XY2 CH13370** *(3)*	0.865
		By key operated pushbutton (key n° 421) *(2)*	–	2	–			**XY2 CH13470** *(3)*	0.910
	Grey RAL 3000 *(4)*	By booted pushbutton	–	1	1	N/C + N/O slow break	RH side or LH side	**XY2 CH13258** *(3)*	0.865
				2	–	N/C + N/C slow break	RH side or LH side	**XY2 CH13278** *(3)*	0.865
With pilot light (direct supply)									
⩽ 15 m	Grey RAL 7032	By booted pushbutton	24 V	1	1	N/C + N/O slow break	RH side or LH side	**XY2 CH13253**	0.900
				2	–	N/C + N/C slow break	RH side or LH side	**XY2 CH13273**	0.900


807506

XY2 CE1A250

Latching Emergency stops
(turnbuckle, cable and end spring to be ordered separately) *(1)*

Without pilot light

⩽ 50 m *(5)*	Grey RAL 7032	By booted pushbutton	–	1	1	N/C + N/O slow break	RH side	**XY2 CE1A250** *(6)*	1.450
							LH side	**XY2 CE2A250** *(6)*	1.450
				2	–	N/C + N/C slow break	RH side	**XY2 CE1A270** *(6)*	1.450
							LH side	**XY2 CE2A270** *(6)*	1.450
		By key operated pushbutton (key n° 421) *(2)*	–	1	1	N/C + N/O slow break	RH side	**XY2 CE1A450** *(6)*	1.465
							LH side	**XY2 CE2A450** *(6)*	1.465
				2	–	N/C + N/C slow break	RH side	**XY2 CE1A470** *(6)*	1.470
							LH side	**XY2 CE2A470** *(6)*	1.470
With pilot light (direct supply)									
⩽ 50 m *(5)*	Grey RAL 7032	By booted pushbutton	24 V, 48 V, 130 V (bulb not included)	2	2	N/C + N/O slow break	RH side	**XY2 CE1A296**	1.470
							LH side	**XY2 CE2A296**	1.470
			230 V (bulb not included)	2	2	N/C + N/O slow break	RH side	**XY2 CE1A297**	1.470
							LH side	**XY2 CE2A297**	1.470

Other versions

See order forms on pages 4/8 and 4/9.
XY2 CE with reset by Ø 40 mm mushroom head pushbutton or with integral cable tensioner and support.
Please consult your Regional Sales Office.

(1) See separate components, page 4/11.
(2) Ø 30 spring return, mushroom head, key operated pushbutton. Locking and key withdrawal in the rest (unactuated) position.
*(3) For ISO M20 threaded cable entry version, add H29 to the end of the reference selected. Example: **XY2 CH13250** becomes **XY2 CH13250H29**.*
(4) Only available on Emergency stop enclosures type XY2 CH1325● and XY2 CH1327● for standard, H29 and TK versions.
(5) Available with window for viewing cable tension indicator, for adjustment whilst the cover is closed (see versions XY2 CE●D●●● and XY2 CE●E●●● on the order form, page 4/10.
*(6) ATEX version available (products for explosive atmospheres). To order, add **EX** to the end of the reference. Example: **XY2 CE1A250** becomes **XY2 CE1A250EX**.*

Safety dialogue solutions
Emergency stop trip wire switches, type XY2 C



XY2 CB30

Latching Emergency stops
(end spring included, turnbuckle and cable to be ordered separately) *(1)*

Without pilot light

Length of cable	Colour of enclosure	Reset	Type of contact			Cable anchor point	Reference	Weight kg
≤ 100 m	Blue	From inside enclosure	1	1	N/C + N/O slow break	LH side	**XY2 CB10**	18.750
						RH side	**XY2 CB20**	18.750
			2	–	N/C + N/C slow break	LH side	**XY2 CB104**	18.750
						RH side	**XY2 CB204**	18.750
≤ 2 x 100 m	Blue	From inside enclosure	1	1	N/C + N/O slow break	RH and LH sides	**XY2 CB30**	29.250
			2	–	N/C + N/C slow break	RH and LH sides	**XY2 CB304**	29.250

With pilot light

Length of cable	Colour of enclosure	Reset	Supply voltage	Type of contact			Cable anchor point	Reference	Weight kg
■ Direct supply									
≤ 100 m	Blue	From inside enclosure	24 V	1	1	N/C + N/O slow break	LH side	**XY2 CB11**	19.550
							RH side	**XY2 CB21**	19.550
			48 V	1	1	N/C + N/O slow break	LH side	**XY2 CB12**	19.550
							RH side	**XY2 CB22**	19.550
≤ 2 x 100 m	Blue	From inside enclosure	24 V	1	1	N/C + N/O slow break	RH and LH sides	**XY2 CB31**	25.600
			48 V	1	1	N/C + N/O slow break	RH and LH sides	**XY2 CB32**	30.050
■ Supply via integral transformer *(2)*									
≤ 100 m	Blue	From inside enclosure	127 V/6 V	1	1	N/C + **N/O** slow break	LH side	**XY2 CB13**	15.600
							RH side	**XY2 CB23**	15.600
			220 V/6 V	1	1	N/C + N/O slow break	LH side	**XY2 CB14**	15.600
							RH side	**XY2 CB24**	15.600
≤ 2 x 100 m	Blue	From inside enclosure	127 V/6 V	1	1	N/C + N/O slow break	RH and LH sides	**XY2 CB33**	25.600
			220 V/6 V	1	1	N/C + N/O slow break	RH and LH sides	**XY2 CB34**	25.600

(1) See separate components, page 4/11. End spring XY2 CZ702 included.
(2) Bulb DL1 CB006 included.

Safety dialogue solutions
Emergency stop trip wire switches, type XY2 C

Complete units, pre-assembled

Customer			**Schneider Electric Industries SA**	
Company	Order N°	Delivery date	Sales office - Subsidiary Co.	Order N°

How to use this form:
- indicate the number of Emergency stop switches required,
- complete the basic reference.

Reference

Number of identical Emergency stops ☐ **XY2 CH** ☐☐☐☐☐☐☐

Model								
Emergency stop (latching)		**1**						
Degree of protection								
IP 65 (standard bellows) without tensioner			**1**					
IP 65 (silicone bellows) without tensioner			**2**					
IP 65 (standard bellows) with integral tensioner			**3**					
IP 65 (silicone bellows) with integral tensioner			**4**					
Type of reset								
Emergency stop *(1)* Reset by spring return pushbutton	Flush			**1**				
	Booted			**2**				
	Mushroom head, Ø 30			**3**				
	Key operated mushroom head, Ø 30 (key n° 421)			**4**				
	Key operated mushroom head, Ø 30 (key n° 455)			**5**				
	Key operated mushroom head, Ø 30 *(2)*			**9**				
Contact block for Emergency stop function *(3)*								
Slow break	1 N/C + N/O (N/O staggered)				**5**			
	1 N/C + N/C				**7**			
Pilot light								
Without pilot light						**0**		
With 24 V direct supply pilot light						**3**		
With 48 V direct supply pilot light						**4**		
With 130 V direct supply pilot light						**5**		
With 230 V direct supply pilot light						**7**		
1/2" NPT tapped cable entries							**H7** *(4)*	
ISO M20 tapped cable entries							**H29**	
Increased protective treatment against corrosion								**TK** *(5)*

(1) Opening of a circuit + mechanical latching in the open position.
(2) Other key numbers:

458A	520E	1242A	1243E	1344A	1422A	1431E
2123E	2132E					

(3) Emergency stop trip wire switches can only be fitted with slow break contact blocks.
(4) Only for versions without pilot light. For versions with pilot light, order an H4 version.
*(5) Protective treatment TK is only possible for switches with silicone bellows (**XY2 CH12●●●TK**, **XY2 CH14●●●H29TK**...).*

Safety dialogue solutions
Emergency stop trip wire switches, type XY2 C

Complete units, pre-assembled

Customer			Schneider Electric Industries SA	
Company	Order N°	Delivery date	Sales office - Subsidiary Co.	Order N°

How to use this form:
- indicate the number of Emergency stop switches required,
- complete the basic reference.

Reference

Number of identical Emergency stops [ ]

XY2 CE [ ] [ ] [ ] [ ] [ ] [ ] [ ]

Model								
Emergency stop (latching)	Anchor point on RH side, standard force	**1**						
	Anchor point on LH side, standard force	**2**						
	Anchor point on RH side, light force	**5**						
	Anchor point on LH side, light force	**6**						
Degree of protection and "cable tension indicator" window								
IP 65 (standard bellows) without "cable tension indicator" window			**A**					
IP 65 (silicone bellows) without "cable tension indicator" window			**C**					
IP 65 (standard bellows) with "cable tension indicator" window			**D**					
IP 65 (silicone bellows) with "cable tension indicator" window			**E**					
Type of reset								
Emergency stop *(1)* Reset by spring return pushbutton	Flush			**1**				
	Booted			**2**				
	Mushroom head, Ø 30			**3**				
	Key operated mushroom head, Ø 30 (n° 421)			**4**				
	Key operated mushroom head, Ø 30 (n° 455)			**5**				
	Key operated mushroom head, Ø 30 *(2)*			**9**				
Contact block for Emergency stop function *(3)*								
Slow break	1 N/C + N/O				**5**			
	1 N/C + N/C				**7**			
	2 N/C + N/O (compulsory with pilot light) *(4)*				**9**			
Pilot light								
Without pilot light						**0**		
With 24-48-130 V direct supply pilot light. Bulb not included (provide for 2 contact blocks)						**6**		
With 230 V direct supply, via integral resistor, pilot light. Bulb included (provide for 2 contact blocks) *(5)*						**7**		
1/2" NPT tapped cable entries							**H7** *(6)*	
Increased protective treatment against corrosion								**TK** *(7)*

(1) Opening of N/C contact + mechanical latching in the open position.
(2) Other key numbers:

458A	520E	1242A	1243E	1344A	1422A	1431E
2123E	2132E					

(3) Emergency stop trip wire switches can only be fitted with slow break contact blocks.
(4) The use of a pilot light means selecting a switch fitted with 2 N/C + N/O contacts: XY2 CE●●●9.
(5) Replacement bulb: DL1 CE130.
(6) For versions with pilot light, order an H4 version.
*(7) Protective treatment TK is only possible for switches with silicone bellows (**XY2 CE●C●●●TK, XY2 CE●E●●●H7TK**...).*

Safety dialogue solutions
Emergency stop trip wire switches, type XY2 C

803025
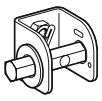
XY2 CZ203

803017
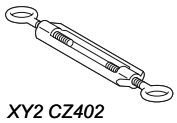
XY2 CZ402

810060

XY2 CZ503

803019

XY2 CZ524

810061

XY2 CZ601

803018

XY2 CZ602

803020
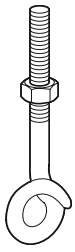
XY2 CZ705

803016

XY2 CZ708

810062

XY2 CZ701

803021
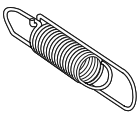
XY2 CZ702

803022
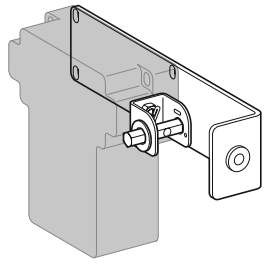
XY2 CZ917

Separate components

Description	For use with	Diameter mm	Length m	Reference	Weight kg
Galvanised cables with red sheath	XY2 CH, XY2 CE and XY2 CB	3.2	10.5	**XY2 CZ301**	0.280
			15.5	**XY2 CZ3015**	0.410
			25.5	**XY2 CZ302**	0.690
			50.5	**XY2 CZ305**	1.360
			100.5	**XY2 CZ310**	2.700
	XY2 CH and XY2 CE	5	15.5	**XY2 CZ1015**	0.850
			25.5	**XY2 CZ102**	1.400
			50.5	**XY2 CZ105**	2.750
			100.5	**XY2 CZ110**	5.500

Description	Type	For use with	Sold in lots of	Unit reference	Weight kg
Tensioner	–	XY2 CE only	1	**XY2 CZ203**	0.09
Turnbuckles	M6 x 60 + locknut	All models *(1)*	1	**XY2 CZ402**	0.060
	M8 x 70 + locknut	All models *(1)*	1	**XY2 CZ404**	0.100
Cable grips	Single	Cable Ø 3 to 5 mm	10	**XY2 CZ503**	0.007
	Double	Cable Ø 3 to 5 mm	10	**XY2 CZ513**	0.016
	Clamp	Cable Ø 3.2 mm	10	**XY2 CZ523**	0.050
		Cable Ø 5 mm	10	**XY2 CZ524**	0.080
Cable supports	Fixed	All models	10	**XY2 CZ601**	0.030
	Swivelling	All models	1	**XY2 CZ602**	0.130
	Pulley support	XY2 CH and XY2 CE	1	**XY2 CZ705**	0.060
Pulley	Cable Ø 5 mm max.	XY2 CH and XY2 CE	1	**XY2 CZ708**	0.002
Cable end protectors		Cable Ø 3.2 mm	10	**XY2 CZ701**	0.002
		Cable Ø 5 mm	10	**XY2 CZ704**	0.010
End springs		XY2 CH	1	**XY2 CZ703**	0.035
		XY2 CE and XY2 CB	1	**XY2 CZ702**	0.080

Mounting kits

Contents	For use with	Cable diameter	Length of cable	Reference	Weight
		mm	m		kg
1 tensioner **XY2 CZ203** + 1 bracket	XY2 CE	–	–	**XY2 CZ917**	0.612
1 galvanised cable + 1 cable grip **XY2 CZ523** + 1 end spring **XY2 CZ703**	XY2 CH	3.2	10	**XY2 CZ9310**	0.415
			15	**XY2 CZ9315**	0.535
1 galvanised cable + 4 cable grips **XY2 CZ523** + 1 turnbuckle **XY2 CZ404** + 1 cable support **XY2 CZ601** + 3 cable end protectors **XY2 CZ701** + 1 end spring **XY2 CZ702**	XY2 CE	3.2	25	**XY2 CZ9325**	10
	XY2 CE and XY2 CB	3.2	50	**XY2 CZ9350**	1.980
1 galvanised cable + 4 cable grips **XY2 CZ524** + 1 turnbuckle **XY2 CZ404** + 1 cable support **XY2 CZ601** + 3 cable end protectors **XY2 CZ704** + 1 end spring **XY2 CZ702**	XY2 CE	5	25	**XY2 CZ9525**	1.905
			50	**XY2 CZ9550**	3.280

Documentation

Description	For use with	Reference	Weight kg
Installation manual	XY2 CH and XY2 CE	**XCOM2512**	0.200

(1) Emergency stop trip wire switches XY2 CH13●●● and XY2 CH14●●● incorporate a cable tensioner as standard. Therefore, there is no need to order a turnbuckle.

General: page 4/4 Characteristics: page 4/6 Dimensions: page 4/13

Safety dialogue solutions
Emergency stop trip wire switches, type XY2 C

Replacement parts

Description	Type		Reference	Weight kg
Reset pushbutton (blue), spring return for XY2 CH and XY2 CE	Flush with "R" marked on push		**ZA2 BA639**	0.030
	Booted		**ZA2 BP6**	0.025
	Mushroom head, Ø 30		**ZA2 BC64**	0.045
	Key operated mushroom head, Ø 30 (key n° 421)		**ZA2 BS06212**	0.090
	Key operated mushroom head, Ø 30 (key n° 455)		**ZA2 BS062**	0.090
Keys for reset button	N° 421		**Q99900911**	0.006
	N° 455		**Q99900901**	0.006
Pilot light head assembly	Orange, for XY2 CH and XY2 CE		**ZA2 BV05**	0.015
Pilot light lens	Orange, for XY2 CH and XY2 CE		**ZB2 BV015**	0.003
Fixing nut	Black plastic nut for head ZA2 B		**ZA2 BZ901**	0.002
Fixing nut tightening tool	Black plastic socket wrench for fixing nut ZA2 BZ901		**ZA2 BZ901**	0.060
Pilot lights With bulb DL1 AA●●● included	Orange, for XY2 CH	24 V	**XY2 CZ0024** *(1)*	0.035
		48 V	**XY2 CZ0048** *(1)*	0.035
		130 V	**XY2 CZ0130** *(1)*	0.035
		230 V	**XY2 CZ0230** *(1)*	0.035
	Red, for XY2 CB	24 V	**9001 KP35R9**	0.134
		48 V	**9001 KP36R9**	0.134
		120 V	**9001 KP1R9**	0.210
		230 V	**9001 KP7R9**	0.210

803023

XY2 CZ●●●●

111270

9001 KP3●R9

Description	Type		Sold in lots of	Unit reference	Weight kg
Incandescent bulbs	Screw base fitting for XY2 CH	24 V - 6 W	10	**DL1 AA024**	0.004
		48 V - 6 W	10	**DL1 AA048**	0.004
		130 V - 6 W	10	**DL1 AA127**	0.004
		230 V - 6 W	10	**DL1 AA220**	0.004
	BA 9s base fitting for XY2 CE and XY2 CB	24 V - 2.6 W	10	**DL1 CE024**	0.002
		48 V - 2.6 W	10	**DL1 CE048**	0.002
	BA 9s base fitting for XY2 CE	130 V - 2.6 W	10	**DL1 CE130**	0.002
	BA 9s base fitting for XY2 CB 120 V and 230 V	6 V - 1.2 W	10	**DL1 CB006**	0.002
Packet of 5 collars	For mounting DL1 AA127 and DL1 AA220 bulbs in pilot lights XY2 CZ●●●		5	**XY2 CZ908**	0.018
Dust and damp protecting bellows	For XY2 CE	Polychloroprene	1	**XY2 CZ901**	0.017
		Silicone	1	**XY2 CZ904**	0.005
	For XY2 CH	Polychloroprene	1	**XY2 CZ902**	0.017
		Silicone	1	**XY2 CZ903**	0.005
Adaptor	For XY2 CB	ISO M20	5	**DE9 RP13520**	0.050

807505

XY2 CZ901

803024

XY2 CZ902

(1) Only for use as replacement parts for switches pre-fitted with pilot lights. CCC and UL-CSA approvals no longer apply if a pilot light XY2 CZ●●● is mounted on Emergency stops XY2 CH.

General: page 4/4 Characteristics: page 4/6 Dimensions: page 4/13

Safety dialogue solutions
Emergency stop trip wire switches, type XY2 C

XY2 CH

Without pilot light

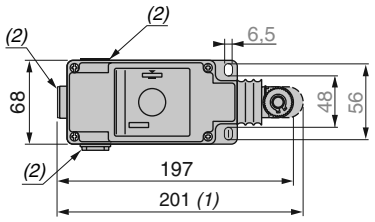

With pilot light

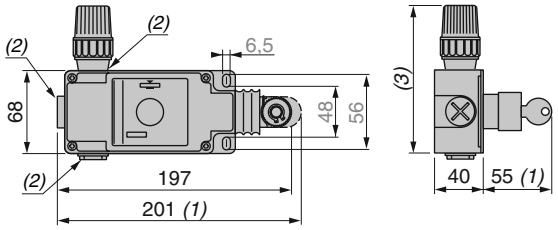

(1) Maximum extension.
*(2) Tapped entries for n° 13 (Pg 13.5) cable gland. For ISO M20 the reference becomes **XY2 CH●●●●●H29**.*
(3) 121 mm: 24 V and 48 V versions. 131 mm: 130 V and 230 V versions.

XY2 CE

XY2 CE●A●●●, XY2 CE●C●●●

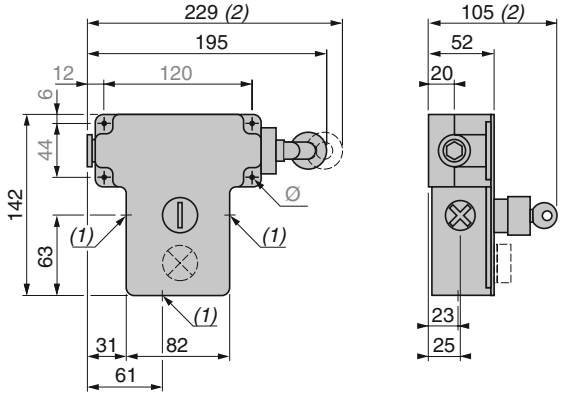

XY2 CE●A●●● + XY2 CZ917 (tensioner + bracket)

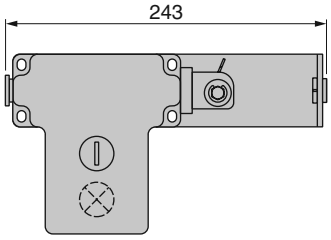

(1) 3 plain holes for n° 13 (Pg 13.5) or ISO M20 cable gland.
(2) Maximum extension.
Ø: 4 elongated holes Ø 6 mm.

XY2 CB

Without pilot light

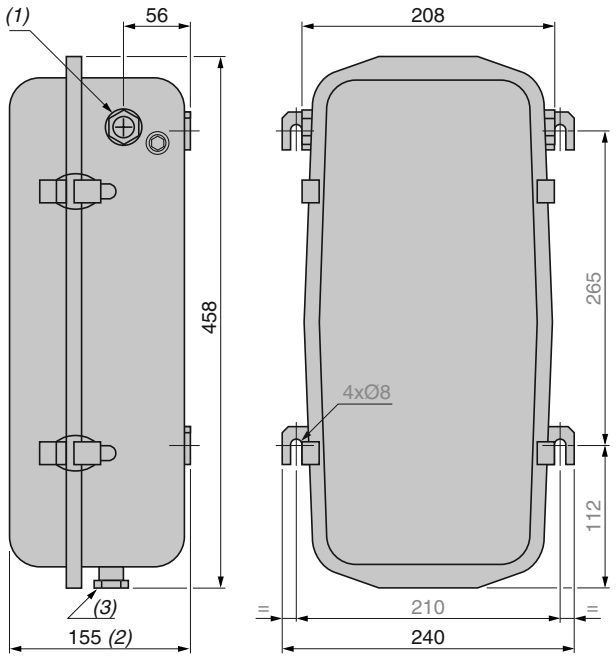

With pilot light

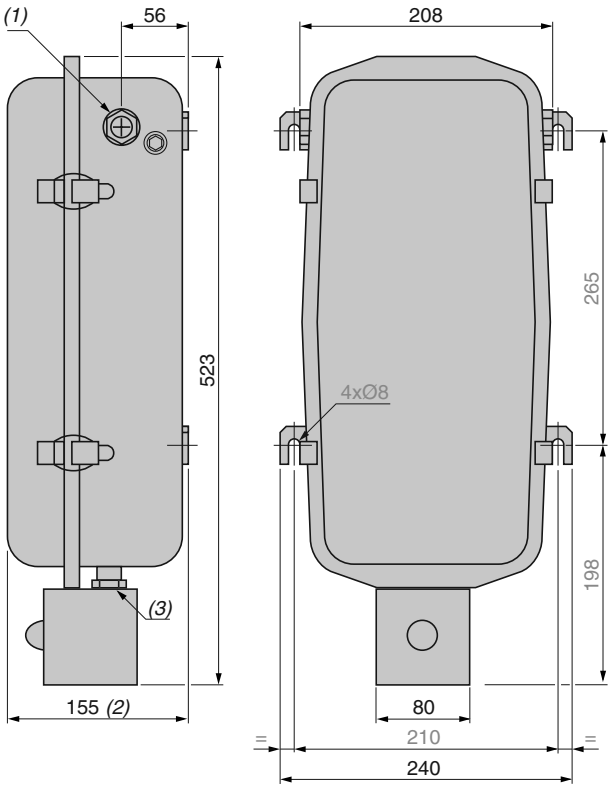

(1) 2 access points for operating cable.
(2) + 125 for opening cover.
(3) 1 tapped entry for n° 13 (Pg 13.5) cable gland. For ISO M20 use adaptor DE9 RP13520.

Accessories

XY2 CZ705

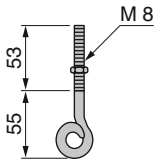

XY2 CZ708

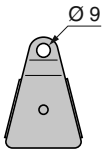

4

General: page 4/5 | Characteristics: page 4/6 | References: page 4/7

Safety dialogue solutions
Foot switches, Harmony type XPE

Presentation

Foot switches type XPE are an ideal solution for providing start and stop instructions for many types of industrial machines, running in various operating modes: normal (pulsed) start, inching, hold to run.

The range comprises metal case foot switches (heavy duty, high risk) complying to very strict regulations, and plastic case foot switches (light duty, low risk).

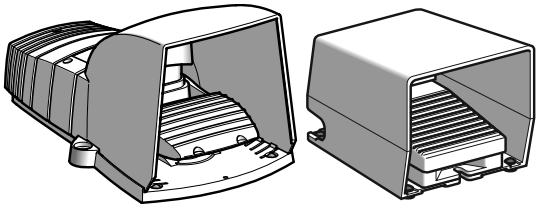

Fitted with a protective cover, the foot switches are for applications where, for each issuing of the start instruction, a high level of danger exists **(high risk)**.

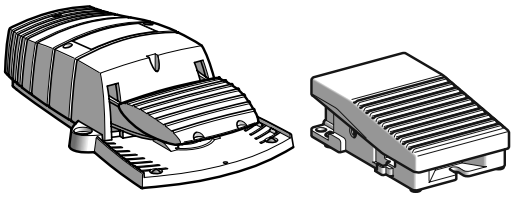

Foot switches **without a protective cover** are suitable for applications where the issuing of the start instruction presents a **reduced level of danger**.

Contact

Switches incorporate snap action contacts with positive opening operation

The foot switches can incorporate **one or two N/C + N/O contact blocks**.

Positive opening operation on release of pedal: the hold down or return to the rest position of the pedal (machine stop) is positive acting.

Terminology

Positive opening operation

A switch meets this requirement when all its N/C contacts can be switched to the open position with certainty, i.e. there are no flexible links between the moving contacts and the actuator to which the operating force is applied.

All pedal operated foot switches incorporate a snap action N/C + N/O contact block with positive opening operation, and conform fully to standard IEC 60947-5-1 Section 3.

Snap action contact (quick break)

The displacement speed of the moving contacts is not related to the speed at which the contact actuator is operated. This feature gives consistent electrical performance, even when the contact actuator device is operated at low speeds.

Characteristics: pages 4/18 and 4/22
References: pages 4/19 and 4/23
Dimensions: pages 4/21 and 4/24

Safety dialogue solutions
Foot switches, Harmony type XPE

Start instructions

Foot switches XPE with protective cover are ideally suited for issuing a safety "Start" instruction for potentially dangerous machines.

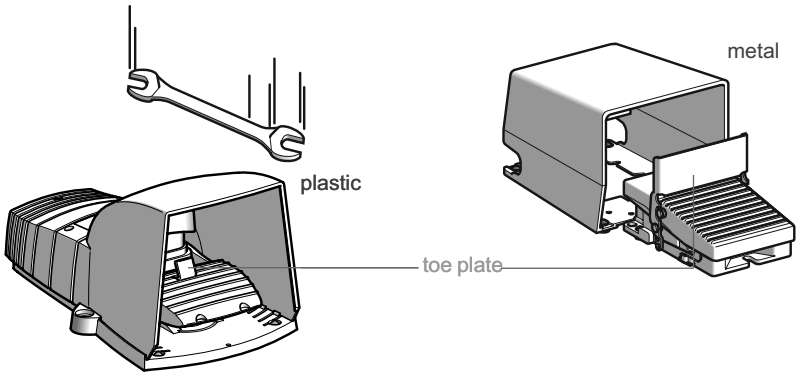

The protective cover over the operating pedal avoids the risk of accidental operation, either by human action or by falling objects, which could result in unintentional starting of the machine.

A trigger mechanism **(toe plate)** enables locking of the pedal in the rest (released) position.

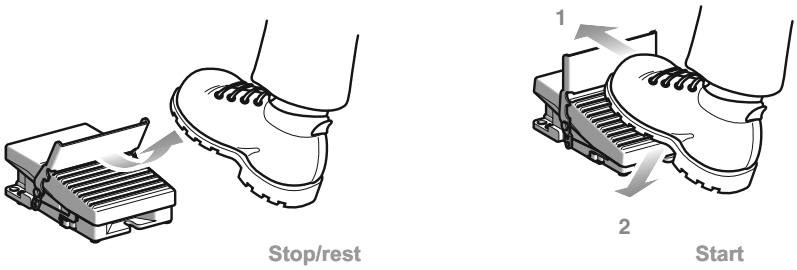

Positive action is required on the toe plate 1 before the pedal 2 can be depressed to start the machine.

On releasing the pedal to stop the machine, the trigger mechanism re-engages and locks the pedal in the rest position.

Normal stop instructions

All foot switches of the XPE range can be used for issuing a normal stop instruction to a machine.

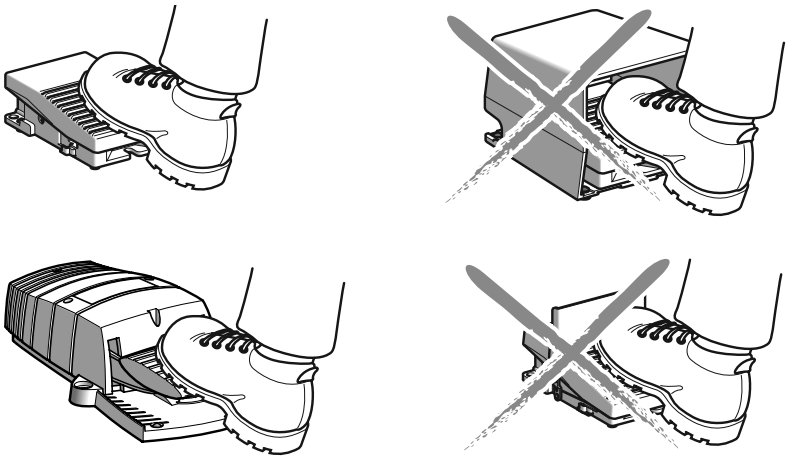

Never use the protective cover nor the trigger mechanism for this type of application. Access to the stop control must be as unrestricted as possible and without any constraints.

For machine stop instructions, use the N/C contact(s).

4

Safety dialogue solutions
Foot switches, Harmony type XPE

Pedal latching device when depressed

Foot switches with pedal latching device are particularly suited for the control of "hold to run" machines and also, for adjustment operations.

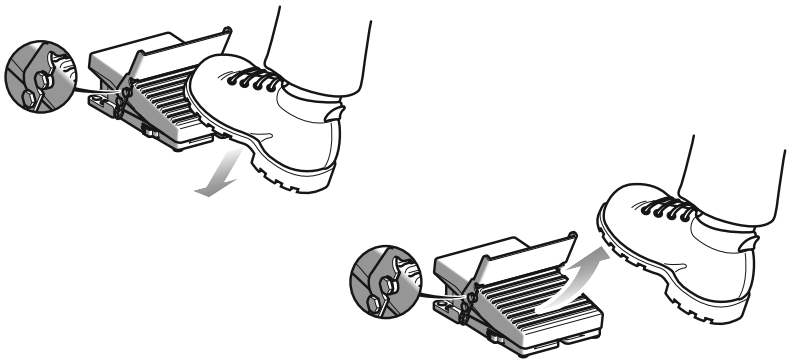

Pressing the pedal issues the machine start instruction and, when the pedal reaches its stop, it latches in the operated position.

Removing the foot from the pedal will not stop the "machine" cycle **(hold to run)**, the pedal remains latched.

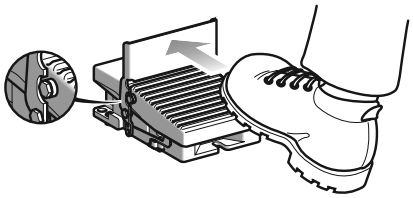

For issuing a normal stop instruction, the foot is replaced on the pedal and the toe plate operated: this returns the pedal to the rest position.

Switches with 2 step contact operation

Foot switches featuring 2 step contact operation are ideal for applications involving 2-speed machines.
Examples:
- **First speed: low (used for setting-up, adjustment or tool maintenance).**
- **Second speed: fast (normal machine operating speed).**

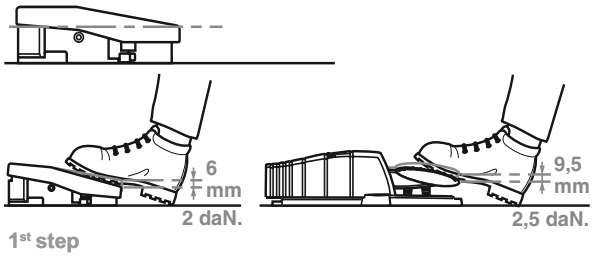

The first step, at 6 mm pedal travel and light foot pressure (2 daN), actuates a N/C + N/O contact block.

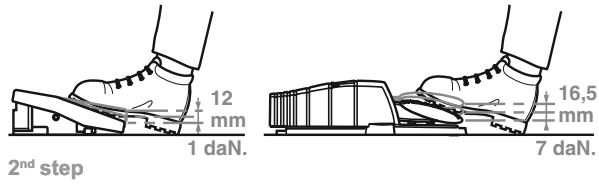

The second step, at maximum pedal travel (12 mm) and required foot pressure (9 daN), actuates a second N/C + N/O contact block.

Applications

Many types of machines are fitted with foot switches

- Bending machine
- Dosing machine
- Assembly station
- Packaging machines
- Cutting presses, stamping presses
- Machine tools (numerical control, lathes, milling machines, grinders, machining centres)
- Guillotines, cutters, folders, saws
- Forging machines, rolling machines, cold metal forming machines

Characteristics: pages 4/18 and 4/22
References: pages 4/19 and 4/23
Dimensions: pages 4/21 and 4/24

Safety dialogue solutions
Foot switches, Harmony type XPE

Foot switches used in conjunction with two-hand control stations

Foot switches XPE can be mounted directly on the baseplate (without drilling additional fixing holes) of the pedestal XY2 SB90 for two-hand control stations XY2 SB7●.

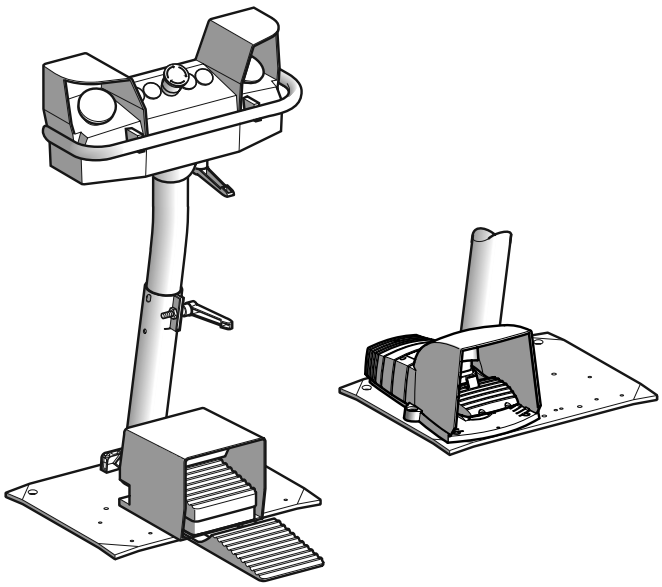

The baseplate of the two-hand control station pedestal XY2 SB90 is pre-drilled with fixing holes to suit the mounting of either:

- One XPE foot switch, with or without protective cover.
- Two XPE R foot switches, each with its own protective cover or fitted with a common (double) cover.

Ergonomic

The protective cover is very strong and is sufficiently dimensioned to accommodate all types of footwear (large size, safety boots, etc.).

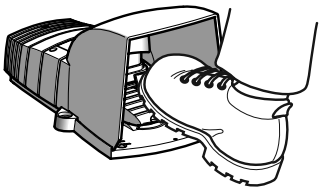

The foot switch is designed such that the operating pedal is close to the ground and at a comfortable angle.

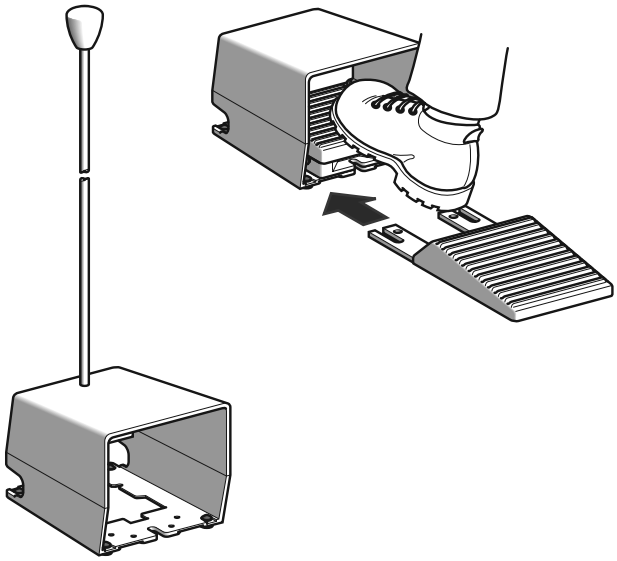

Various accessories improve the working comfort for machine operators and help to avoid discomfort in the base of the spine due to unbalanced positioning of the pelvis:

- Heel rest (metal XPE).
- Hand grip for mounting on protective cover.

4

Characteristics: pages 4/18 and 4/22
References: pages 4/19 and 4/23
Dimensions: pages 4/21 and 4/24

Safety dialogue solutions
Metal foot switches, Universal, Harmony types XPE M/R

Environment			
Conformity to standards	Without protective cover		EN/IEC 60947-5-1, CSA C22 2 n° 14 (if H2 specified)
	With protective cover		NF E 09-031
Product certifications	Standard version		FI, CSA A300 - Q300 with tapped entries for cable gland
	Special version		CSA A300 - Q300 with 1/2" NPT adaptor
Protective treatment	Standard version		"TC"
	Special version		"TH"
Ambient air temperature	For operation	**°C**	- 25…+ 70
	For storage	**°C**	- 40…+ 70
Vibration resistance			15 gn (10…500 Hz) conforming to IEC 60068-2-6
Shock resistance			20 gn conforming to IEC 60068-2-27 (150 gn conforming to NF E 09-031)
Electric shock protection			Class I conforming to EN/IEC 61140 and NF C 20-030
Mechanical life			15 million operating cycles
Degree of protection			IP 66 conforming to IEC 60529 and IP 669 conforming to NF C 20-010 (with protective cover)
Cable entries			See dimensions, page 4/21
Contact block characteristics			
Rated operational characteristics	∼ AC-15		A300 or Ue = 240 V, Ie = 3 A
	⎓ DC-13		Q300 or Ue = 250 V, Ie = 0.27 A conforming to EN/IEC 60947-5-1 Appendix A
Rated insulation voltage		**V**	Ui = 500, degree of pollution 3 conforming to EN/IEC 60947-1, group C conforming to NF C 20-040 and VDE 0110
			Ui = 300 conforming to UL 508, CSA C22-2 n° 14
Rated impulse withstand voltage		**kV**	Uimp = 6 conforming to EN/IEC 60947-1
Positive operation			N/C contact with positive opening operation conforming to EN/IEC 60947-5-1 Appendix K
Resistance across terminals		**mΩ**	≤ 25 conforming to NF C 93-050 method A or IEC 60255-7 category 3
Short-circuit protection			10 A cartridge fuse type gG (gl) conforming to EN/IEC 60947-5-1, VDE 0660-200
Foot switches with snap action contacts	Operational power		Conforming to EN/IEC 60947-5-1 Appendix C
	Utilisation categories		AC-15 and DC-13
	Operating rate		3600 operating cycles/hour. Load factor: 0.5

a.c. supply ∼ 50-60 Hz

⎓ Inductive circuit

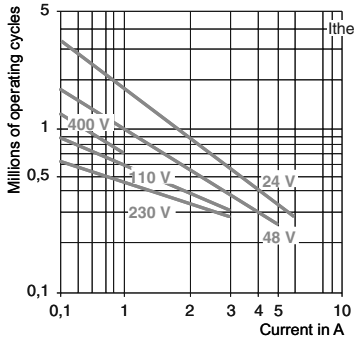

d.c. supply ⎓

Power broken in W for 5 million operating cycles

Voltage	V	24	48	120
⎓	W	10	7	4

Foot switches with analogue output	Nominal supply voltage	**V**	⎓ 24…48
	Voltage limits	**V**	⎓ 19…58
	Current consumption, no-load	**mA**	4
	Output current drift (IS) in relation to temperature		0…+ 50 °C: + 2…- 6%
			- 25…+ 70 °C: + 2…- 12%

Output current curve

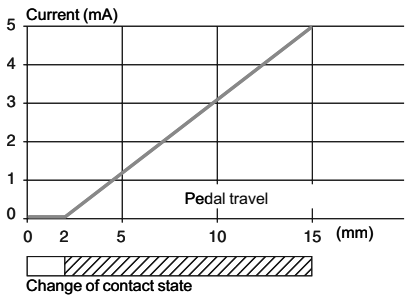

Wiring scheme

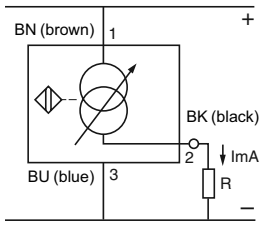

Connection	Screw clamp terminals		Maximum clamping capacity: 1 x 2.5 mm² or 2 x 1.5 mm² with or without cable end

General: page 4/14 References: page 4/19 Dimensions: page 4/21

Safety dialogue solutions
Metal foot switches, Universal, Harmony types XPE M/R



XPE M510



XPE R5100D



XPE M310



XPE R3100D

Single and double pedal foot switches with protective cover

Description	Pedal	Contact operation		Colour	Reference	Weight kg
Metal With trigger mechanism requiring positive action to allow pedal operation	Single	1 step	1 N/C + N/O	Blue	**XPE M510**	2.570
	Double	1 step	2 x 1 N/C + N/O	Blue	**XPE M5100D**	6.070
	Single	1 step	1 N/C + N/O	Orange	**XPE R510**	2.570
	Double	1 step	2 x 1 N/C + N/O	Orange	**XPE R5100D**	6.070
	Single	1 step	2 N/C + N/O	Blue	**XPE M511**	2.590
	Double	1 step	2 x 2 N/C + N/O	Blue	**XPE M5110D**	6.090
	Single	1 step	2 N/C + N/O	Orange	**XPE R511**	2.590
	Double	1 step	2 x 2 N/C + N/O	Orange	**XPE R5110D**	6.090
	Single	2 step	2 N/C + N/O	Blue	**XPE M711**	2.590
				Orange	**XPE R711**	2.590
	Single	1 step with analogue output	2 N/C + N/O	Blue	**XPE M529**	2.600
				Orange	**XPE R529**	2.600
Metal Without trigger mechanism	Single	1 step	1 N/C + N/O	Blue	**XPE M310**	2.400
	Double	1 step	2 x 1 N/C + N/O	Blue	**XPE M3100D**	5.900
	Single	1 step	1 N/C + N/O	Orange	**XPE R310**	2.400
	Double	1 step	2 x 1 N/C + N/O	Orange	**XPE R3100D**	5.900
	Single	1 step	2 N/C + N/O	Blue	**XPE M311**	2.420
	Double	1 step	2 x 2 N/C + N/O	Blue	**XPE M3110D**	5.920
	Single	1 step	2 N/C + N/O	Orange	**XPE R311**	2.420
	Double	1 step	2 x 2 N/C + N/O	Orange	**XPE R3110D**	5.920
	Single	1 step latching	1 N/C + N/O	Blue	**XPE M410**	2.400
				Orange	**XPE R410**	2.420
	Single	2 step	2 N/C + N/O	Blue	**XPE M611**	2.420
				Orange	**XPE R611**	2.420
	Single	1 step with analogue output	2 N/C + N/O	Blue	**XPE M329**	2.420
	Double	2 step + 1 step	2 x 1 N/C + N/O + 1 N/C + N/O	Blue	**XPE M6210D**	5.900

General: page 4/14 Characteristics: page 4/18 Dimensions: page 4/21

Safety dialogue solutions
Metal foot switches, Universal, Harmony types XPE M/R



XPE R810



XPE M110

Foot switches without protective cover

Description	Contact operation		Colour	Reference	Weight kg
Metal With trigger mechanism requiring positive action to allow pedal operation	1 step	1 N/C + N/O	Blue	**XPE M810**	1.200
			Orange	**XPE R810**	1.200
		2 N/C + N/O	Blue	**XPE M811**	1.220
			Orange	**XPE R811**	1.220
	2 step	2 N/C + N/O	Blue	**XPE M911**	1.220
			Orange	**XPE R911**	1.220
	Analogue output	2 N/C + N/O	Blue	**XPE M929**	1.220
			Orange	**XPE R929**	1.220
Metal Without trigger mechanism	1 step	1 N/C + N/O	Blue	**XPE M110** *(1)*	1.200
			Orange	**XPE R110** *(1)*	1.200
		2 N/C + N/O	Blue	**XPE M111** *(1)*	1.220
			Orange	**XPE R111** *(1)*	1.220
	2 step	2 N/C + N/O	Blue	**XPE M211** *(1)*	1.220
			Orange	**XPE R211** *(1)*	1.220
	Analogue output	2 N/C + N/O	Orange	**XPE R229**	1.220

Accessories

Description	For use with	Unit reference	Weight kg
Single protective cover	XPE M	**XPE Z901**	1.200
	XPE R	**XPE Z911**	1.200
Double protective cover	XPE M	**XPE Z921**	1.200
	XPE R	**XPE Z931**	1.200
Hand grip for protective cover	XPE Z901 or XPE Z911	**XPE Z913**	0.450
Heel rest	XPE M	**XPE Z902**	0.240
	XPE R	**XPE Z912**	0.240
Trigger mechanism	XPE M or XPE R	**XPE Z903**	0.170
Latching device (replacement for foot switches with this feature)	XPE M or XPE R	**XPE Z904**	0.170
Cable clamp	XPE M or XPE R	**XPE Z905**	0.010
Contact blocks Snap action	1 step switches: 1st or 2nd N/C + N/O 2 step switches: 1st N/C + N/O	**XE2S P4151**	0.020
	2 step switches: 2nd N/C + N/O	**XE2S P4151B**	0.020
ISO M20 adaptor **(Sold in lots of 5)**	XPE M or XPE R	**DE9 RA1620**	0.050

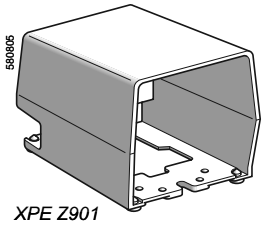

XPE Z901

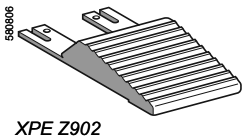

XPE Z902

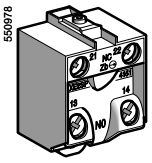

XE2S P4151●

*(1) To order an ATEX D version of the product (protection against dust), add **EX** to the end of the reference. Example: **XPE M110EX**.*

General: page 4/14 Characteristics: page 4/18 Dimensions: page 4/21

Safety dialogue solutions
Metal foot switches, Universal,
Harmony types XPE M/R

XPE M, XPE R without protective cover

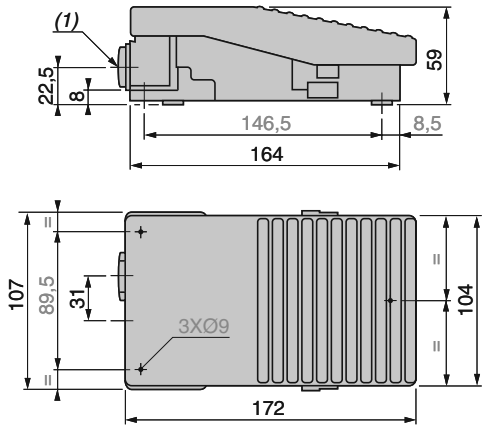

XPE M, XPE R with protective cover

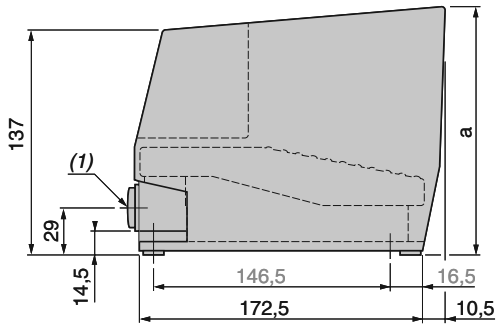

Single

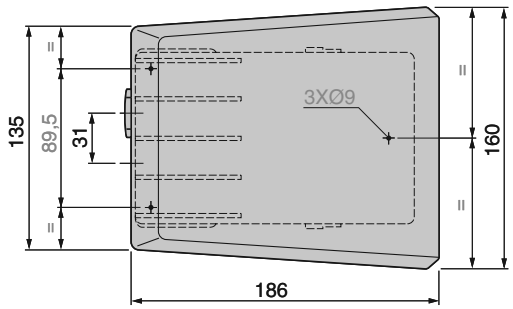

Double

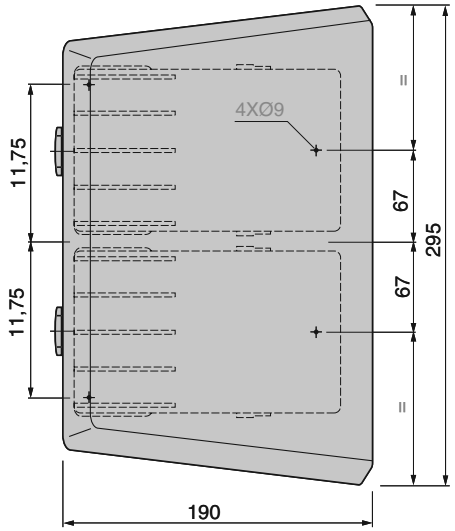

XPE Z913

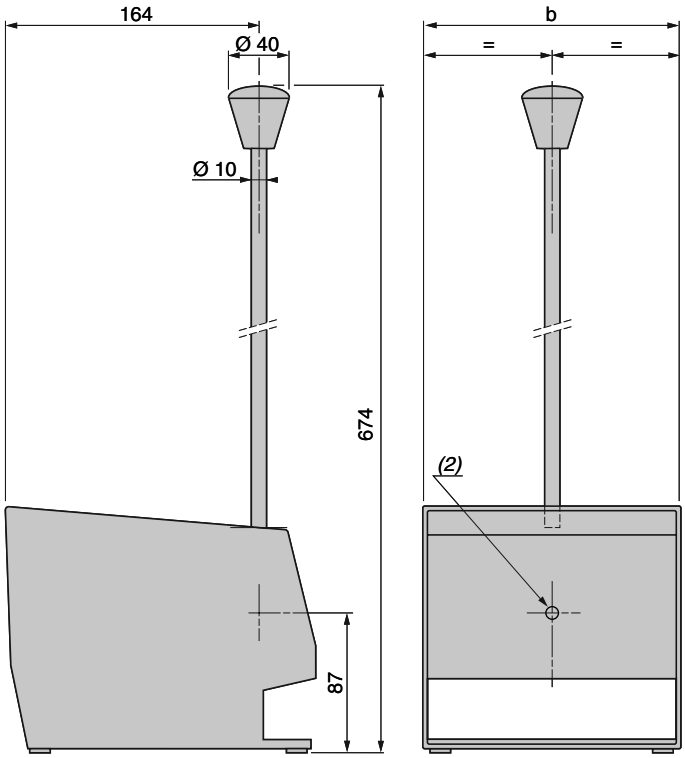

	a	b
Single pedal	152	160
Double pedal	155	295

(1) 2 tapped entries for n° 16 (Pg 16) cable gland. For ISO M20, use adaptor DE9 RA1620.
(2) 1 Ø 6 plain hole.

Safety dialogue solutions
Plastic foot switches,
Harmony types XPE A/B/G/Y

Environment

Conformity to standards			**XPE A, XPE B, XPE G, XPE Y** without protective cover: IEC/EN 60947-5-1 **XPE B, XPE G**: UL 508, CSA C22-2 n° 14
			XPE B, XPE G with protective cover: NF E 09-031
Product certifications	Standard version		**XPE B, XPE G**: UL, CSA A300 - Q300 with knock-out entries for ISO M20 cable gland
Protective treatment	Standard version		"TH"
Ambient air temperature	For operation	**°C**	**XPE B, XPE G**: - 25…+ 70 **XPE A, XPE Y**: - 25…+ 55
	For storage	**°C**	- 40…+ 70
Vibration resistance	Conforming to IEC 60068-2-6		5 gn (10…500 Hz)
Shock resistance	Conforming to IEC 60068-2-27		**XPE A**: 25 gn, **XPE B, XPE G, XPE Y**: 30 gn
Electric shock protection	Conforming to IEC/EN 61140 and NF C 20-030		Class II
Mechanical life			**XPE A**: 2 million operating cycles **XPE Y**: 5 million operating cycles **XPE B, XPE G**: 10 million operating cycles
Degree of protection			**XPE A**: IP 43 conforming to IEC 60529 **XPE Y**: IP 55 conforming to IEC 60529
			XPE B, XPE G: IP 66 conforming to IEC 60529
Cable entries			See dimensions, pages 4/24 and 4/25

Contact block characteristics

Rated operational characteristics			∼ AC-15; A 300 or Ue = 240 V, Ie = 3 A
			⎓ DC-13; Q 300 or Ue = 250 V, Ie = 0.27 A conforming to IEC/EN 60947-5-1 Appendix A
Rated insulation voltage			Ui = 500 V degree of pollution 3 conforming to IEC/EN 60947-1, group C conforming to NF C 20-040 and VDE 0110
			Ui = 300 V conforming to UL 508, CSA C22-2 n° 14
Rated impulse withstand voltage			Uimp = 6 kV conforming to IEC/EN 60947-1
Positive operation			N/C contact with positive opening operation conforming to IEC/EN 60947-5-1 Appendix K
Resistance across terminals			≤ 25 mΩ conforming to NF C 93-050 method A or IEC 60255-7 category 3
Short-circuit protection			10 A cartridge fuse type gG (gl) conforming to IEC/EN 60947-5-1, VDE 0660-200

Operational power
conforming to IEC/EN 60947-5-1 Appendix C

Foot switches with snap action contacts

Utilisation categories AC-15 and DC-13
Operating rate: 3600 operating cycles/hour
Load factor: 0.5

a.c. supply ∼ 50-60 Hz
Inductive circuit

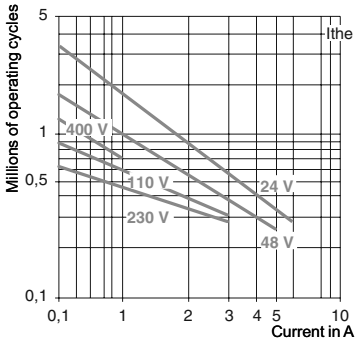

d.c. supply ⎓

Power broken in W for 5 million operating cycles				
Voltage	V	24	48	120
	W	10	7	4

Connection			Screw clamp terminals
			Maximum clamping capacity: 1 x 2.5 mm² or 2 x 1.5 mm² with or without cable end

General: page 4/14 References: page 4/23 Dimensions: page 4/24

Safety dialogue solutions
Plastic foot switches, Harmony types XPE A/B/G/Y



XPE ●510



XPE ●310



XPE G810



XPE ●110



XPE A110

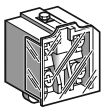

XE2S P4151

Single pedal foot switches with protective cover

Description	Contact operation		Housing colour	Reference	Weight kg
With trigger mechanism requiring positive action to allow pedal operation	1 step	1 N/C + N/O	Yellow	**XPE Y510** *(1)*	0.700
			Blue	**XPE B510**	0.700
			Grey	**XPE G510**	0.700
		2 N/C + N/O	Yellow	**XPE Y511** *(1)*	0.700
			Blue	**XPE B511**	0.700
			Grey	**XPE G511**	0.700
	2 step	2 N/C + N/O	Yellow	**XPE Y711** *(1)*	0.700
			Blue	**XPE B711**	0.700
			Grey	**XPE G711**	0.700
Without trigger mechanism	1 step	1 N/C + N/O	Yellow	**XPE Y310**	0.690
			Blue	**XPE B310**	0.690
			Grey	**XPE G310**	0.690
		2 N/C + N/O	Yellow	**XPE Y311** *(1)*	0.690
			Blue	**XPE B311**	0.690
			Grey	**XPE G311**	0.690
	2 step	2 N/C + N/O	Yellow	**XPE Y611** *(1)*	0.690
			Blue	**XPE B611**	0.690
			Grey	**XPE G611**	0.690

Foot switches without protective cover

Description	Contact operation		Housing colour	Reference	Weight kg
With trigger mechanism requiring positive action to allow pedal operation	1 step	1 N/C + N/O	Grey	**XPE G810**	0.580
	2 step	2 N/C + N/O	Grey	**XPE G911**	0.580
Without trigger mechanism	1 step	1 N/C + N/O	Yellow	**XPE Y110** *(1)*	0.570
			Blue	**XPE B110**	0.570
			Grey	**XPE G110**	0.570
			Black	**XPE A110**	0.275
		2 N/C + N/O	Blue	**XPE B111**	0.570
			Grey	**XPE G111**	0.570
			Black	**XPE A111**	0.295
	2 step	2 N/C + N/O	Yellow	**XPE Y211** *(1)*	0.570
			Blue	**XPE B211**	0.570
			Grey	**XPE G211**	0.570

Accessories for foot switches, with or without protective cover

Description	For use with	Sold in lots of	Unit reference	Weight kg
M20 x 1.5 cable gland	Cable Ø 5…10 mm	5	**DE9RA200612**	0.014
	Cable Ø 7…13 mm	5	**DE9RA201014**	0.014
Contact blocks, snap action	1 or 2 step switches	1	**XE2S P4151**	0.020

(1) IP 55, not UL, CSA approved.

4

Safety dialogue solutions
Plastic foot switches,
Harmony types XPE B/G/Y

XPE B, XPE G, XPE Y

With protective cover

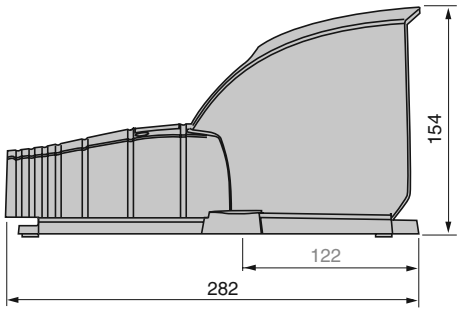

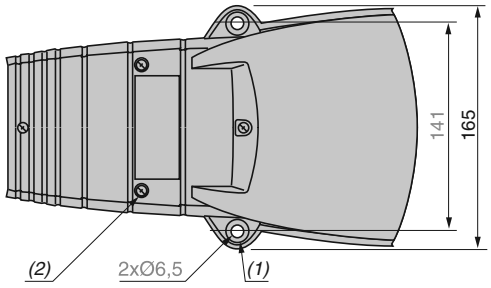

(1) Ø 16 x 4 counterbored hole.
(2) 4 cover fixing screws: stainless steel. Tightening torque: 1 N.m.

Without protective cover

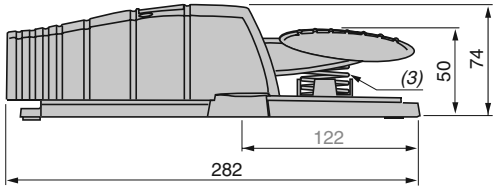

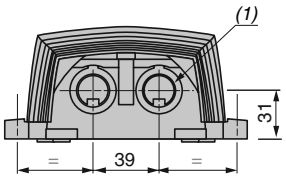

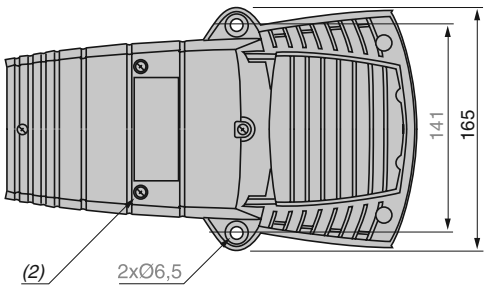

(1) 2 plain holes for ISO M20 or n° 13 (Pg 13.5) cable gland.
(2) 4 cover fixing screws: stainless steel. Tightening torque: 1 N.m.
(3) Return spring: stainless steel.

Safety dialogue solutions
Plastic foot switches,
Harmony type XPE A

XPE A

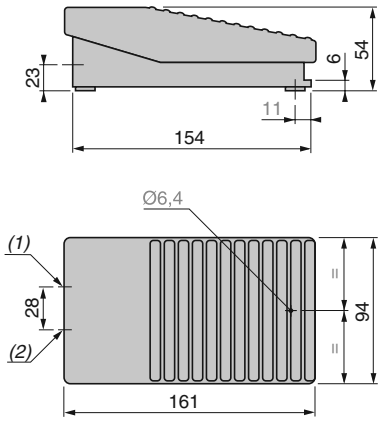

(1) 1 plain hole for ISO M20 or n° 13 (Pg 13.5) cable gland.
(2) 1 plain hole for ISO M20 or n° 9 (Pg 11) cable gland.

Operating principle

Enabling switches, comprising an XY2 AU grip and an XPS VC monitoring module, allow authorised personnel to undertake adjustment, programming or maintenance operations near machine equipment hazardous zones, providing certain conditions are met.

In effect, to gain access, these operations, often performed at reduced speed, must be selected by authorised personnel using selectors, with or without keys. Once selection is made, the enabling switch temporarily assumes control of the hazardous zone's usual protection measures. Important note: the enabling switch alone must not lead to the actuation of any dangerous movements associated with the machine; a secondary, intentional control action is required from the operator. In addition, each person in the hazardous zone must be provided with an enabling switch to ensure their own safety.

Environment

Conforming to standards	Products		IEC/EN 60947-1 , IEC/EN 60947-5-1, cUL us 508 and CSA C22-2 n° 14
	Machine assemblies		IEC/EN 60204-1
Protective treatment			Standard version: "TC"
Ambient air temperature	Operation	**°C**	- 10…+ 60
	Storage	**°C**	- 40…+70
Vibration resistance			6 gn (5…55 Hz) conforming to IEC 60068-2-6
Shock resistance			10 gn (11 ms) conforming to IEC 60068-2-27
Electric shock protection			Class II conforming to IEC/EN 61140
Degree of protection			IP 66 conforming to IEC 60529, IP 65 with a pushbutton, IK 06 conforming to EN 50102
Mechanical durability		**Op. cycle**	1 million
Enclosure			Double insulated enclosure made of PA66
Cable diameter		**mm**	7…13

Contact block characteristics

Rated operational characteristics		~ AC-15 : C300 or Ue = 250 V, Ie = 1.5 A or Ue = 125 V, Ie = 0.75 A ⎓ DC-13 : R300 or Ue = 250 V, Ie = 0.1 A or Ue = 125 V, Ie = 0.22 A conforming to IEC 60947-5-1 Appendix A
Thermal current (Ithe)	**A**	5
Rated insulation voltage (Ui)	**V**	250, degree of pollution III (II inside) conforming to IEC 60947-1 125, contact 7-8
Rated impulse withstand voltage (Uimp)	**kV**	2.5 conforming to EN 60947-1
Positive operation		2 3-position contacts with positive opening operation conforming to IEC 60947-5-1 appendix K
Contact operation		Slow break
Resistance across terminals	**mΩ**	≤ 50
Actuation force		1…2: 12 N 2…3: 50 N
Terminal referencing		Numbered conforming to CENELEC EN 50013
Short-circuit protection		4 A cartridge fuse type gG (gl)
Connection	**mm²**	Terminal block, 1 x 0.34…1 x 1.5

Safety dialogue solutions
Enabling switches
For safety circuits

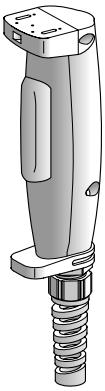

XY2 AU●

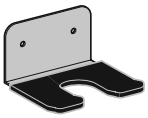

XY2 AZ1



XY2 AZ2

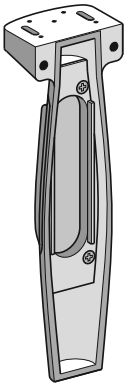

XY2 AZ3

References

Number of contacts	Contact type	Contact blocks and scheme	Reference	Weight kg
3	2 enabling 3 positions + 1 N/C	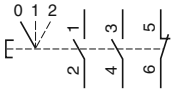	**XY2 AU1**	0.310
	2 enabling 3 positions + 1 N/C + 1 N/O supplementary contact	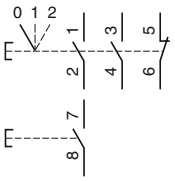	**XY2 AU2**	0.320

Separate components and spare parts

Description	Reference	Weight kg
Grip support	**XY2 AZ1**	0.215
Cover kit for key actuator XCS Z01 or XCS Z11 only applicable to XY2 AU1	**XY2 AZ2**	0.015
Cover	**XY2 AZ3**	0.060

Dimensions

XY2 AU1

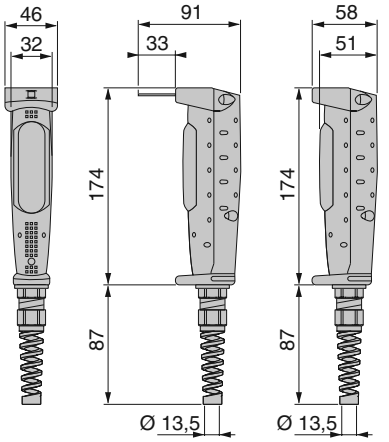

XY2 AU2

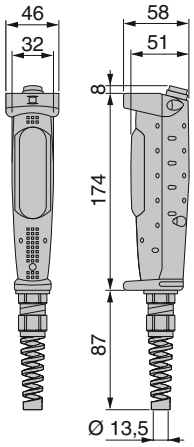

XY2 AZ1

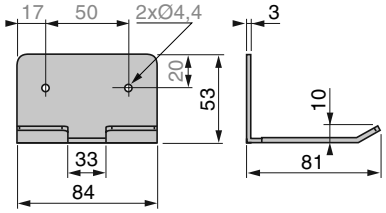

Connection example

With XPS VC safety module

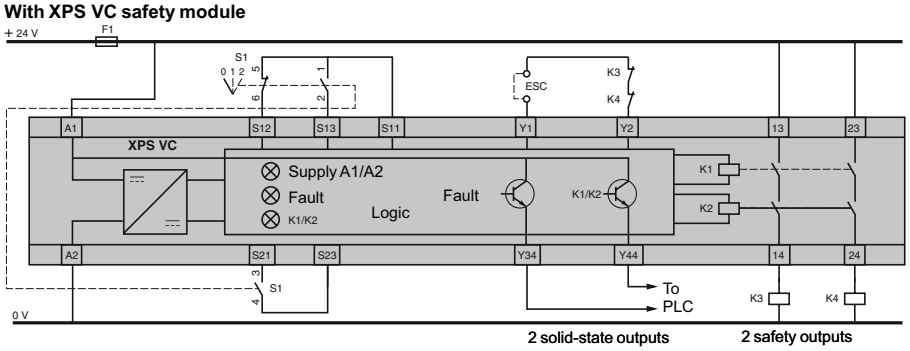

ESC : external start conditions

State of XY2 AU● contacts

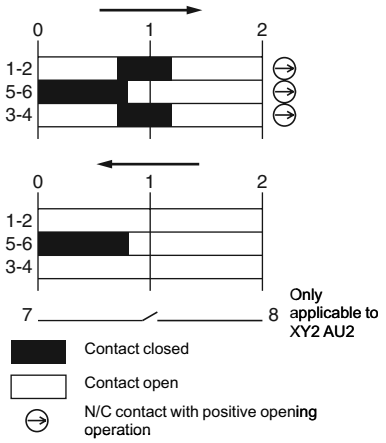

Safety dialogue solutions
Two-hand ergonomic control stations
With Harmony XB4 B control units

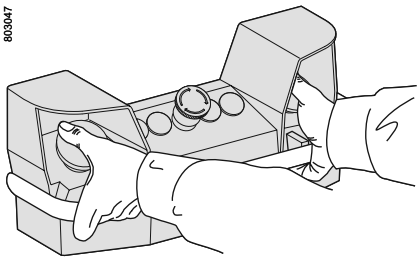

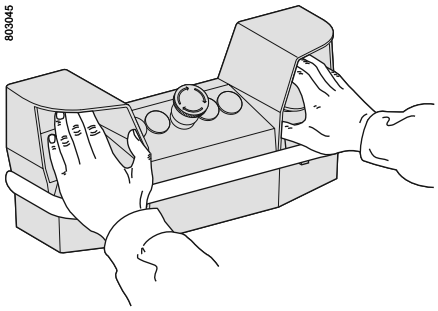

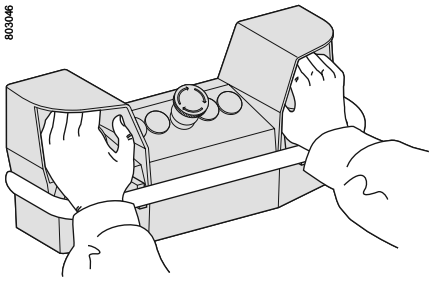

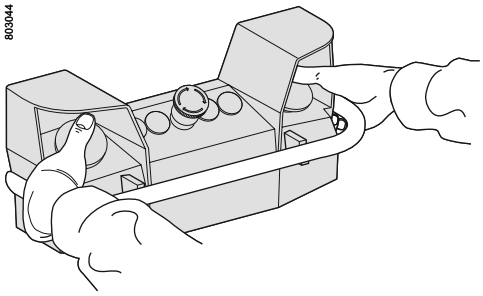

Presentation

The design of the control station incorporates features to significantly reduce occupational illnesses associated with repetitive movements of the hands, particularly “carpal tunnel syndrome”.

The health and comfort of the machine operator is assured by:
- the numerous alternative hand positions for operating the 2 pushbutton actuators, see diagrams to left,
- a hand rail,
- simple and fast adjustments of control station position.

This two-hand control station protects machine operators against both industrial accidents and illnesses related to their occupation.

It conforms to the following European safety standards:
- EN 574 (two-hand control),
- EN 999 (approach speeds of parts of the human body and positioning of safety devices).

The control station can be mounted:
- directly on the machine housing,
- on a pedestal, enabling 3 directional adjustment:
  - height,
  - rake,
  - skew.

The use of a two-hand control station in conjunction with a safety module type XPS BC or XPS BF provides type IIIC two-hand control conforming to EN 574, i.e. category 4 conforming to EN 954.

The two-hand control station + safety module XPS BC combination has an EC examination of type certificate issued by BERUFSGENOSSENSCHAFT of Germany (1996), n° 007052001181295.

The range comprises:
- two-hand control stations with or without pre-wired terminal blocks,
- kits (control station + pedestal), with or without pre-wired terminal blocks.

The products are supplied with an installation manual, which is also available as a separate item.

Safety dialogue solutions
Two-hand ergonomic control stations
With Harmony XB4 B control units

Description

The control station 1 has five cut-outs (Ø 22 mm) 2 as standard. Five additional cut-outs are possible 3.

Its pedestal 5 enables the following quick and simple adjustments:

- Control station rake (± 30°) using handle 4.
- Control station skew (± 180°) using handle 6.
- Control station height (835 to 1170 mm) using handle 6.
-

The baseplate 8 can be fitted with safety foot switches XPE R 9, together with their protective covers 7. See page 4/19.

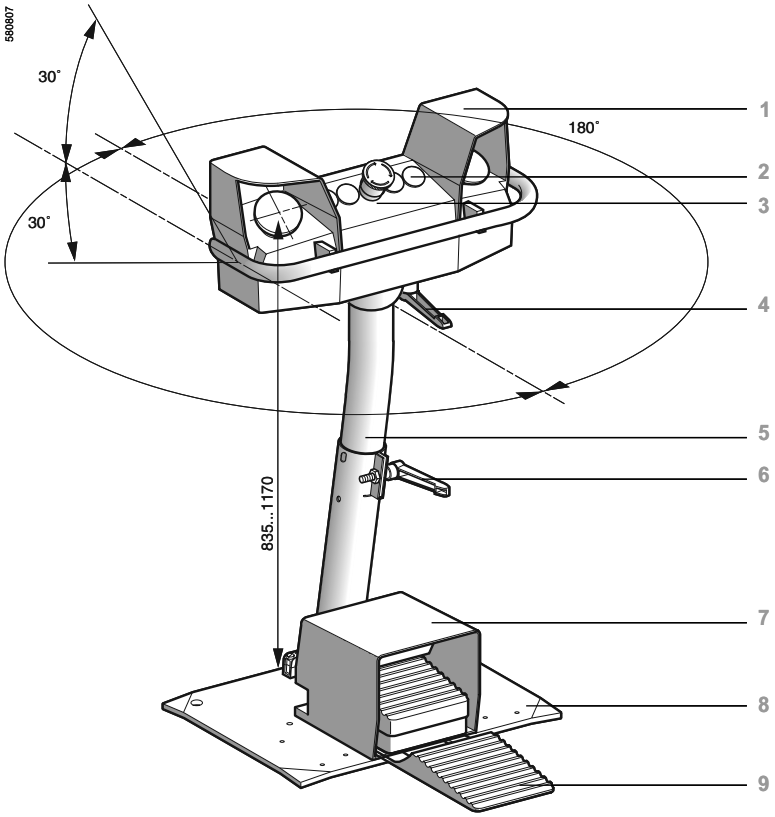

Safety dialogue solutions
Two-hand ergonomic control stations
With Harmony XB4 B control units

Characteristics

Environment

Conformity to standards			EN/IEC 60947-5-1, EN 574 ISO 13851		
Colour			Orange RAL 2008		
Protective treatment	Standard version		"TC"		
Ambient air temperature	For operation	**°C**	- 25…+ 70		
	For storage	**°C**	- 40…+ 70		
Vibration resistance	Conforming to EN/IEC 60068-2-6		5 gn (2…500 Hz)		
Shock resistance	Conforming to EN/IEC 60068-2-27		10 gn (duration 11 ms)		
Electric shock protection	Conforming to EN/IEC 61140		Class I		
Degree of protection	Conforming to EN/IEC 60529		IP 65		
Mechanical life	Number of operating cycles		1 million		
Cable entries			See dimensions, page 4/33		

Contact block characteristics

Rated operational characteristics	∼ AC-15		A600 or Ue = 240 V and Ie = 3 A		
	⎓ DC-13		Q600 or Ue = 250 V and Ie = 0.27 A conforming to EN/IEC 60947-5-1 Appendix A		
Rated insulation voltage	Conforming to EN/IEC 60947-1	**V**	Ui = 600, degree of pollution 3		
	Conforming to UL 508 and CSA C22-2 n° 14	**V**	Ui = 600		
Rated impulse withstand voltage	Conforming to EN/IEC 60947-1	**kV**	Uimp = 6		
Contact operation	Slow break, with positive opening operation		N/C + N/O break before make on each black actuator pushbutton N/C + N/C simultaneous on Emergency stop pushbutton N/C + N/O break before make on Lock out pushbutton		
Positive operation	Conforming to EN/IEC 60947-5-1 Appendix K		N/C contact with positive opening operation		
Terminal referencing			Conforming to CENELEC EN 50013		
Short-circuit protection	Conforming to EN/IEC 269		10 A cartridge fuse type gG (gl)		
Connection	Screw clamp terminals	**mm²**	Minimum clamping capacity: 1 x 0.22 or 1 x 0.22 + 1 x 0.34 Maximum clamping capacity: 1 x 2.5 or 2 x 1.5		
Electrical durability Conforming to EN/IEC 60947-5-1 Appendix C Operating rate: 3600 operating cycles/hour. Load factor: 0.5	a.c. supply for 1 million operating cycles utilisation category AC-15	**V**	24	120	230
		A	4	3	2
	d.c. supply for 1 million operating cycles utilisation category DC-13	**V**	24	110	
		A	0.5	0.2	
Electrical reliability	Failure rate According to EN/IEC 60947-5-4		At 17 V and 5 mA, $\lambda < 10^{-8}$ At 5 V and 1 mA, $\lambda < 10^{-6}$		

Safety dialogue solutions

Two-hand ergonomic control stations

With Harmony XB4 B control units

803051



XY2 SB7●

Two-hand control stations - painted

Description	Mushroom head		Reference	Weight kg
	Function and colour	Contacts		
2 control pushbuttons with N/C + N/O break before make contacts and 1 mushroom head pushbutton	Emergency stop Red	N/C + N/C slow break	**XY2 SB71**	4.000
	Lock out (Schaltsperre) Yellow	N/C + N/O break before make	**XY2 SB75**	4.000
2 control pushbuttons with N/C + N/O break before make contacts and 1 mushroom head pushbutton, with pre-wired terminal block	Emergency stop Red	N/C + N/C slow break	**XY2 SB72**	4.000
	Lock out (Schaltsperre) Yellow	N/C + N/O break before make	**XY2 SB76**	4.000

803052

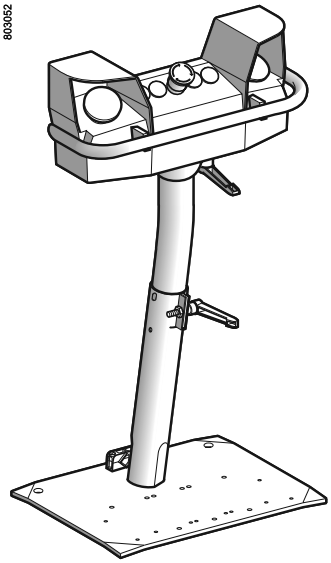

XY2 SB7●4

Kits (control station + pedestal)

Description	Mushroom head		Reference	Weight kg
	Function and colour	Contacts		
2 control pushbuttons and 1 mushroom head Emergency stop pushbutton + pedestal XY2 SB90	Emergency stop Red	N/C + N/C slow break	**XY2 SB714**	17.000
2 control pushbuttons and 1 mushroom head Emergency stop pushbutton, with pre-wired terminal block + pedestal XY2 SB90	Emergency stop Red	N/C + N/C slow break	**XY2 SB724**	17.000

Documentation

Description	For use with	Reference	Weight kg
Installation manual	All control stations XY2 SB7●●	**XCO M2514**	0.200

Safety dialogue solutions
Two-hand ergonomic control stations
With Harmony XB4 B control units

803059_1

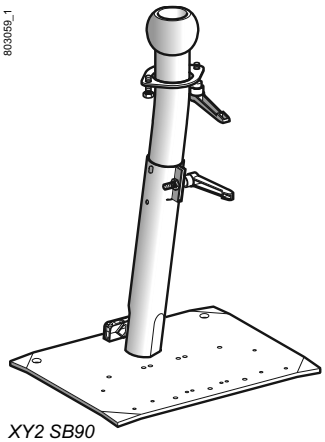

XY2 SB90

803057_1



XY2 SB98

803058_1

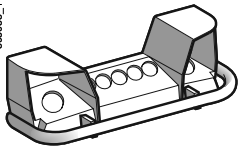

XY2 SB511

522964



XY2 SB99

803054_1



ZB4 BR216

803055_1



ZB4 BS844

503745



ZB4 BS845S

Separate components and spare parts

Various accessories

Description	For use with	Colour	Unit reference	Weight kg
Metal pedestal adjustable height	XY2 SB●●	Orange	**XY2 SB90**	13.000
Collar for guard rail (welded fixing)	XY2 SB90	Orange	**XY2 SB98**	0.800
Control station top without control devices	–	Orange	**XY2 SB511**	2.500
Control station base	–	Orange	**XY2 SB531**	1.200
Double protective metal cover	Metal pedestal XY2SB90 and foot switches type XPE R	Orange	**XY2 SB96**	4.370
Replacement handle (sold in lots of 5)	Metal pedestal XY2SB90	Black	**XY2 SB93**	0.155
Replacement seals	–	–	**XY2 SB99**	0.300
Adaptor (sold in lots of 5)	ISO M25	–	**DE9 RA2125**	0.010
Fixing nut (Sold in lots of 5)	Adaptor	–	**DE9 EC21**	0.005

Control units *(1)*

Description	Component part	Colour	Reference	Weight kg
Pushbutton actuator	Ø 60 mm mushroom head	Black	**ZB4 BR216**	0.095
	N/C + N/O body/contact assembly	–	**ZB4 BZ105**	0.055
Emergency stop pushbutton	Ø 40 mm mushroom head	Red	**ZB4 BS844**	0.060
	N/C + N/C body/contact assembly	–	**ZB4 BZ104**	0.055
Lock out pushbutton	Ø 40 mm mushroom head	Yellow, marked “Schaltsperre”	**ZB4 BS845S**	0.060
	N/C + N/O body/contact assembly	–	**ZB4 BZ105**	0.055

(1) Other XB4 B control and signalling units are suitable for use on the control stations. Please refer to our “Human Machine Interface” catalogue.

Presentation: page 4/28 | Description: page 4/29 | Characteristics: page 4/30 | Dimensions: page 4/33

Dimensions

Control station
XY2 SB7●

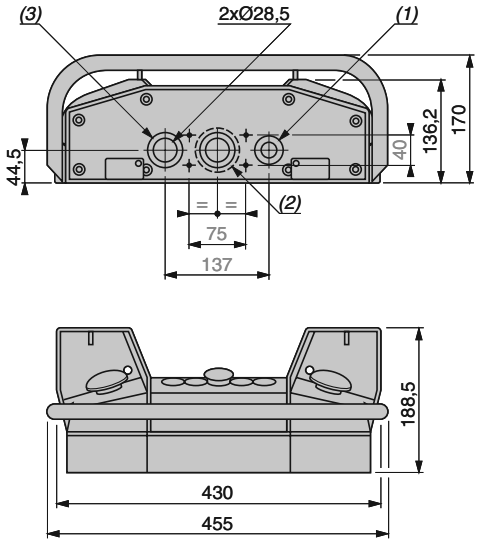

Pedestal
XY2 SB90

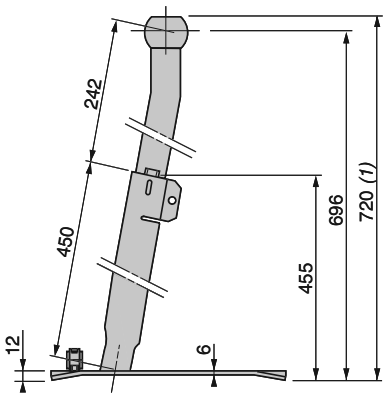

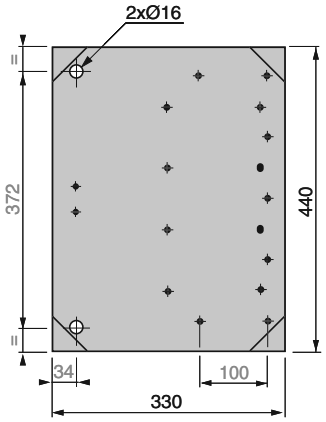

Double protective cover
XY2 SB96

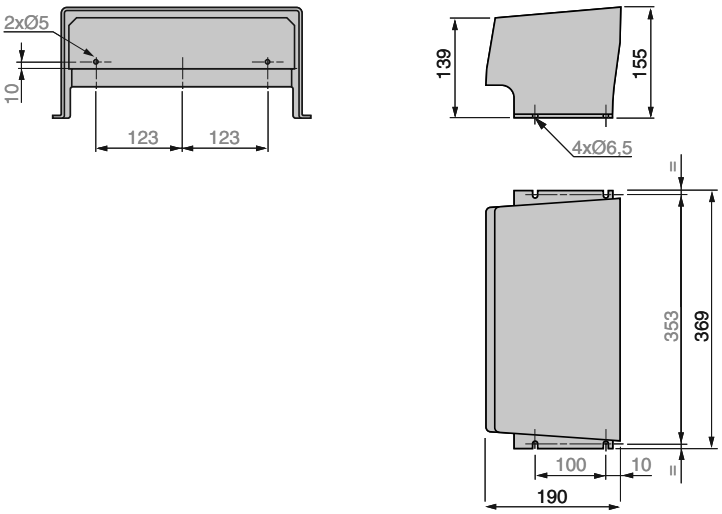

(1) 2 plain holes for n° 13 (Pg 13.5) or ISO M20 cable gland.
(2) Ø 56 mm knock-out specifically for mounting on pedestal.
(3) 1 plain hole for n° 21 (Pg 21) cable gland. For ISO M25, use adaptor DE9 RA2125 and fixing nut DE9 EC21.

(1) Adjustable height of pedestal 720 to 1060 mm.

Safety dialogue solutions

Harmony® XB4, metal
Emergency stop mushroom head pushbuttons
Ø 22 trigger action
Chromium plated metal bezel

Environment

Protective treatment	Standard version		"TH"
Ambient air temperature around the device	For storage	**°C**	- 40…+ 70
	For operation	**°C**	- 25…+ 70 unless otherwise stated
Electric shock protection	Conforming to IEC/EN 61140		Class I
Degree of protection	Conforming to IEC 60529		IP 66 unless otherwise stated
	Conforming to NEMA		NEMA 4X and 13, unless otherwise stated
Mechanical shock protection	Conforming to EN 50102		IK 03
Conformity to standards			IEC/EN 60947-1, IEC/EN 60947-5-1, IEC/EN 60947-5-4, IEC/EN 60947-5-5, EN/ISO 13850:2006 and IEC/EN 60204-1(trigger action and mechanical latching) JIS C 4520 UL 508, CSA C22-2 n° 14
Product certifications	UL Listed, CSA		Standard contact with screw clamp terminals: A600; Q600
	BV, RINA, LROS, DNV, GL		Standard contact with screw clamp terminals
Terminal referencing			Conforming to EN 50005 and EN 50013

Contact function and complete unit characteristics

Mechanical characteristics

Contact operation	N/C or N/O		Slow break
Positive operation	Conforming to IEC/EN 60947-5-1 Appendix K		All functions incorporating a N/C contact are positive opening operation
Operating force		**N**	Emergency stop with N/C + N/O: ■ Push-Pull: trigger action: 50 ■ Turn to release (with and without key unlocking): trigger action: 44
		N	Additional contact (extra to change state) ■ N/C contact: 2 ■ N/O contact: 2.3
Mechanical durability (in millions of operating cycles)	Emergency stop pushbutton		0.3
	Standard block only		5
Vibration resistance	Conforming to IEC 60068-2-6		Frequency: 2…500 Hz: 5 gn
Shock resistance	Conforming to IEC 60068-2-27		Half sine wave acceleration 11 ms: 10 gn

Electrical characteristics

Cabling capacity	Conforming to IEC 60947-1	**mm²**	Screw clamp terminals; cross head screws (Pozidriv type) Min.: 1 x 0.22 without cable end (1 x 0.34 for linking) Max.: 2 x 1.5 with cable end		
Contact material	Silver alloy (Ag/Ni)		Standard block with screw clamp terminals		
Short-circuit protection	Conforming to IEC/EN 60947-5-1	**A**	Standard block with screw clamp terminals: 10 (gG cartridge fuse conforming to IEC 60269-1)		
Rated insulation voltage	Conforming to IEC/EN 60947-1	**V**	Standard block with screw clamp terminals: Ui = 600, degree of pollution 3		
Rated impulse withstand voltage	Conforming to IEC/EN 60947-1	**kV**	Standard block with screw clamp terminals: Uimp = 6		
Rated operational characteristics Conforming to IEC/EN 60947-5-1	a.c. supply: utilisation category AC-15		Standard block with screw clamp terminals: A600: Ue = 600 V and Ie = 1.2 A or Ue = 240 V and Ie = 3 A or Ue = 120 V and Ie = 6 A		
	d.c. supply: utilisation category DC-13		Standard block with screw clamp terminals: Q600: Ue = 600 V and Ie = 0.1 A or Ue = 250 V and Ie = 0.27 A or Ue = 125 V and Ie = 0.55 A		
Electrical durability Conforming to IEC/EN 60947-5-1 Appendix C Operating rate: 3600 operating cycles/hour Load factor: 0.5	a.c. supply for 1 million operating cycles utilisation category AC-15		Standard block with screw clamp terminals:		
		V	24	120	230
		A	4	3	2
	d.c. supply for 1 million operating cycles utilisation category DC-13		Standard block with screw clamp terminals:		
		V	24	110	
		A	0.5	0.2	
Electrical reliability	Failure rate (according to IEC/EN 60947-5-4)		Standard block in clean environment: ■ At 17 V and 5 mA, $\lambda < 10^{-8}$ ■ At 5 V and 1 mA, $\lambda < 10^{-6}$		

References: page 4/35
Dimensions: page4/37

Safety dialogue solutions

Harmony® XB4, metal

Emergency stop mushroom head pushbuttons
Ø 22 trigger action
Chromium plated metal bezel



XB4 BT845



XB4 BS8445



XB4 BS9445

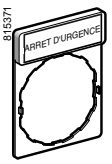

ZBY 2130



ZBY ●330

Emergency stop mushroom head pushbuttons (colour: red)

Screw clamp terminal connections

Shape of head	Type of push	Type of contact N/O	Type of contact N/C	Reference	Weight kg
	Trigger action Push-pull Ø 40	1	1	**XB4 BT845** (ZB4 BZ105 + ZB4 BT84)	0.136
	Trigger action Turn to release Ø 40	1	1	**XB4 BS8445** (ZB4 BZ105 + ZB4 BS844)	0.130
	Trigger action Key release (n° 455) Ø 40	1	1	**XB4 BS9445** (ZB4 BZ105 + ZB4 BS944)	0.170

Legend holder, 30 x 40 mm

Description	White marking on red background	Reference	Weight kg
With 8 x 27 mm legend	EMERGENCY STOP	**ZBY 2330**	0.002
	ARRET D'URGENCE	**ZBY 2130**	0.002
	NOT-AUS	**ZBY 2230**	0.002

Circular legends

Diameter	Marking, on yellow background	Reference	Weight
mm			**kg**
60	EMERGENCY STOP	**ZBY 9330**	0.004
	ARRET D'URGENCE	**ZBY 9130**	0.004
	NOT-AUS	**ZBY 9230**	0.004
90	EMERGENCY STOP	**ZBY 8330**	0.008
	ARRET D'URGENCE	**ZBY 8130**	0.008
	NOT-AUS	**ZBY 8230**	0.008

4

Characteristics: page 4/34
Dimensions: page 4/37

Safety dialogue solutions

Harmony® XB4, metal

Emergency stop mushroom head pushbuttons
Ø 22 trigger action
Chromium plated metal bezel



ZB4 BZ102



ZB4 BT84



ZB4 BS834



ZB4 BS934

ZB4 B sub-assemblies for user assembly: bodies + heads

Complete bodies (fixing collar + single contact block)

Description	Type of contact N/O	Type of contact N/C	Reference	Weight
				kg
Screw clamp terminal connections	–	1	**ZB4 BZ102**	0.053
	–	2	**ZB4 BZ104**	0.062
	1	1	**ZB4 BZ105**	0.062
	1	2	**ZB4 BZ141**	0.072

Mushroom heads for latching pushbuttons (Emergency stop: red)

Shape of head	Type of push	Push Ø mm	Colour	Reference		Weight
						kg
	Trigger action Push-pull *(2)*	40	Red	**ZB4 BT84**		0.077
	Trigger action Turn to release *(2)*	30	Red	**ZB4 BS834**		0.068
		40	Red	**ZB4 BS844**		0.073
	Trigger action Key release (n° 455) *(2)*	30	Red	**ZB4 BS934**		0.094
		40	Red	**ZB4 BS944**	*(1)*	0.098
		60	Red	**ZB4 BS964**		0.118

(1) Other key numbers:
*Key n° 421E: add the suffix **12** to the reference.*
*Key n° 458A: add the suffix **10** to the reference.*
*Key n° 520E: add the suffix **14** to the reference.*
*Key n° 3131A: add the suffix **20** to the reference.*
*Example: the reference for a Ø 40 red mushroom head for a trigger action latching pushbutton with release by key n° 421E becomes: **ZB4 BS94412**.*
(2) Maximum number of contact blocks fitted to associated body: 4.

Characteristics: page 4/34
Dimensions: page4/37

Safety dialogue solutions

Harmony® XB4, metal

Emergency stop mushroom head pushbuttons
Ø 22 trigger action
Chromium plated metal bezel

Emergency stop mushroom head pushbuttons (complete units)

XB4 BT845

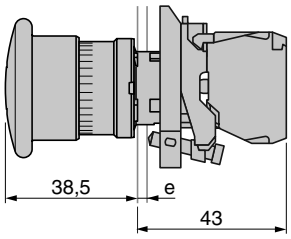

XB4 BS8445

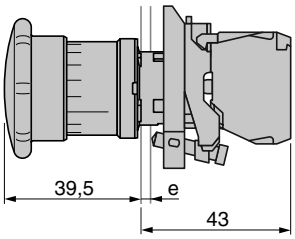

XB4 BS9445

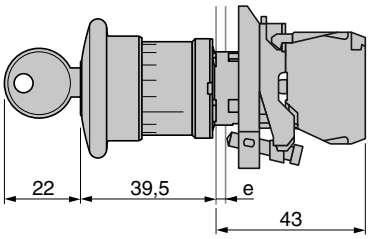

Common face view

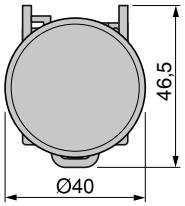

e: support panel thickness 1 to 6 mm.

Heads for latching mushroom head pushbuttons

Push-pull
ZB4 BT84

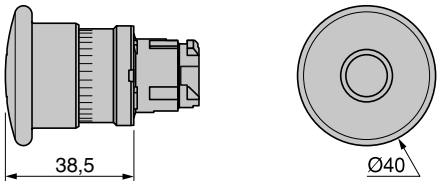

Turn to release
ZB4 BS834

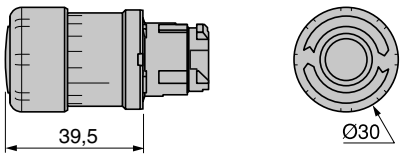

ZB4 BS844

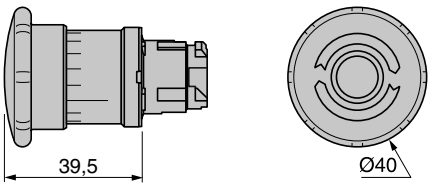

Key release
ZB4 BS934

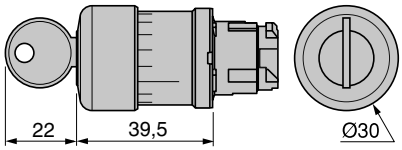

ZB4 BS944, BS964

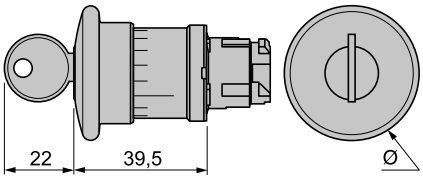

ZB4	Ø
BS944	40
BS964	60

Bodies for pushbuttons, screw clamp terminal connections

ZB4 BZ10●, BZ141

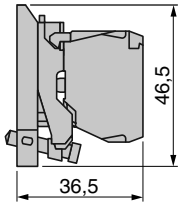

Panel cut-out and mounting centres

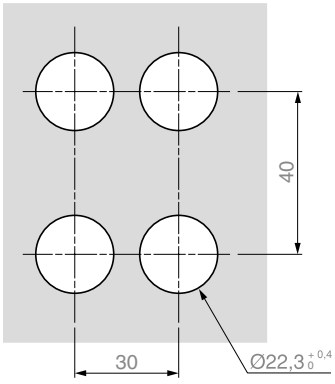

Characteristics: page 4/34
References: page 4/35

Safety dialogue solutions

Harmony® XB5, plastic
Emergency stop mushroom head pushbuttons
Ø 22 trigger action
Plastic bezel

Environment

Protective treatment	Standard version		"TH"
Ambient air temperature around the device	For storage	**°C**	- 40…+ 70
	For operation	**°C**	- 25…+ 70 unless otherwise stated
Electric shock protection	Conforming to IEC/EN 61140		Class II
Degree of protection	Conforming to IEC 60529		IP 66
	Conforming to NEMA		NEMA 4X and 13, unless otherwise stated
Mechanical shock protection	Conforming to EN 50102		IK 03
Conformity to standards			IEC/EN 60947-1, IEC/EN 60947-5-1, IEC/EN 60947-5-4, IEC/EN 60947-5-5, EN/ISO 13850:2006 and IEC/EN 60204-1(trigger action and mechanical latching) JIS C 4520 UL 508, CSA C22-2 n° 14
Product certifications	UL Listed, CSA		Standard contact with screw clamp terminals: A600; Q600
	BV, RINA, LROS, DNV, GL		Standard contact with screw clamp terminals
Terminal referencing			Conforming to EN 50005 and EN 50013

Contact function and complete unit characteristics

Mechanical characteristics

Contact operation	N/C or N/O		Slow break
Positive operation	Conforming to IEC/EN 60947-5-1 Appendix K		All functions incorporating a N/C contact are positive opening operation
Operating force		**N**	Emergency stop with N/C + N/O: ■ Push-Pull: trigger action: 50 ■ Turn to release (with and without key unlocking): trigger action: 44
		N	Additional contact (extra to change state) ■ N/C contact: 2 ■ N/O contact: 2.3
Mechanical durability (in millions of operating cycles)	Emergency stop pushbutton		0.3
	Standard block only		5
Vibration resistance	Conforming to IEC 60068-2-6		Frequency: 2…500 Hz: 5 gn
Shock resistance	Conforming to IEC 60068-2-27		Half sine wave acceleration 11 ms: 10 gn

Electrical characteristics

Cabling capacity	Conforming to IEC 60947-1	**mm²**	Screw clamp terminals; cross head screws (Pozidriv type) Min.: 1 x 0.22 without cable end (1 x 0.34 for linking) Max.: 2 x 1.5 with cable end		
Contact material	Silver alloy (Ag/Ni)		Standard block with screw clamp terminals		
Short-circuit protection	Conforming to IEC/EN 60947-5-1	**A**	Standard block with screw clamp terminals: 10 (gG cartridge fuse conforming to IEC 60269-1)		
Rated insulation voltage	Conforming to IEC/EN 60947-1	**V**	Standard block with screw clamp terminals: Ui = 600, degree of pollution 3		
Rated impulse withstand voltage	Conforming to IEC/EN 60947-1	**kV**	Standard block with screw clamp terminals: Uimp = 6		
Rated operational characteristics Conforming to IEC/EN 60947-5-1	a.c. supply: utilisation category AC-15		Standard block with screw clamp terminals: A600: Ue = 600 V and Ie = 1.2 A or Ue = 240 V and Ie = 3 A or Ue = 120 V and Ie = 6 A		
	d.c. supply: utilisation category DC-13		Standard block with screw clamp terminals: Q600: Ue = 600 V and Ie = 0.1 A or Ue = 250 V and Ie = 0.27 A or Ue = 125 V and Ie = 0.55 A		
Electrical durability Conforming to IEC/EN 60947-5-1 Appendix C Operating rate: 3600 operating cycles/hour Load factor: 0.5	a.c. supply for 1 million operating cycles utilisation category AC-15		Standard block with screw clamp terminals:		
		V	24	120	230
		A	4	3	2
	d.c. supply for 1 million operating cycles utilisation category DC-13		Standard block with screw clamp terminals:		
		V	24	110	
		A	0.5	0.2	
Electrical reliability	Failure rate (according to IEC/EN 60947-5-4)		Standard block in clean environment: ■ At 17 V and 5 mA, $\lambda < 10^{-8}$ ■ At 5 V and 1 mA, $\lambda < 10^{-6}$		

References: page 4/39
Dimensions: page 4/41

Safety dialogue solutions

Harmony® XB5, plastic

Emergency stop mushroom head pushbuttons
Ø 22 trigger action
Plastic bezel



XB5 AT845



XB5 AS8445



XB5 AS9445

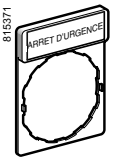

ZBY 2130



ZBY ●330

Emergency stop mushroom head pushbuttons (colour: red)

Screw clamp terminal connections

Shape of head	Type of push	Type of contact N/O	Type of contact N/C	Reference	Weight kg
	Trigger action Push-pull Ø 40	1	1	**XB5 AT845** (ZB5 AZ105 + ZB5 AT84)	0.076
	Trigger action Turn to release Ø 40	1	1	**XB5 AS8445** (ZB5 AZ105 + ZB5 AS844)	0.072
	Trigger action Key release (n° 455) Ø 40	1	1	**XB5 AS9445** (ZB5 AZ105 + ZB5 AS944)	0.112

Legend holder, 30 x 40 mm

Description	White marking on red background	Reference	Weight kg
With 8 x 27 mm legend	EMERGENCY STOP	**ZBY 2330**	0.002
	ARRET D'URGENCE	**ZBY 2130**	0.002
	NOT-AUS	**ZBY 2230**	0.002

Circular legends

Diameter	Marking, on yellow background	Reference	Weight
mm			kg
60	EMERGENCY STOP	**ZBY 9330**	0.004
	ARRET D'URGENCE	**ZBY 9130**	0.004
	NOT-AUS	**ZBY 9230**	0.004
90	EMERGENCY STOP	**ZBY 8330**	0.008
	ARRET D'URGENCE	**ZBY 8130**	0.008
	NOT-AUS	**ZBY 8230**	0.008

Characteristics: page 4/38
Dimensions: page 4/41

Safety dialogue solutions

Harmony® XB5, plastic

Emergency stop mushroom head pushbuttons
Ø 22 trigger action
Plastic bezel



ZB5 AZ102



ZB5 AT84



ZB5 AS844



ZB5 AS934

ZB5 B sub-assemblies for user assembly: bodies + heads

Complete bodies (fixing collar + single contact block)

Description	Type of contact N/O	Type of contact N/C	Reference	Weight
				kg
Screw clamp terminal connections	–	1	**ZB5 AZ102**	0.021
	–	2	**ZB5 AZ104**	0.030
	1	1	**ZB5 AZ105**	0.030
	1	2	**ZB5 AZ141**	0.040

Mushroom heads for latching pushbuttons (Emergency stop: red)

Shape of head	Type of push	Push Ø	Push Colour	Reference		Weight
		mm				kg
	Trigger action Push-pull *(2)*	40	Red	**ZB5 AT84**		0.050
	Trigger action Turn to release *(2)*	30	Red	**ZB5 AS834**		0.042
		40	Red	**ZB5 AS844**		0.046
	Trigger action Key release (n° 455) *(2)*	30	Red	**ZB5 AS934**		0.068
		40	Red	**ZB5 AS944**	*(1)*	0.071
		60	Red	**ZB5 AS964**		0.092
	Trigger action Key release (n° 4A185) *(2)*	40	Red	**ZB5 AS944D**		0.071

(1) Other key numbers:
*Key n° 421E: add the suffix **12** to the reference.*
*Key n° 458A: add the suffix **10** to the reference.*
*Key n° 520E: add the suffix **14** to the reference.*
*Key n° 3131A: add the suffix **20** to the reference.*
*Example: the reference for a Ø 40 red mushroom head for a trigger action latching pushbutton with release by key n° 421E becomes: **ZB5 AS94412**.*
(2) Maximum number of contact blocks fitted to associated body: 4.

Characteristics: page 4/38
Dimensions: page 4/41

Safety dialogue solutions

Harmony® XB5, plastic

Emergency stop mushroom head pushbuttons
Ø 22 trigger action
Plastic bezel

Emergency stop mushroom head pushbuttons (complete units)

XB5 AT845

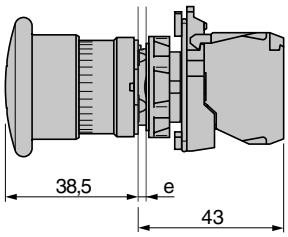

XB5 AS8445

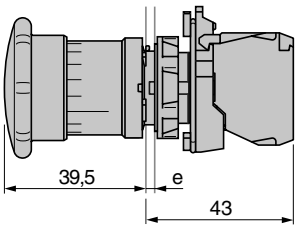

XB5 AS9445

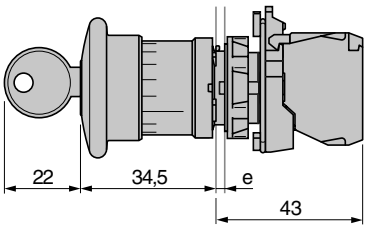

Common face view

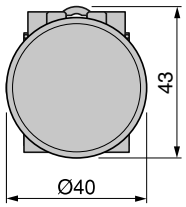

e: support panel thickness 1 to 6 mm.

Heads for latching mushroom head pushbuttons

Push-Pull
ZB5 AT84

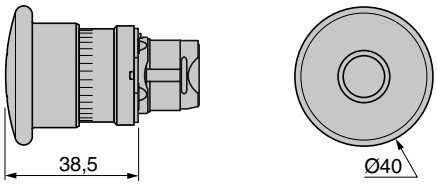

Turn to release
ZB5 AS834

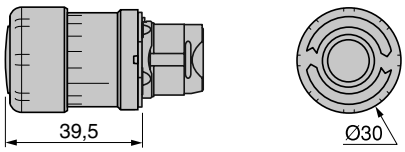

ZB5 AS844

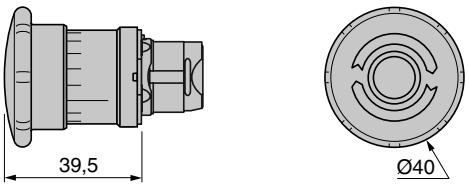

Key release
ZB5 AS934

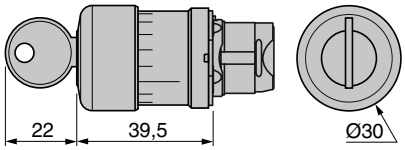

ZB5 AS944, AS964

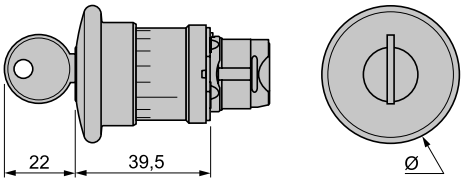

ZB5	Ø
AS944	40
AS964	60

ZB5 AS944D

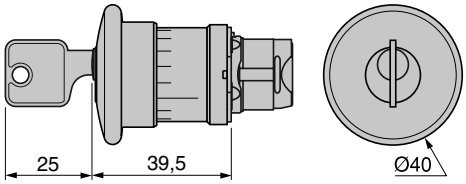

Bodies for pushbuttons, screw clamp terminal connections

ZB5 AZ10●, AZ141

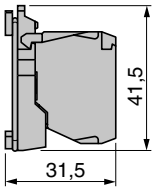

Panel cut-out and mounting centres

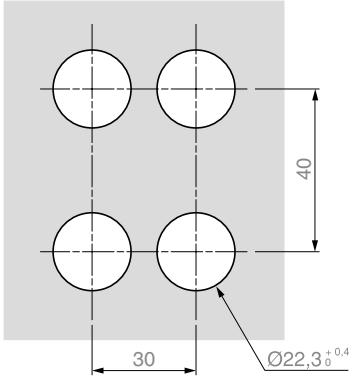

Characteristics: page 4/38
References: page 4/39

Safety dialogue solutions
XAL control stations for Ø 22 trigger action
Emergency stop mushroom head pushbuttons

Environment

Protective treatment	Standard version		"TH"
Ambient air temperature around the device	For storage	**°C**	- 40…+ 70
	For operation	**°C**	- 25…+ 70 unless otherwise stated
Electric shock protection	Conforming to IEC/EN 61140		Class II
Degree of protection	Conforming to IEC 60529		IP 66
	Conforming to NEMA		NEMA 4X and 13
Mechanical shock protection	Conforming to EN 50102		IK 03
Conformity to standards			IEC/EN 60947-1, IEC/EN 60947-5-1, IEC/EN 60947-5-4, IEC/EN 60947-5-5, EN/ISO 13850:2006 and IEC/EN 60204-1(trigger action and mechanical latching) JIS C 4520 UL 508, CSA C22-2 n° 14
Product certifications	UL Listed, CSA		Standard contact with screw clamp terminals: A600; Q600
Terminal referencing			Conforming to EN 50005 and EN 50013
Material and colours			Polycarbonate, yellow RAL 1012 lid and light grey RAL 7035 base
Cable entries			Knock-out entries for n° 13 (CM12, Pg 13.5) cable gland and tapped ISO 20

Contact function characteristics

Mechanical characteristics

Contact operation	N/C or N/O		Slow break
Positive operation	Conforming to IEC/EN 60947-5-1 Appendix K		All functions incorporating a N/C contact are positive opening operation
Operating force		**N**	Emergency stop with N/C + N/O: ■ Push-Pull: trigger action: 50 ■ Turn to release (with and without key unlocking): trigger action: 44
		N	Additional contact (extra to change state) ■ N/C contact: 2 ■ N/O contact: 2.3
Mechanical durability (in millions of operating cycles)			0.1
Vibration resistance	Conforming to IEC 60068-2-6		Frequency: 2…500 Hz: 5 gn
Shock resistance	Conforming to IEC 60068-2-27		Half sine wave acceleration 11 ms: 10 gn

Electrical characteristics

Cabling capacity	Conforming to IEC 60947-1	**mm²**	Screw clamp terminals; cross head screws (Pozidriv type) Min.: 1 x 0.22 without cable end (1 x 0.34 for linking) Max.: 2 x 1.5 with cable end		
Contact material	Silver alloy (Ag/Ni)		Standard block with screw clamp terminals		
Short-circuit protection	Conforming to IEC/EN 60947-5-1	**A**	Standard block with screw clamp terminals: 10 (gG cartridge fuse conforming to IEC 269-1)		
Rated insulation voltage	Conforming to IEC/EN 60947-1	**V**	Standard block with screw clamp terminals: Ui = 600, degree of pollution 3		
Rated impulse withstand voltage	Conforming to IEC/EN 60947-1	**kV**	Standard block with screw clamp terminals: Uimp = 6		
Rated operational characteristics Conforming to IEC/EN 60947-5-1	a.c. supply: utilisation category AC-15		A600: Ue = 600 V and Ie = 1.2 A or Ue = 240 V and Ie = 3 A or Ue = 120 V and Ie = 6 A		
	d.c. supply: utilisation category DC-13		Q600: Ue = 600 V and Ie = 0.1 A or Ue = 250 V and Ie = 0.27 A or Ue = 125 V and Ie = 0.55 A		
Electrical durability Conforming to IEC/EN 60947-5-1 Appendix C Operating rate: 3600 operating cycles/hour Load factor: 0.5	a.c. supply for 1 million operating cycles utilisation category AC-15		Standard block with screw clamp terminals:		
		V	24	120	230
		A	4	3	2
	d.c. supply for 1 million operating cycles utilisation category DC-13		Standard block with screw clamp terminals:		
		V	24	110	
		A	0.4	0.15	
Electrical reliability	Failure rate (according to IEC/EN 60947-5-4)		Standard block in clean environment: ■ At 17 V and 5 mA, $\lambda < 10^{-8}$ ■ At 5 V and 1 mA, $\lambda < 10^{-6}$		

References: page 4/43
Dimensions: page 4/45

Safety dialogue solutions

XAL control stations for Ø 22 trigger action
Emergency stop mushroom head pushbuttons
Complete stations (screw clamp terminal connections)



XAL K178●



XAL K188●

Emergency stop function
(yellow lid "RAL 1012", light grey base "RAL 7035")

Description	Type	Type of contact N/O	Type of contact N/C	Reference	Weight kg
Without marking					
1 mushroom head pushbutton Ø 40 mm, red Turn to release	Trigger action	–	2	**XAL K178F**	0.194
		1	1	**XAL K178E**	0.194
		1	2	**XAL K178G**	0.194
1 mushroom head pushbutton Ø 40 mm, red Key release (n° 455)	Trigger action	–	2	**XAL K188F**	0.188
		1	1	**XAL K188E**	0.188
		1	2	**XAL K188G**	0.188

4

Characteristics: page 4/42
Dimensions: page 4/45

Safety dialogue solutions

XAL control stations for Ø 22 trigger action Emergency stop mushroom head pushbuttons

Separate components for user assembly



ZEN L1111



ZB5 AS844



ZB5 AS934

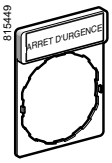

ZBY 2130

Empty enclosures

Description	Number of cut-outs	Reference	Weight kg
For normal environments (with stainless steel lid fixing screws)			
Yellow lid "RAL 1012" Light grey base "RAL 7035"	1	**XAL K01**	0.136
For normal environments, CSA + UL certifications *(1)* (with stainless steel lid fixing screws)			
Yellow lid "RAL 1012" Light grey base "RAL 7035"	1	**XAL K01H7**	0.136

Electrical blocks (for mounting on metal plate at back of enclosure)

Description	Type	Sold in lots of	Unit reference	Weight kg
Electrical blocks with screw clamp terminal connections				
Standard contact blocks *(2)*	N/O contact	5	**ZEN L1111**	0.015
	N/C contact	5	**ZEN L1121**	0.015

Mushroom heads for Emergency stop pushbuttons

Shape of head	Type of push	Push Ø mm	Colour	Reference		Weight kg
Trigger action latching mushroom heads						
	Push-pull	40	Red	**ZB5 AT84**		0.050
	Turn to release	30	Red	**ZB5 AS834**		0.042
		40	Red	**ZB5 AS844**		0.046
	Key release (n° 455)	30	Red	**ZB5 AS934**		0.068
		40	Red	**ZB5 AS944**	*(3)*	0.071
		60	Red	**ZB5 AS964**		0.092
	Key release (n° 4A185)	40	Red	**ZB5 AS944D**		0.071

Legend holder

Description	White marking on red background	Reference	Weight kg
Legend holder 30 x 40 mm with 8 x 27 mm legend	EMERGENCY STOP	**ZBY 2130**	0.002
	ARRET D'URGENCE	**ZBY 2113**	0.002
	NOT-AUS	**ZBY 2230**	0.002

(1) Volt-free commoning/earth terminal included.
(2) A maximum of 3 electrical blocks can be fitted per associated head.
(3) Other key numbers:
*Key n° 421E: add the suffix **12** to the reference.*
*Key n° 458A: add the suffix **10** to the reference.*
*Key n° 520E: add the suffix **14** to the reference.*
*Key n° 3131A: add the suffix **20** to the reference.*
*Example: the reference for a Ø 40 red mushroom head for a trigger action latching pushbutton with release by key n° 421E becomes: **ZB5 AS94412**.*

Characteristics: page 4/42
Dimensions: page 4/45

Safety dialogue solutions

XAL control stations for Ø 22 trigger action
Emergency stop mushroom head pushbuttons
Separate components for user assembly

Single-way control stations XAL K

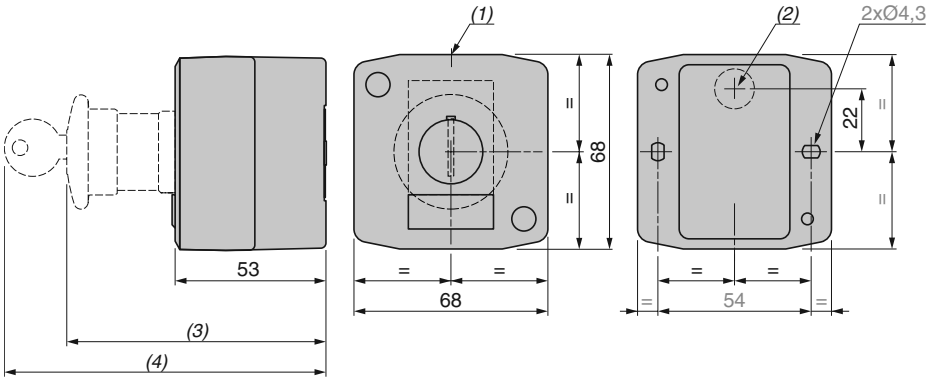

(1) Knock-out entry for n° 13 cable gland.
(2) 2 knock-outs for cable entry.
(3) 91 mm for latching mushroom head pushbuttons.
(4) 113 mm for latching mushroom head pushbuttons with key release.

Characteristics:
page 4/42

Safety dialogue solutions

Beacons and indicator banks Ø 70 mm
Harmony type XVB Universal

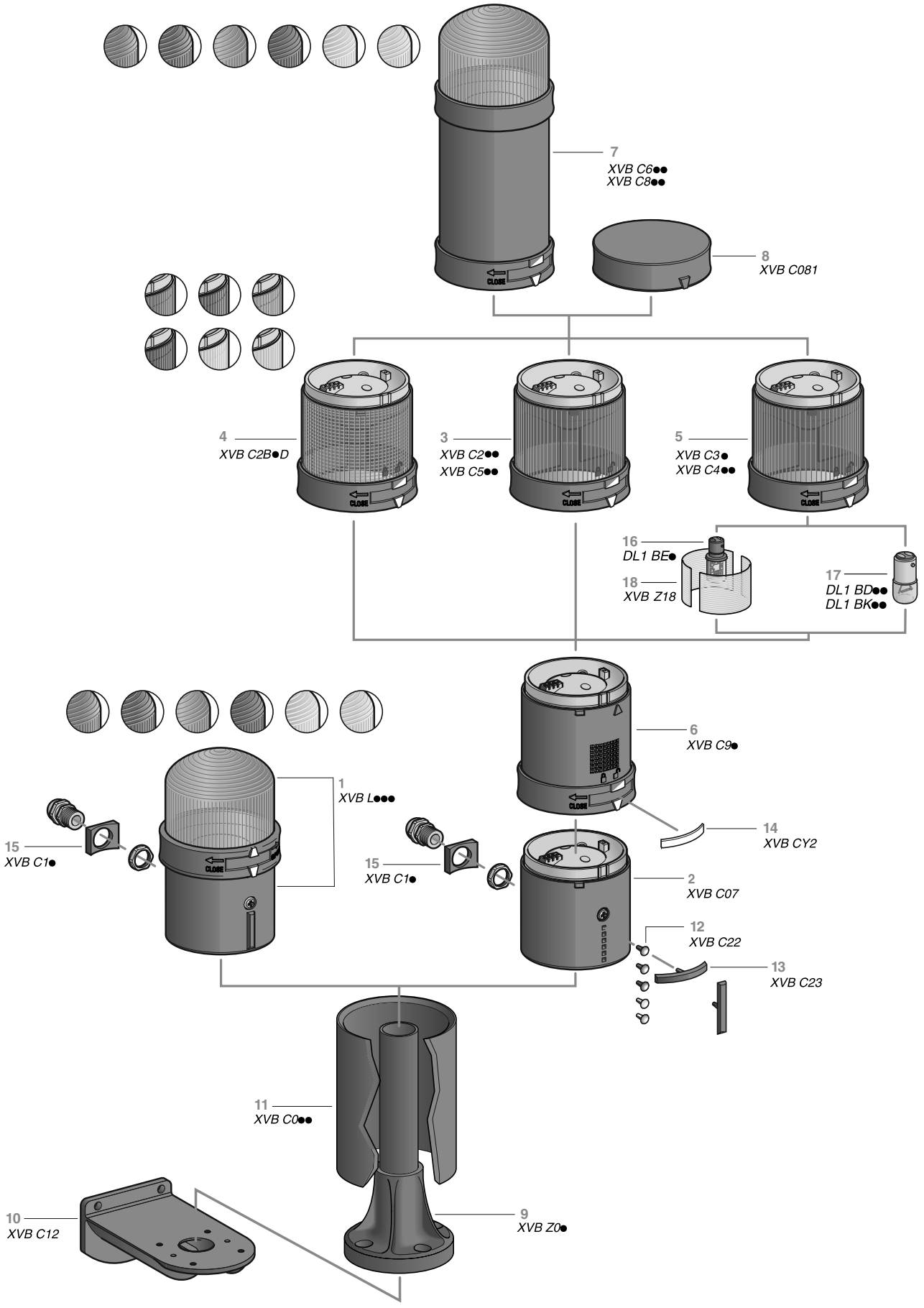

Safety dialogue solutions
Beacons and indicator banks Ø 70 mm
Harmony type XVB Universal

Beacons and indicator banks type XVB are visual or audible signalling units used for indicating, throughout 360° and at a distance, the various states or operation sequences of a machine or installation. Examples: start, stop machine, no material, call technical staff, fault signalling, etc.

Illuminated beacon

Complete product XVB L

Ready assembled 1 with a single illuminated signalling unit:
- □ steady light (with incandescent bulb or LED),
- □ flashing light (with incandescent bulb or LED),
- □ or "flash" (with discharge tube).

The **XVB L** beacon comprises:
- ■ A base unit with a removable terminal block and bottom or side cable entry.
- ■ One coloured illuminated unit (green, red, orange, blue, clear or yellow).

Indicator bank

Customer assembled product XVB C

Variable composition assembly of 1 to 5 illuminated or audible units which are supplied as separate items (assembly by user). Maximum configuration: 5 units or 4 units + 1 "flash" unit.

The indicator bank **XVB C** comprises:
- ■ A base unit with a removable terminal block and bottom or side cable entry 2.
- ■ 1 to 5 coloured illuminated units (green, red, orange, blue, clear or yellow):
- □ with integral LED 3,
- □ with integral LED and diffuser 4 *(1)*,
- □ for incandescent bulbs or base mounted LEDs 5.
- ■ 1 or 2 audible units 6.
- ■ A maximum of 1 "flash" discharge unit (5 Joule or 10 Joule) 7, for mounting on top of the bank.
- ■ A top cover 8 (except when using a "flash" discharge tube).

- ■ The illuminated or audible units stack vertically and are easily locked and unlocked using an integral clamping ring. Electrical connections between each unit are made automatically.
- ■ A light diffuser, pre-fitted in illuminated units XVB C2B●D with a base mounted LED, distributes the light evenly over the lens surface. When using the indicator banks in bright ambient light conditions, remove the diffuser to improve contrast.
- ■ Connection on the AS-Interface cabling system is possible by ordering a dedicated base unit. Please refer to our "Industrial communication in machines and installations" catalogue.

Accessories

For beacons XVB L and indicator banks XVB C

- ■ Fixing base comprising a support tube glued into a plastic fixing plate, for a height beneath the base unit of 80, 380 or 780 mm 9.
- ■ Fixing plate for mounting on vertical support 10.
- ■ Support tube concealment cover, height 100, 400 or 800 mm 11.
- ■ Coloured markers 12 (2).
- ■ Legend holder with legend 13 (2).
- ■ Legends that attach to locking ring of each signalling unit for identification 14.
- ■ Adaptor and 13P cable gland 15.
- ■ Base mounted LED 16 or incandescent bulb 17.
- ■ Diffuser 18 *(1)*.

Installation

Mounting

- ■ Base unit fixed directly onto panel using 2 screws.
- ■ Fixed using a fixing base comprising an aluminium support tube glued into a plastic fixing plate.

Cabling

By means of removable terminal block incorporated in base unit (simplified wiring). The screw and captive cable clamp terminals are protected to prevent any accidental contact with live parts.

(1) The diffuser can only be used with LED illuminated units. Not compatible with units fitted with an incandescent bulb or "flash" discharge tube.
(2) These enable the position of the various units (illuminated or audible) to be identified in the event of dismantling the bank.

Characteristics: page 4/48 | References: page 4/50 | Dimensions: page 4/58

Safety dialogue solutions
Beacons and indicator banks Ø 70 mm
Harmony type XVB Universal

Environment characteristics

Product certifications	Standard version		CSA C22-2 n°14, UL 508, CCC, GOST
Conformity to standards			EN/IEC 60947-5-1
Protective treatment	Standard version		"TC"
Ambient air temperature	For storage	**°C**	- 40…+ 70
	For operation *(1)*	**°C**	**Illuminated units with steady light signalling:** - 25…+ 70, with 7 W incandescent bulb - 25…+ 50, with LED
		°C	**Illuminated units with flashing light signalling:** - 25…+ 50, with 7 W incandescent bulb - 25…+ 50, with LED
		°C	**Illuminated units with "flash" discharge tube:** - 25…+ 50
		°C	**Audible units:** - 25…+ 50, with buzzer
Electric shock protection Conforming to IEC 61140	Mounted on support tube		Class I
	Mounted on base unit		Class II
Degree of protection	Conforming to IEC 60529		IP 65 (mounted on fixing base XVB Z0●) IP 66 (mounted directly on base unit)
	Conforming to UL 508		Type 4X NEMA "Indoor"
Material	Illuminated units		Polycarbonate
	Base unit and cover		Glass-reinforced polyamide and polycarbonate
	Support tube		Painted aluminium
	Fixing plate for use on vertical support		Zamak
	Fixing plate for use on horizontal support		Polyamide 66
	Support tube concealment cover		ABS

(1) Warning: illuminated units with incandescent bulbs must not be combined with LED illuminated units, due to the risk of overheating.
Also, when different units (e.g. steady, flashing…) are combined, the maximum temperature is limited to that of the weaker unit.

4

General: page 4/46 References: page 4/50 Dimensions: page 4/58

Electrical characteristics

Rated insulation voltage (Ui)	Conforming to IEC 60947-1	**V**	250
Voltage limits	Conforming to IEC 60947-5-1	**V**	0.85 to 1.10 Un (Un: nominal voltage)
Consumption	LED units	**mA**	**Steady light signalling:** ⎓ 24 V: < 47 ∼ 120 V: < 17 ∼ 230 V: < 17
		mA	**Flashing light signalling:** ⎓ 24 V: < 47 ∼ 120 V: < 17 ∼ 230 V: < 17
	Units with discharge tube *(1)*	**mA**	**Flashing light signalling:** ∼ 24 V: 5 J unit: < 550; 10 J unit: < 1 300 ⎓ 24 V: 5 J unit: < 350; 10 J unit: < 850 ∼ 48 V: 10 J unit: < 650 ⎓ 48 V: 10 J unit: < 400 ∼ 120 V: 5 J unit: < 140; 10 J unit: < 290 ∼ 230 V: 5 J unit: < 105; 10 J unit: < 280
	Audible units	**mA**	⎓ 12…48 V: < 15 ∼ 120…230 V: < 25
Rated impulse withstand voltage	Conforming to IEC 60947-1	**kV**	U imp = 4
Light source	Illuminated units with steady or flashing light signalling		LEDs: degree of pollution 2 Bulbs with BA 15d base fitting, maximum power 7 W
Illuminating power	Units with discharge tube	**cds**	13 (integral high intensity tube) with clear lens unit: 5 J tube 26 (integral high intensity tube) with clear lens unit: 10 J tube
Audible unit	Continuous or intermittent tone	**dB**	90 at 1 m
	Fundamental frequency	**kHz**	2.8
Terminal referencing			1 terminal referenced “C” common to all 5 units
			1 or 5 terminals referenced 1 to 5, depending on number of units
Connection	Maximum clamping capacity on protected, ready-to-tighten, screw and captive cable clamp terminals	**mm²**	1 x 1.5 with cable end
Frequency of illuminated units	Illuminated units with flashing light signalling	**Hz**	1
	Illuminated units with discharge tube	**Hz**	1

(1) ***Warning****: illuminated units with a “flash” discharge tube are not suitable for steady light signalling due to the heat generated.*

General: page 4/46 References: page 4/50 Dimensions: page 4/58

Safety dialogue solutions

Illuminated beacons Ø 70 mm
Harmony type XVB L Universal
Complete beacons for incandescent bulbs or LEDs (BA 15d base fitting)



XVB L3●



XVB L4B●

Beacons with steady light signalling

Description	Light source, to be ordered separately *(1)*	Colour	Reference	Weight kg
Complete unit comprising: - 1 illuminated unit - 1 base unit (direct or tube fixing)	Incandescent bulb 7 W max. 250 V max.	Green	**XVB L33**	0.260
		Red	**XVB L34**	0.260
		Orange	**XVB L35**	0.260
		Blue	**XVB L36**	0.260
		Clear	**XVB L37**	0.260
		Yellow	**XVB L38**	0.260

Beacons with integral flashing light signalling

Description	Light source, to be ordered separately *(1)*	Colour	Reference	Weight kg
Complete unit comprising: - 1 illuminated unit - 1 base unit (direct or tube fixing)	Incandescent bulb 7 W max. ~ 24 V ⎓ 24…48 V	Green	**XVB L4B3**	0.280
		Red	**XVB L4B4**	0.280
		Orange	**XVB L4B5**	0.280
		Blue	**XVB L4B6**	0.280
		Clear	**XVB L4B7**	0.280
		Yellow	**XVB L4B8**	0.280
	Incandescent bulb 7 W max. ~ 48…230 V	Green	**XVB L4M3**	0.280
		Red	**XVB L4M4**	0.280
		Orange	**XVB L4M5**	0.280
		Blue	**XVB L4M6**	0.280
		Clear	**XVB L4M7**	0.280
		Yellow	**XVB L4M8**	0.280

(1) Incandescent bulbs and LEDs, see page 4/57.

General: page 4/46 Characteristics: page 4/48 Dimensions: page 4/58

Safety dialogue solutions

Illuminated beacons Ø 70 mm
Harmony type XVB L Universal
Complete beacons with LED light source



XVB L0B●

Beacons with steady light signalling

Description	Light source	Colour	Reference	Weight kg
Complete unit comprising: - 1 illuminated unit - 1 base unit (direct or tube fixing) -	LED, included ⎓ 24 V	Green	**XVB L0B3**	0.270
		Red	**XVB L0B4**	0.270
		Orange	**XVB L0B5**	0.270
		Blue	**XVB L0B6**	0.270
		Clear	**XVB L0B7**	0.270
		Yellow	**XVB L0B8**	0.270
	LED, included ∼ 120 V	Green	**XVB L0G3**	0.270
		Red	**XVB L0G4**	0.270
		Orange	**XVB L0G5**	0.270
		Blue	**XVB L0G6**	0.270
		Clear	**XVB L0G7**	0.270
		Yellow	**XVB L0G8**	0.270
	LED, included ∼ 230 V	Green	**XVB L0M3**	0.270
		Red	**XVB L0M4**	0.270
		Orange	**XVB L0M5**	0.270
		Blue	**XVB L0M6**	0.270
		Clear	**XVB L0M7**	0.270
		Yellow	**XVB L0M8**	0.270



XVB L1B●

Beacons with integral flashing light signalling

Description	Light source	Colour	Reference	Weight kg
Complete unit comprising: - 1 illuminated unit - 1 base unit (direct or tube fixing) -	LED, included ⎓ 24 V	Green	**XVB L1B3**	0.280
		Red	**XVB L1B4**	0.280
		Orange	**XVB L1B5**	0.280
		Blue	**XVB L1B6**	0.280
		Clear	**XVB L1B7**	0.280
		Yellow	**XVB L1B8**	0.280
	LED, included ∼ 120 V	Green	**XVB L1G3**	0.280
		Red	**XVB L1G4**	0.280
		Orange	**XVB L1G5**	0.280
		Blue	**XVB L1G6**	0.280
		Clear	**XVB L1G7**	0.280
		Yellow	**XVB L1G8**	0.280
	LED, included ∼ 230 V	Green	**XVB L1M3**	0.280
		Red	**XVB L1M4**	0.280
		Orange	**XVB L1M5**	0.280
		Blue	**XVB L1M6**	0.280
		Clear	**XVB L1M7**	0.280
		Yellow	**XVB L1M8**	0.280

General: page 4/46 | Characteristics: page 4/48 | Dimensions: page 4/58

Safety dialogue solutions

Illuminated beacons Ø 70 mm
Harmony type XVB L Universal
Complete beacons with “flash” discharge tube



XVB L6B●



XVB L8B●

Beacons with 5 Joule “flash” discharge tube

Description	Light source	Colour	Reference	Weight kg
Complete unit comprising: - 1 illuminated unit - 1 base unit (direct or tube fixing)	Integral “flash” discharge tube ⎓ 24 V	Green	**XVB L6B3**	0.440
		Red	**XVB L6B4**	0.440
		Orange	**XVB L6B5**	0.440
		Blue	**XVB L6B6**	0.440
		Clear	**XVB L6B7**	0.440
		Yellow	**XVB L6B8**	0.440
	Integral “flash” discharge tube ~ 120 V	Green	**XVB L6G3**	0.425
		Red	**XVB L6G4**	0.425
		Orange	**XVB L6G5**	0.425
		Blue	**XVB L6G6**	0.425
		Clear	**XVB L6G7**	0.425
		Yellow	**XVB L6G8**	0.425
	Integral “flash” discharge tube ~ 230 V	Green	**XVB L6M3**	0.435
		Red	**XVB L6M4**	0.435
		Orange	**XVB L6M5**	0.435
		Blue	**XVB L6M6**	0.435
		Clear	**XVB L6M7**	0.435
		Yellow	**XVB L6M8**	0.435

Beacons with 10 Joule “flash” discharge tube

Description	Light source	Colour	Reference	Weight kg
Complete unit comprising: - 1 illuminated unit - 1 base unit (direct or tube fixing)	Integral “flash” discharge tube ⎓ 24 V	Green	**XVB L8B3**	0.450
		Red	**XVB L8B4**	0.450
		Orange	**XVB L8B5**	0.450
		Blue	**XVB L8B6**	0.450
		Clear	**XVB L8B7**	0.450
		Yellow	**XVB L8B8**	0.450
	Integral “flash” discharge tube ~ 120 V	Green	**XVB L8G3**	0.460
		Red	**XVB L8G4**	0.460
		Orange	**XVB L8G5**	0.460
		Blue	**XVB L8G6**	0.460
		Clear	**XVB L8G7**	0.460
		Yellow	**XVB L8G8**	0.460
	Integral “flash” discharge tube ~ 230 V	Green	**XVB L8M3**	0.460
		Red	**XVB L8M4**	0.460
		Orange	**XVB L8M5**	0.460
		Blue	**XVB L8M6**	0.460
		Clear	**XVB L8M7**	0.460
		Yellow	**XVB L8M8**	0.460

4

General: page 4/46 Characteristics: page 4/48 Dimensions: page 4/58

Safety dialogue solutions

Indicator banks Ø 70 mm
Harmony type XVB C Universal (customer assembly, up to 5 units)
Illuminated units for incandescent bulbs or LEDs (BA 15d base fitting)

For use with base unit XVB C●●: see page 4/56



XVB C3●



XVB C4●●

Illuminated units with steady light signalling

Description	Light source, to be ordered separately *(1)*	Colour	Reference	Weight kg
Illuminated units	Incandescent bulb 7 W max. 250 V max. or LED	Green	**XVB C33**	0.140
		Red	**XVB C34**	0.140
		Orange	**XVB C35**	0.140
		Blue	**XVB C36**	0.140
		Clear	**XVB C37**	0.140
		Yellow	**XVB C38**	0.140

Illuminated units with integral flashing light signalling

Description	Light source, to be ordered separately *(1)*	Colour	Reference	Weight kg
Illuminated units	Incandescent bulb 7 W max. ∼ 24 V ⎓ 24…48 V or LED	Green	**XVB C4B3**	0.160
		Red	**XVB C4B4**	0.160
		Orange	**XVB C4B5**	0.160
		Blue	**XVB C4B6**	0.160
		Clear	**XVB C4B7**	0.160
		Yellow	**XVB C4B8**	0.160
	Incandescent bulb 7 W max. ∼ 48…230 V or LED	Green	**XVB C4M3**	0.160
		Red	**XVB C4M4**	0.160
		Orange	**XVB C4M5**	0.160
		Blue	**XVB C4M6**	0.160
		Clear	**XVB C4M7**	0.160
		Yellow	**XVB C4M8**	0.160

(1) Incandescent bulbs and LEDs, see page 4/57.

Safety dialogue solutions

Indicator banks Ø 70 mm

Harmony type XVB C Universal (customer assembly, up to 5 units)

Illuminated units with integral LED

For use with base unit XVB C●●: see page 4/56



XVB C2●●

Illuminated units with steady light signalling

Description	Voltage	Colour	Reference	Weight kg
Illuminated units with integral LED Protected LED	⎓ 24 V	Green	**XVB C2B3** *(1)*	0.150
		Red	**XVB C2B4** *(1)*	0.150
		Orange	**XVB C2B5** *(1)*	0.150
		Blue	**XVB C2B6** *(1)*	0.150
		Clear	**XVB C2B7** *(1)*	0.150
		Yellow	**XVB C2B8** *(1)*	0.150
	∿ 120 V	Green	**XVB C2G3**	0.150
		Red	**XVB C2G4**	0.150
		Orange	**XVB C2G5**	0.150
		Blue	**XVB C2G6**	0.150
		Clear	**XVB C2G7**	0.150
		Yellow	**XVB C2G8**	0.150
	∿ 230 V	Green	**XVB C2M3**	0.150
		Red	**XVB C2M4**	0.150
		Orange	**XVB C2M5**	0.150
		Blue	**XVB C2M6**	0.150
		Clear	**XVB C2M7**	0.150
		Yellow	**XVB C2M8**	0.150



XVB C5●●

Illuminated units with integral flashing light signalling

Description	Voltage	Colour	Reference	Weight kg
Illuminated units with integral LED Protected LED	⎓ 24 V	Green	**XVB C5B3**	0.170
		Red	**XVB C5B4**	0.170
		Orange	**XVB C5B5**	0.170
		Blue	**XVB C5B6**	0.170
		Clear	**XVB C5B7**	0.170
		Yellow	**XVB C5B8**	0.170
	∿ 120 V	Green	**XVB C5G3**	0.170
		Red	**XVB C5G4**	0.170
		Orange	**XVB C5G5**	0.170
		Blue	**XVB C5G6**	0.170
		Clear	**XVB C5G7**	0.170
		Yellow	**XVB C5G8**	0.170
	∿ 230 V	Green	**XVB C5M3**	0.170
		Red	**XVB C5M4**	0.170
		Orange	**XVB C5M5**	0.170
		Blue	**XVB C5M6**	0.170
		Clear	**XVB C5M7**	0.170
		Yellow	**XVB C5M8**	0.170

(1) To order an illuminated unit with integral LED pre-fitted with light diffuser XVB Z18, add the letter "D" to the end of the reference. Example: XVB C2B3D.

4

Safety dialogue solutions

Indicator banks Ø 70 mm
Harmony type XVB C Universal (customer assembly, up to 5 units)
Illuminated units with integral “flash” discharge tube

For use with base unit XVB C●●: see page 4/56



XVB C6●●



XVB C8●●

Illuminated units with 5 Joule “flash” discharge tube

Description	Light source	Colour	Reference	Weight kg
Illuminated units	Integral “flash” discharge tube ⎓ 24 V	Green	**XVB C6B3**	0.295
		Red	**XVB C6B4**	0.295
		Orange	**XVB C6B5**	0.295
		Blue	**XVB C6B6**	0.295
		Clear	**XVB C6B7**	0.295
		Yellow	**XVB C6B8**	0.295
	Integral “flash” discharge tube ∼ 120 V	Green	**XVB C6G3**	0.280
		Red	**XVB C6G4**	0.280
		Orange	**XVB C6G5**	0.280
		Blue	**XVB C6G6**	0.280
		Clear	**XVB C6G7**	0.280
		Yellow	**XVB C6G8**	0.280
	Integral “flash” discharge tube ∼ 230 V	Green	**XVB C6M3**	0.290
		Red	**XVB C6M4**	0.290
		Orange	**XVB C6M5**	0.290
		Blue	**XVB C6M6**	0.290
		Clear	**XVB C6M7**	0.290
		Yellow	**XVB C6M8**	0.290

Illuminated units with 10 Joule “flash” discharge tube

Description	Light source	Colour	Reference	Weight kg
Illuminated units	Integral “flash” discharge tube ⎓ 24 V	Green	**XVB C8B3**	0.305
		Red	**XVB C8B4**	0.305
		Orange	**XVB C8B5**	0.305
		Blue	**XVB C8B6**	0.305
		Clear	**XVB C8B7**	0.305
		Yellow	**XVB C8B8**	0.305
	Integral “flash” discharge tube ⎓ 48 V	Orange	**XVB C8E5**	0.315
	Integral “flash” discharge tube ∼ 120 V	Green	**XVB C8G3**	0.315
		Red	**XVB C8G4**	0.315
		Orange	**XVB C8G5**	0.315
		Blue	**XVB C8G6**	0.315
		Clear	**XVB C8G7**	0.315
		Yellow	**XVB C8G8**	0.315
	Integral “flash” discharge tube ∼ 230 V	Green	**XVB C8M3**	0.315
		Red	**XVB C8M4**	0.315
		Orange	**XVB C8M5**	0.315
		Blue	**XVB C8M6**	0.315
		Clear	**XVB C8M7**	0.315
		Yellow	**XVB C8M8**	0.315

Safety dialogue solutions

Indicator banks Ø 70 mm

Harmony type XVB C Universal (customer assembly, up to 5 units)

Audible units, base units, cover, accessories



XVB C9●

Audible units

Description	Characteristics	Reference	Weight kg
Buzzer, 90 dB at 1 m Adjustable: - 70 or 90 dB - continuous or intermittent tone using microswitch	⎓ 12…48 V	**XVB C9B**	0.170
	∿ 120…230 V	**XVB C9M**	0.180

Base units (for direct or tube fixing)

Description	For use with	Type	Reference	Weight kg
Base unit + cover with bottom or side cable entry	Banks without "flash" discharge tube unit	Standard	**XVB C21**	0.190
Base unit only with bottom or side cable entry	Banks with "flash" discharge tube unit	Standard	**XVB C07**	0.160
Base unit + cover with side cable entry	All types of bank	AS-Interface *(1)*	**XVB C21A**	–
Base unit + cover with bottom entry, pre-cabled (length 1 metre) and fitted with M12 end connector	All types of bank	AS-Interface *(1)*	**XVB C21B**	–

(1) For further information on AS-Interface connections, refer to our "Industrial communication in machines and installations" catalogue.



XVB C07

Accessories specific to indicator banks XVB C

Description	Application	Unit reference	Weight kg
Cover only	For use with XVB C2, XVB C3, XVB C4, XVB C5 and XVB C9	**XVB C081**	0.030
Set of 6 coloured markers	For identification of the position of units in the event of dismantling the bank	**XVB C22**	0.001
Set of 5 legend holders	For identification of stacked units on base unit	**XVB C23**	0.002
Sheet of 85 legends	For use with base unit legend holder XVB C23	**XVB CY1**	0.005
Sheet of 52 legends	For identification of stacked units, used on locking ring	**XVB CY2**	0.005
Adaptor for side entry through base unit	With 13P cable gland	**XVB C14**	0.015
SIS labelling software (in English, French, German, Italian and Spanish)	For creating legends	**XBY 2U**	0.100
Light diffuser, clear plastic (Sold in boxes)	Only for use with LED illuminated units (all colours) One box allows to equip 5 illuminated units.	**XVB Z18**	0.080



XVB Z18

Safety dialogue solutions
Beacons and indicator banks Ø 70 mm
Harmony type XVB Universal
Accessories



XVB Z02 XVB Z03/Z04

Accessories common to beacons XVB L and indicator banks XVB C

Description	Height under base unit (mm)	Colour	Reference	Weight kg
Fixing bases comprising Ø 25 mm aluminium support tube glued into a black plastic fixing plate	80	Black aluminium	**XVB Z02**	0.110
		Aluminium	**XVB Z02A**	0.110
	380	Black aluminium	**XVB Z03**	0.200
		Aluminium	**XVB Z03A**	0.200
	780	Black aluminium	**XVB Z04**	0.325
		Aluminium	**XVB Z04A**	0.325

Description	For use with	Material	Reference	Weight kg
Support tube concealment cover	Support tubes **XVB Z02, XVB Z02A**	ABS	**XVB C020**	0.080
	Support tubes **XVB Z03, XVB Z03A**	ABS	**XVB C030**	0.305
	Support tubes **XVB Z04, XVB Z04A**	ABS	**XVB C040**	0.610
Ø 25 mm aluminium support tube Height under base unit 780 mm	Fixing plate XVB Z01 (to be glued into the plastic fixing plate)	Plastic	**XVB Z14**	0.690
Fixing plate for use on horizontal support	Ø 25 mm aluminium support tube	Plastic	**XVB Z01**	0.050
Fixing plate for use on vertical support	Base unit (direct mounting), fixing plate XVB Z01 or fixing bases XVB Z0●	Zamak	**XVB C12**	0.380

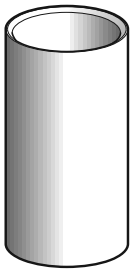

XVB C020



XVB Z01



XVB C12



DL1 B●●



DL1 BD●●/DL1 BK●●

Description	Characteristics		Sold in lots of	Unit reference	Weight kg
Incandescent bulbs BA 15d base fitting	12 V	7 W	10	**DL1 BEJ**	0.090
	24 V	6.5 W	10	**DL1 BEB**	0.090
	48 V	6 W	10	**DL1 BEE**	0.090
	120 V	7 W	10	**DL1 BEG**	0.090
	230 V	7 W	10	**DL1 BEM**	0.090
LEDs BA 15d base fitting Protected LED	≂ 24 V	White	1	**DL1 BDB1**	0.015
		Green	1	**DL1 BDB3**	0.015
		Red	1	**DL1 BDB4**	0.015
		Orange	1	**DL1 BDB5**	0.015
		Blue	1	**DL1 BDB6**	0.015
		Yellow	1	**DL1 BDB8**	0.015
	∼ 120 V	White	1	**DL1 BDG1**	0.015
		Green	1	**DL1 BDG3**	0.015
		Red	1	**DL1 BDG4**	0.015
		Orange	1	**DL1 BDG5**	0.015
		Blue	1	**DL1 BDG6**	0.015
		Yellow	1	**DL1 BDG8**	0.015
	∼ 230 V	White	1	**DL1 BDM1**	0.015
		Green	1	**DL1 BDM3**	0.015
		Red	1	**DL1 BDM4**	0.015
		Orange	1	**DL1 BDM5**	0.015
		Blue	1	**DL1 BDM6**	0.015
		Yellow	1	**DL1 BDM8**	0.015
Flashing LEDs BA 15d base fitting Protected LED	≂ 24 V	White	1	**DL1 BKB1**	0.015
		Green	1	**DL1 BKB3**	0.015
		Red	1	**DL1 BKB4**	0.015
		Orange	1	**DL1 BKB5**	0.015
		Blue	1	**DL1 BKB6**	0.015
		Yellow	1	**DL1 BKB8**	0.015
	∼ 120 V	White	1	**DL1 BKG1**	0.015
		Green	1	**DL1 BKG3**	0.015
		Red	1	**DL1 BKG4**	0.015
		Orange	1	**DL1 BKG5**	0.015
		Blue	1	**DL1 BKG6**	0.015
		Yellow	1	**DL1 BKG8**	0.015
	∼ 230 V	White	1	**DL1 BKM1**	0.015
		Green	1	**DL1 BKM3**	0.015
		Red	1	**DL1 BKM4**	0.015
		Orange	1	**DL1 BKM5**	0.015
		Blue	1	**DL1 BKM6**	0.015
		Yellow	1	**DL1 BKM8**	0.015

General: page 4/46 Characteristics: page 4/48 Dimensions: page 4/58

Safety dialogue solutions
Beacons and indicator banks Ø 70 mm
Universal, Harmony type XVB

Dimensions

Illuminated beacons XVB L●●●

For BA 15d bulb or LED

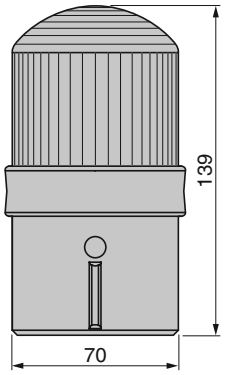

With "flash" discharge tube unit

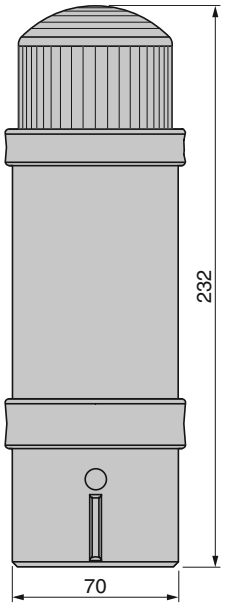

Indicator banks XVB C●●●

Without "flash" discharge tube unit

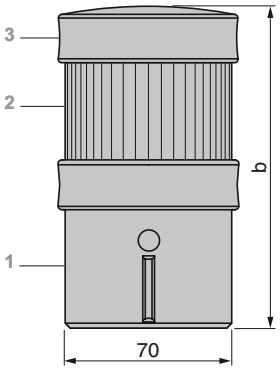

1 + 3 = Base unit + cover XVB C21
2 Illuminated or audible signalling unit XVB C●●●

Number of illuminated or audible signalling units (no "flash")	b
1	138
2	201
3	264
4	327
5	390

With "flash" discharge tube unit

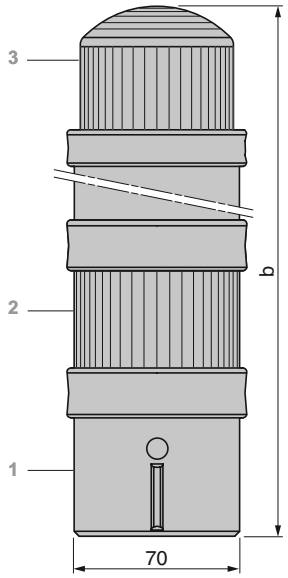

1 Base unit XVB C07
2 Illuminated or audible signalling unit XVB C●●●
3 "Flash" unit XVB C●●●

Number of illuminated or audible signalling units other than "flash" tube	b
1	295
2	358
3	421
4	484

Panel cut-out for direct fixing

On base unit XVB C21, XVB C07, XVB C21A or XVB C21B

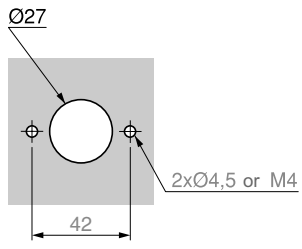

4

General: page4/46 | Characteristics: page 4/48 | References: page 4/50

Dimensions

With fixing bases comprising XVB Z0● (aluminium support tube glued into black plastic fixing plate)

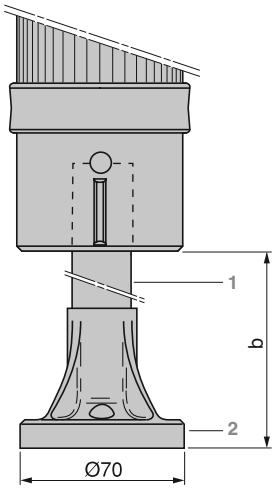

Fixing base comprising XVB Z0● (Ø 25 mm support tube 1 glued into plastic fixing plate 2)

XVB	b
Z02/Z02A	80
Z03/Z03A	380
Z04/Z04A	780

Horizontal support panel cut-out for mounting on fixing plate

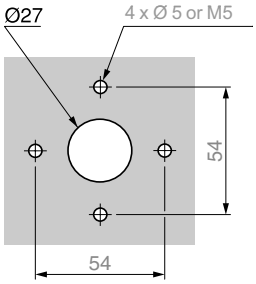

With fixing plate XVB C12 for use on vertical support

Direct mounting on base unit

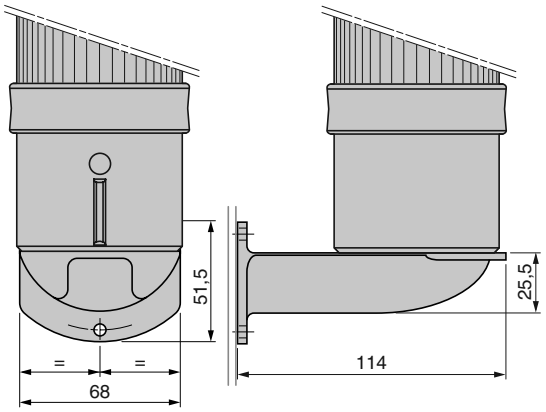

Mounting using fixing base XVB Z0● (aluminium support tube glued into black plastic fixing plate)

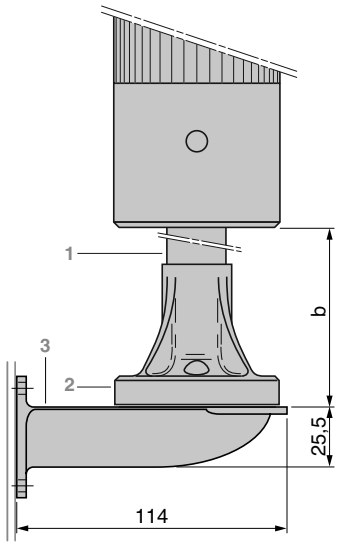

Vertical support panel drillings for mounting fixing plate XVB C12

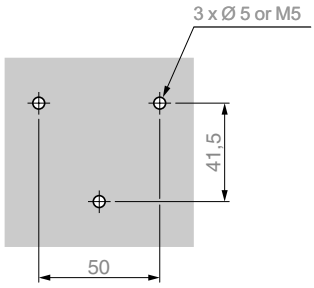

Fixing base comprising XVB Z0● (Ø 25 mm support tube 1 glued into plastic fixing plate 2) mounted on fixing plate XVB C12 for vertical support 3

XVB	b
Z02/Z02A	80
Z03/Z03A	380
Z04/Z04A	780

Installation

Connections

XVB L

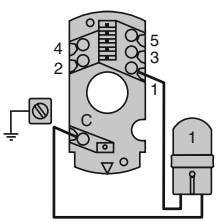

XVB C

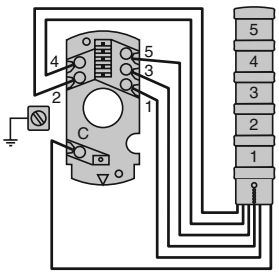

Adjustment of audible signal for buzzers type XVB C9●

By means of 4 microswitches located in the base of the buzzer:
- 2 switches marked **1** and **2** for selecting continuous or intermittent **mode** (Hz).
- 2 switches marked **3** and **4** for selecting the **power** (dB) of the audible signal.

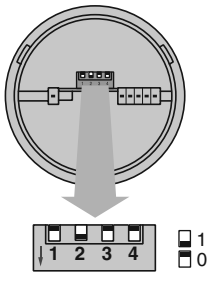

Position of microswitches		Setting
1	**2**	**Mode**
1	1	▬ 2.8 kHz
1	0	▬ 2.8 kHz
0	1	⊓⊓ 5 Hz *(1)*
0	0	⊓_ 1 Hz
3	**4**	**Power**
1	1	90 dB *(1)*
0	1	85 dB
1	0	80 dB
0	0	70 dB

(1) Factory setting.

General: page 4/46
Characteristics: page 4/48
References: page 4/50

General

These rotating beacons are designed for long distance signalling applications.

Characteristics

Conformity to standards			IEC/EN 60947-1, IEC/EN 60947-5-1, UL 508, CSA C22-2-14
Protective treatment	Standard version		"TC"
Ambient air temperature	For storage	**°C**	- 40…+ 70
	For operation	**°C**	- 20…+ 50
Electric shock protection	Conforming to IEC/EN 61140 and NF C 20-030		Class I
Degree of protection	Conforming to IEC 60529 and NF C 20-010		IP 65
	Conforming to UL 508 and CSA 22		Type 4X Nema "INDOOR"
Material	Base unit		Glass-reinforced polyamide 6
	Domed lens unit		Polycarbonate
Rated insulation voltage (Ui)	Conforming to IEC/EN 60947-1	**V**	250
Consumption	Halogen bulbs	**mA**	⎓ 24 V: < 3100
	Incandescent bulbs	**mA**	⎓ 24 V: < 1050
			∿ 120 V: < 210
			∿ 230 V: < 110
Rated impulse withstand voltage	Conforming to IEC/EN 60947-1	**kV**	U imp = 4
Light source	Halogen bulbs		Bulbs with H1 base fitting: maximum power 70 W
	Incandescent bulbs		Bulbs with BA 15d base fitting: maximum power 25 W
Service life of motor		**H**	> 2000
Mounting position			Horizontal
Flash frequency		**Hz**	3
Connection	Maximum clamping capacity	**mm²**	1 x 1.5 mm²
Cable entry			For ISO M20 x 1.5 cable gland (included)

Dimensions

Panel cut-out

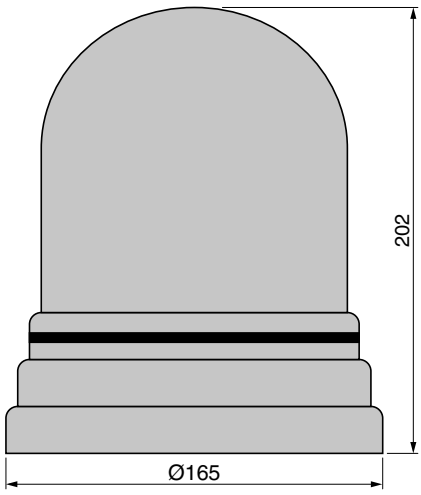

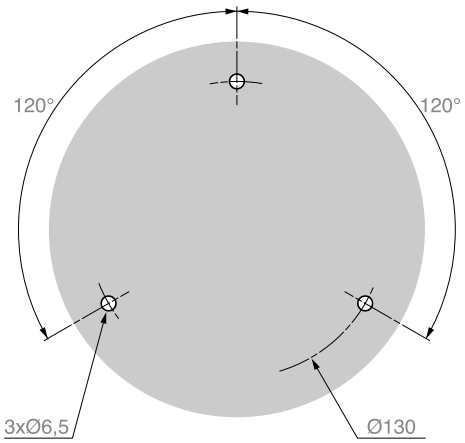

M20 x 1.5 cable gland included

Safety dialogue solutions
Rotating mirror beacons, type XVR



XVR 1●●●

Rotating mirror beacons

Light source	Supply voltage	Colour	Reference	Weight kg
Halogen bulb included 70 W	≂ 24 V	Green	**XVR 1B93**	1.165
		Red	**XVR 1B94**	1.165
		Orange	**XVR 1B95**	1.165
		Blue	**XVR 1B96**	1.165
		Yellow	**XVR 1B98**	1.165
Incandescent bulb included 25 W	≂ 24 V	Green	**XVR 1B03**	1.165
		Red	**XVR 1B04**	1.165
		Orange	**XVR 1B05**	1.165
		Blue	**XVR 1B06**	1.165
		Yellow	**XVR 1B08**	1.165
	∿ 120 V	Green	**XVR 1G03**	1.235
		Red	**XVR 1G04**	1.235
		Orange	**XVR 1G05**	1.235
		Blue	**XVR 1G06**	1.235
		Yellow	**XVR 1G08**	1.235
	∿ 230 V	Green	**XVR 1M03**	1.235
		Red	**XVR 1M04**	1.235
		Orange	**XVR 1M05**	1.235
		Blue	**XVR 1M06**	1.235
		Yellow	**XVR 1M08**	1.235

Accessories and spare parts

Description	Characteristics	Unit reference	Weight kg
Domed lens unit	Green	**XVR 0153**	0.335
	Red	**XVR 0154**	0.335
	Orange	**XVR 0155**	0.335
	Blue	**XVR 0156**	0.335
	Yellow	**XVR 0158**	0.335
Protective grill for domed lens unit	–	**XVR 016** *(1)*	–
Fixing plate for use on vertical support	–	**XVR 012**	–
Fixing plate for support tube (1/2 NPT)	–	**XVR 013**	–
Halogen bulbs H1 base fitting, 70 W	24 V	**DL1 BRBH**	–
Incandescent bulbs BA 15d base fitting, 25 W (sold in lots of 10)	24 V	**DL1 BRB**	0.100
	120 V	**DL1 BRG**	0.100
	230 V	**DL1 BRM**	0.100

(1) This protective grill is only suitable for use with the XVR 1●●● rotating mirror beacon, without cable gland fitted.

General

These sirens are designed for long distance signalling applications.

Characteristics

Conformity to standards			IEC/EN 60947-1, IEC/EN 60947-5-1
Protective treatment	Standard version		"TC"
Ambient air temperature	For storage	**°C**	- 40…+ 70
	For operation	**°C**	- 40…+ 50
Electric shock protection	Conforming to IEC/EN 61140 and NF C 20-030	**kV**	∼ 120 V and ∼ 230 V: class II
		kV	⎓ 24 V: class III
Degree of protection	Conforming to IEC 60529 and NF C 20-010		IP 40
Material	Body		Glass-reinforced polyamide 6
	Cone		Butadiene-styrene acrylic
Rated insulation voltage (Ui)	Conforming to IEC/EN 60947-1	**V**	250
Consumption		**mA**	⎓ 24: 440
		mA	∼ 120: 110
		mA	∼ 230: 55
Frequency	1-tone	**Hz**	1000 ± 10%
	2-tone	**Hz**	700 and 800 ± 15%
Rated impulse withstand voltage	Conforming to IEC/EN 60947-1	**kV**	∼ 120 V and ∼ 230 V: U imp = 4
		kV	⎓ 24 V: U imp = 1.5
Mounting position			All positions
Connection	Maximum clamping capacity	**mm²**	1 x 1.5 with cable end

Safety dialogue solutions
Sirens, type XVS

References



XVS B●

Sirens

Description	Supply voltage	Number of tones	Reference	Weight kg
Sirens 106 db	⎓ 24 V	1	**XVS B1**	0.860
		2	**XVS B2**	0.860
	∿ 120 V	1	**XVS G1**	0.860
		2	**XVS G2**	0.860
	∿ 230 V	1	**XVS M1**	0.860
		2	**XVS M2**	0.860

Dimensions

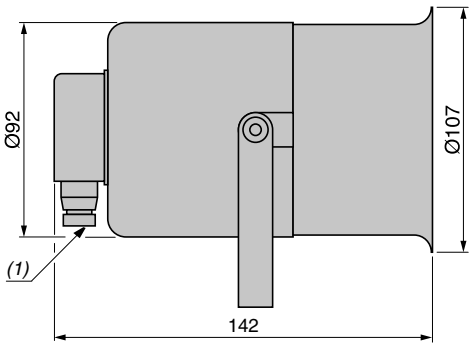

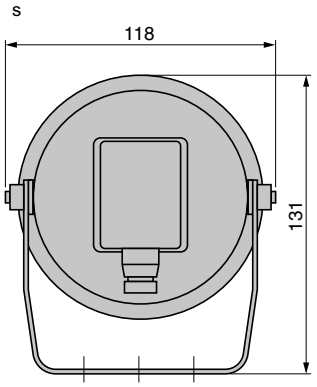

(1) Cable gland n° 7 (DIN Pg 7), included.

Panel cut-out

