Harmony™ 22mm spring clamp contacts and light modules

Simplifying the wiring and installation of push buttons.

- Accommodates different wire sizes
- Single lever action opens both clamps
- Molded-in holes for test probes

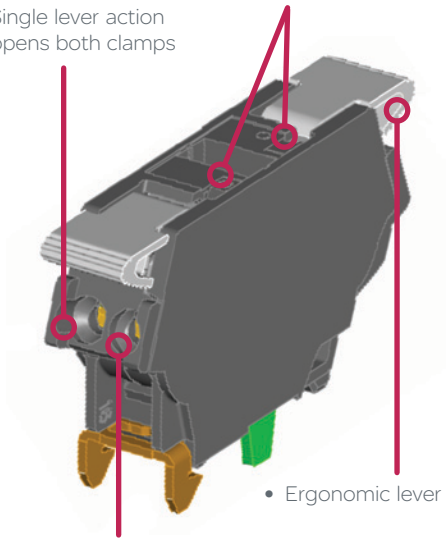

- Ergonomic lever
- Wire guides for simple insertion
- Prevents wire hitting screw, typical with screw terminals
- Prevents clamping on insulation



1 Raise levers



2 Insert wires



3 Close levers

With a snap of a lever you can reduce your 22mm push button wiring time by 66 percent compared with traditional screw clamps. Harmony™ spring clamp contacts and light modules from Schneider Electric™ offer a tool-free, intuitive wiring configuration along with a secure connection that provides vibration resistance for all of your 22mm push button application needs.

The spring clamp contacts and light modules provide the same performance as screw clamps but offer an ergonomic single lever that opens both clamps and features wire guides for simple, secure placement. It can accommodate different wire sizes and accepts stranded or solid wires with or without cable ends.

Schneider Electric, a world leader in control and signaling components, continues to provide innovative and efficient operator interface solutions with the Harmony range of push buttons.

Key Features:

- Simple intuitive operation
- Wiring with no tools
- Accepts solid or stranded wire with or without cable ends
- 66 percent faster wiring than screw clamps
- Vibration resistance without re-torquing connections
- Confidence in a secure connection
- Visible indication of a secure connection

Make the most of your energy℠

Schneider Electric™

Harmony™ 22mm spring clamp contacts and light modules

Specifications

Spring Clamp	Screw Clamp	Characteristics	Standards	Rating
•	•	Short circuit protection	IEC60947-5-1	A600/Q600
•	•	Cabling capacity (stranded or solid)	IEC60947-1	Min: 1X24AWG/0.22 without cable end
				Max: 2x14AWG/1.5 without cable end
				Max: 2x16AWG/1.5 with cable end
•	•	Short circuit protection	IEC/EN60947-5-1	1000A, with gG fuse per IEC60269-1
•	•	Rated thermal current	IEC/EN60947-5-1	10A
•	•	Rated insulation voltage	IEC60847-1	Contacts: Ui=600, degree of pollution 3 LED: Ui=250, degree of pollution 3
•	•	Vibration resistance	IEC60068-2-6	2 to 500Hz: 5gn
•	•	Cable pull out	IEC60947-1 UL489E	—

Part Numbers

Light Modules

Description	Supply Voltage	Load	Catalog Number
Integral LED (to combine with heads)	12 VAC/VDC	White	ZBVJ15
		Green	ZBVJ35
		Red	ZBVJ45
		Orange	ZBVJ55
		Blue	ZBVJ65
	24 VAC/VDC	White	ZBVB15
		Green	ZBVB35
		Red	ZBVB45
		Orange	ZBVB55
		Blue	ZBVB65
	110 – 120 VAC	White	ZBVG15
		Green	ZBVG35
		Red	ZBVG45
		Orange	ZBVG55
		Blue	ZBVG65
	230 – 240 VAC	White	ZBVM15
		Green	ZBVM35
		Red	ZBVM45
		Orange	ZBVM55
		Blue	ZBVM65

Contact Blocks

Description	Type of Contact	N/O	NC	Catalog Number
Contact blocks	Single	1	—	ZBE 1015
		—	1	ZBE 1025
	With body/mounting kit	1	—	ZB4BZ 1015
		—	1	ZB4BZ 1025
		2	—	ZB4BZ 1035
		—	2	ZB4BZ 1045

Put our expertise to work for you.

For more information on Schneider Electric spring clamp contact and light module solutions, visit us online at **www.Schneider-Electric.us** or talk to one of our experts at **1-888-778-2733**.

Schneider Electric USA, Inc.

Automation and Control Center of Excellence
8001 Knightdale Blvd.
Knightdale, NC 27545
Tel: 919-266-3671
www.schneider-electric.us

Schneider Electric Canada, Inc.

19 Waterman Avenue
Toronto, ON M4B 1Y2
Tel: 1-800-565-6699
www.schneider-electric.ca

This document has been printed on recycled paper

© 2011 Schneider Electric. All Rights Reserved. Schneider Electric, Harmony, and Make the most of your energy are trademarks owned by Schneider Electric Industries SAS or its affiliated companies. • 998-4858_US

Document Number 9001HO1102

July 2011