Photo-electric sensors
Accessories

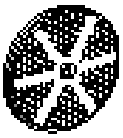
XUZ-Cpp

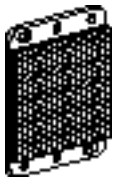
XUZ-C50

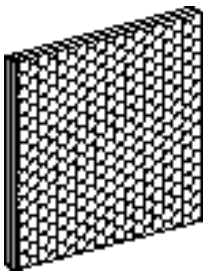
XUZ-C100


XUZ-C24


XUZ-B0p


XUR-Z01


XUR-Z02

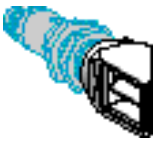
XUB-Z01

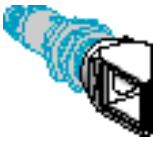
XUB-Z02


XUP-Z01

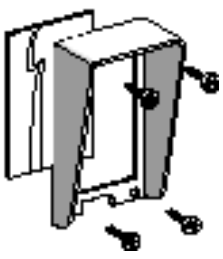
XUZ-D02

Reflectors (for reflex system sensors)

Description	Dimensions		Reference	Weight kg
Reflectors for standard sensing distances	Ø 16 mm		**XUZ-C16**	0.002
	Ø 21 mm		**XUZ-C21**	0.002
	Ø 31 mm		**XUZ-C31**	0.005
	Ø 39 mm		**XUZ-C39**	0.010
	Ø 80 mm		**XUZ-C80**	0.030
Reflector for standard and close range sensing distances	50 x 50 mm		**XUZ-C50**	0.020
Reflector for close range sensing distances	24 x 21 mm		**XUZ-C24**	0.010
Reflector for long range sensing distances	100 x 100 mm		**XUZ-C100**	0.035
Reflective self-adhesive tape (1) (not suitable for use with polarised reflex system sensors)	Width : 25 mm Thickness : 0.2 mm	Length : 1 m	**XUZ-B01**	0.015
		Length : 5 m	**XUZ-B05**	0.075
Reflective self-adhesive tape (1) (specifically for polarised reflex system sensors)	Width : 25 mm Thickness : 0.5 mm	Length : 1 m	**XUZ-B11**	0.020
		Length : 5 m	**XUZ-B15**	0.085

Lenses

Description	Application	Reference	Weight kg
Lens for magnification of spot	Sensors XUR	**XUR-Z01**	0.010
Lens accessory for reduction of spot	Sensors XUR	**XUR-Z02**	0.015

Accessories for reflecting beam through 90°

Description	Application	Reference	Weight kg
90° mirror adaptors (2)	Osiris, design 18 sensors (reflex and diffuse systems)	**XUB-Z01**	0.015
	Osiris, design 18 sensors (thru-beam system)	**XUB-Z02**	0.015
	Sensors type XUP (thru-beam and reflex systems)	**XUP-Z01**	0.015

Lens hood (with fixing screws)

Description	Application	Reference	Weight kg
With protective glass lens	Sensors XUE and XUR	**XUZ-D02**	0.010
Without protective glass lens	Sensors XUE and XUR	**XUZ-D01**	0.005

(1) Suitable for use at maximum ambient temperature + 50 °C.
(2) NOTE : The use of the 90° mirror reduces the usable sensing distance of the sensor by half.

Dimensions :
pages 30180/5 to 30180/7

Photo-electric sensors
Accessories


XUZ-A43

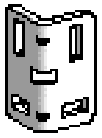
XUZ-A46


XUL-Z41

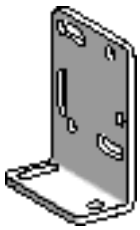
XUZ-A41

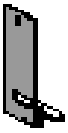
XUZ-A47

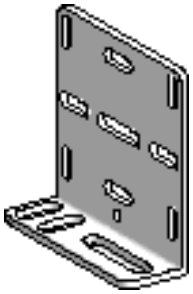
XUZ-A49

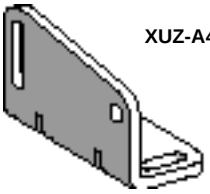
XUZ-A44

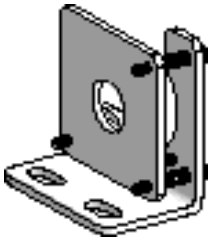
XUZ-A318


XUZ-A118

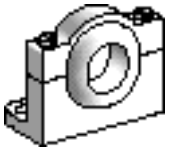
XUZ-A218


XSA-Z1pp


XSZ-B1pp

Fixing accessories

Description	Application	Reference	Weight kg
Bracket, plastic	Sensors XUP and XUM-LpppppS	**XUZ-A46**	0.010
Brackets, metal	Sensors XUL	**XUL-Z41**	0.050
	Sensors XUJ	**XUZ-A41**	0.050
	Sensors XUJ (1)	**XUZ-A43**	0.050
	Sensors XUE	**XUZ-A44**	0.135
	Sensors XUM	**XUZ-A47**	0.010
	Sensors XUJ-L and XUJ-B	**XUZ-A49**	0.120
	Sensors XUp (Ø 18 mm)	**XUZ-A118**	0.045
Precise adjustment mounting bracket (micrometric precision)	Sensors XU2 (Ø 18 mm) with laser transmission	**XUZ-A318**	0.170
Saddle clamp, plastic, adjustable, with ball joint	Sensors XUp (Ø 18 mm)	**XUZ-A218**	0.035
Saddle clamps, plastic (with locking screw)	Sensors XUA (Ø 8 mm)	**XSA-Z108**	0.007
		XSZ-B108	0.006
	Sensors XUp (Ø 18 mm)	**XSA-Z118**	0.020
		XSZ-B118	0.010
	Sensors XUT	**XSA-Z130**	0.030
		XSZ-B130	0.020
	Fibre optics XUF-S0810	**XSA-Z145**	0.005
	Fibre optics XUF-S2510	**XSA-Z155**	0.005
	Fibre optics XUF-S0210	**XSA-Z185**	0.005
Set of 2 fixing nuts, plastic	Sensors XUp (Ø 18 mm)	**XSA-Z318**	0.004

(1) Adjustable throughout 360°

Dimensions :
pages 30180/5 to 30180/7

Photo-electric sensors
Accessories, spare parts


XUZ-D25


XUJ-Z01

Protective covers

Description	For use with	Reference	Weight kg
Protective cover	Sensors XUE and XUJ	**XUZ-D25**	0.920
Potentiometer protective cover	Sensors XUJ	**XUJ-Z01**	0.002
Protective cover	Reflectors XUZ-C80	**XUZ-D15**	0.270


XUZ-D15


XUM-Z0p


XUJ-Z02


XUP-Z02


XUD-Z02

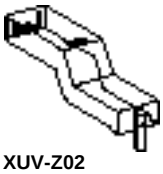
XUV-Z02

Other accessories and spare parts

Description	For use with	Range max.	Diameter	Reference	Weight kg
Masks with two different slits	Sensors XUM (thru-beam system) except XUM-L	10 cm or 40 cm	0.5 mm or 1 mm	**XUM-Z01**	0.001
		0.90 m or 1.5 m	1.5 mm or 2 mm	**XUM-Z03**	0.001
	Sensors XUJ (thru-beam system)	1 m	6 mm	**XUJ-Z02**	0.001
Forked beam director for detection of very small objects or lines (1)	Sensors XUP (diffuse system)			**XUP-Z02**	0.010
Transparent covers	Sensors XUD			**XUD-Z02**	0.002
	Sensors XUV			**XUV-Z02**	0.003
Alignment assistance device	Sensors XUE and XUJ (thru-beam system)			**XUZ-D09**	0.080
Output cable adaptation for bottom entry via 9 mm plastic cable gland	Sensors XUJ			**XUJ-Z09**	0.030

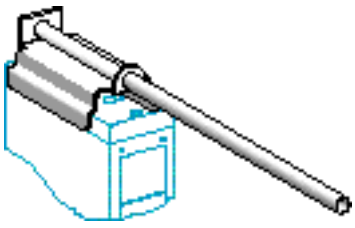
XUZ-D09

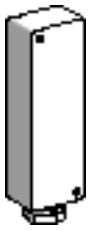
XUJ-Z09

Protection fuses

Description	For use with	Sold in lots of	Unit reference	Weight kg
Cartridge fuse 5 x 20 0.63 A “quick-blow”	Sensors XUB-A and XUL-A (on c)	10	**XUZ-E06**	0.001
Cartridge fuse 5 x 20 0.8 A “quick-blow”	Sensors XUL-A (on a)	10	**XUZ-E08**	0.001
Fuse terminal block	Cartridge fuses XUZ-E0p	50	**AB1-FU10135U**	0.040

(1) Thru-beam system fixed at 6 mm, Ø of beam : 2.5 mm. The use of the director inverts the sensor output signal.

Dimensions :
pages 30180/5 to 30180/7

Reflectors

XUZ-C16

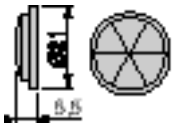

XUZ-C21

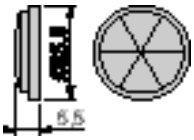

XUZ-C31

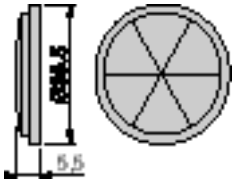

XUZ-C39

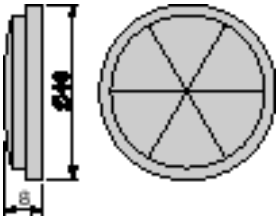

XUZ-C80

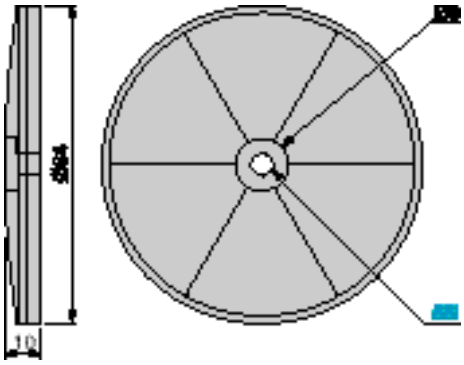

XUZ-C24

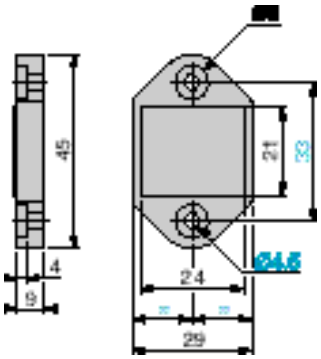

XUZ-C50

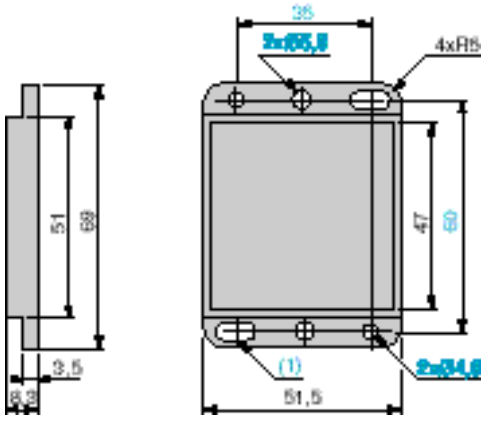

XUZ-C100

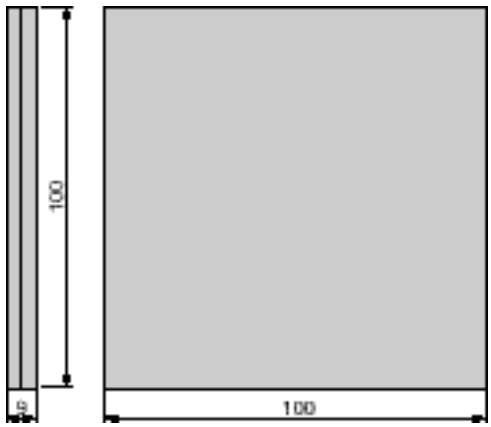

(1) 2 elongated holes 4 x 8

References :
pages 30180/2 to 30180/4

Photo-electric sensors
Accessories

Fixing bracket, adjustable throughout 360°
XUZ-A43

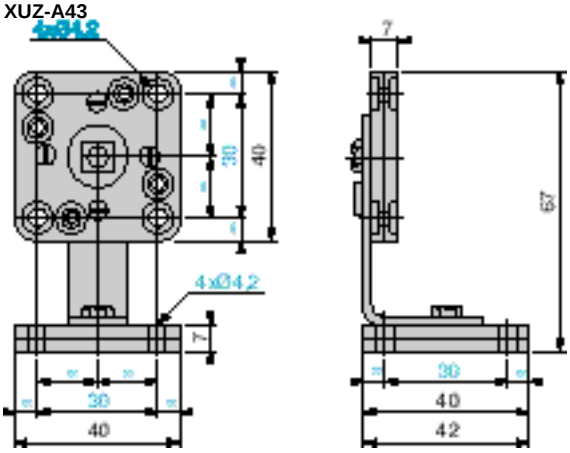

Precise adjustment fixing bracket (micrometric)
XUZ-A318

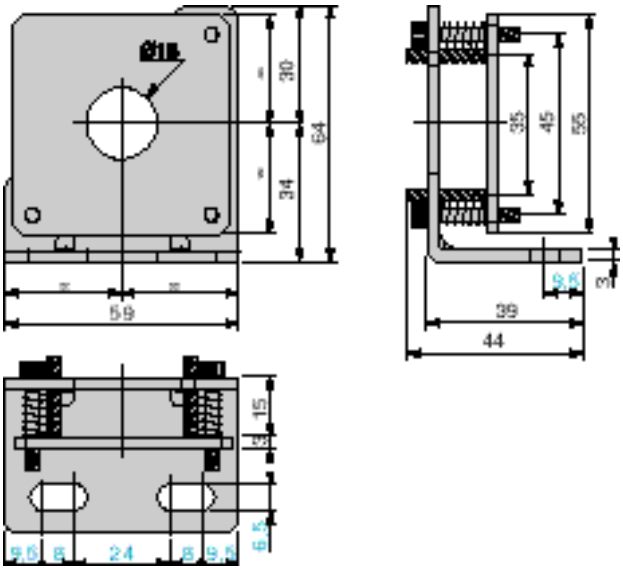

Saddle clamps
XSA-Z1pp

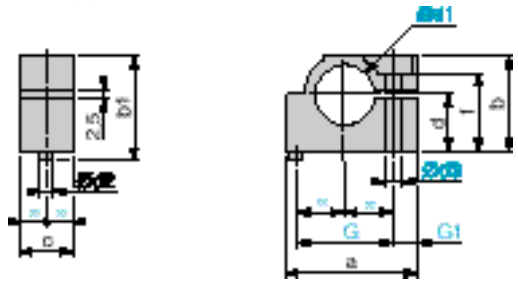

XSA-	a	b	b1	c	d	Ød1	Ød2	Ød3	f	G	G1
Z108	23.5	14.2	16.7	10	8	8.1	2	4	10.5	16	5
Z118	41	30	33	17	18	18.1	3.9	6	24	30	7
Z130	53	39.5	42.5	20	21.5	30.1	3.9	6	33	40	8
Z145	23.5	14.2	16.7	10	8	4.7	2	4	10.5	16	5
Z155	23.5	14.2	16.7	10	8	5.7	2	4	10.5	16	5
Z185	23.5	14.2	16.7	10	8	8.6	2	4	10.5	16	5

XSZ-B1p8, B130

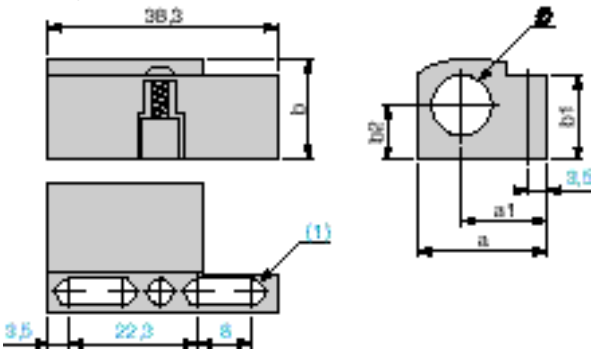

XSZ-	a	a1	b	b1	b2	Ø
B108	21.1	14.5	14.2	12.8	7.5	8
B118	26	15.7	22	20.1	11.5	18
B130	39	21.7	35.5	29.8	18.5	30

(1) 2 elongated holes 4 x 8

XUZ-A118

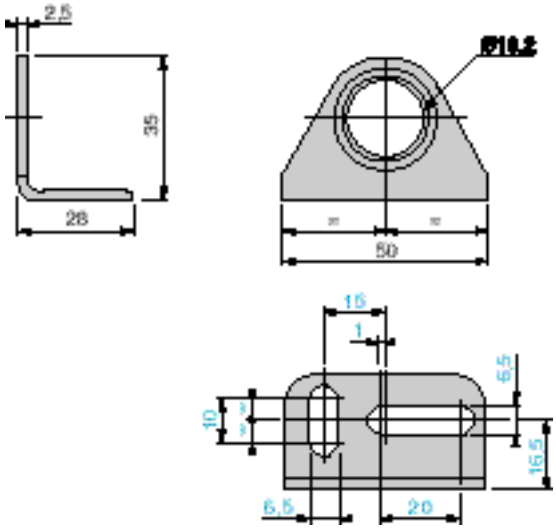

XUZ-A218

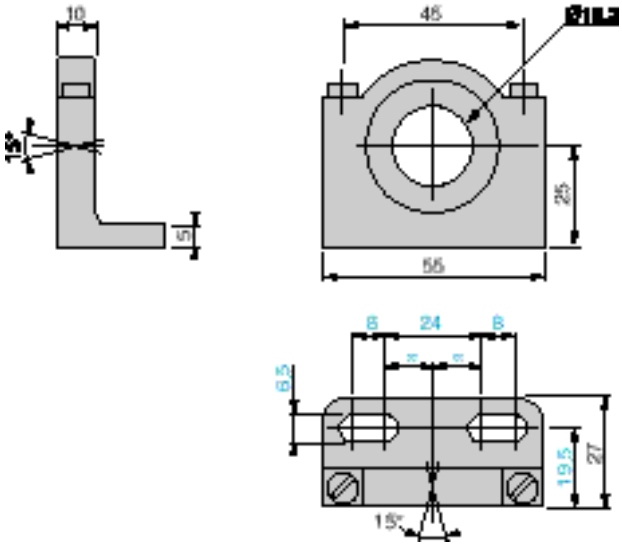

References :
pages 30180/2 to 30180/4

Photo-electric sensors
Accessories

Protective cover for sensors XUE and XUJ
XUZ-D25

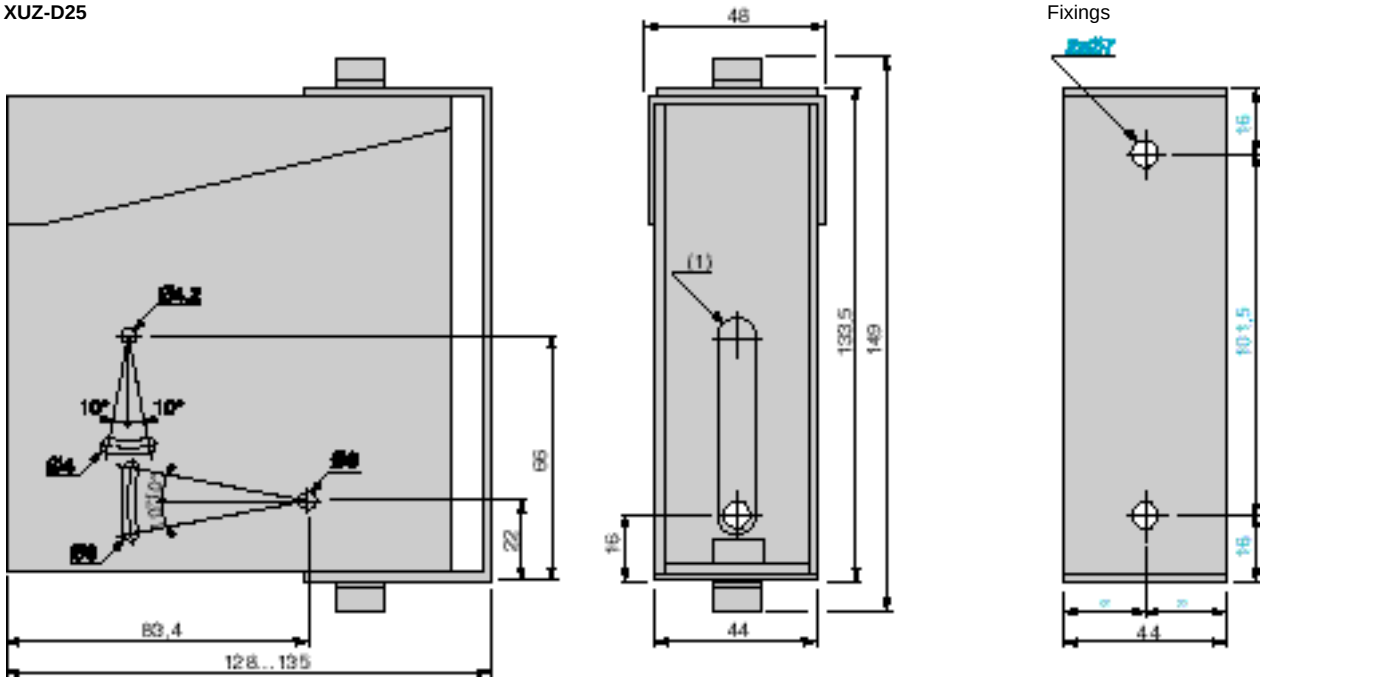

(1) 1 elongated hole Ø 10 x 58

Protective cover for reflector XUZ-C80
XUZ-D15

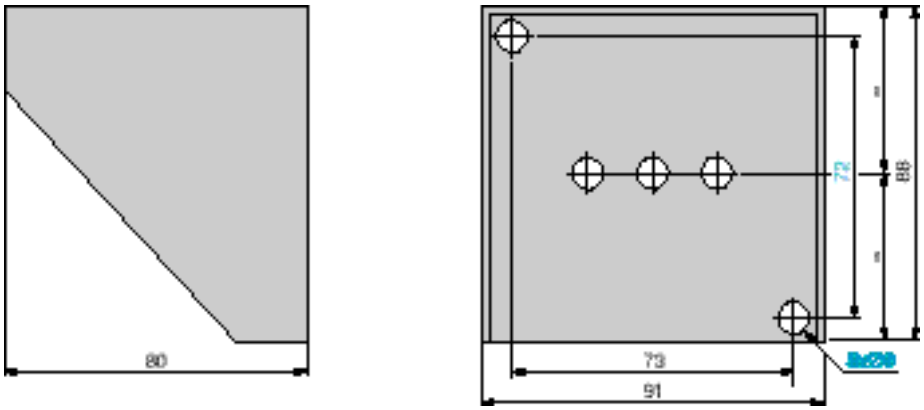

Lens hood
XUZ-D0p

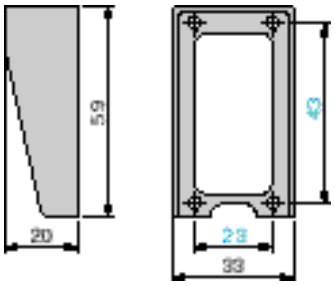

90° mirror
XUP-Z01

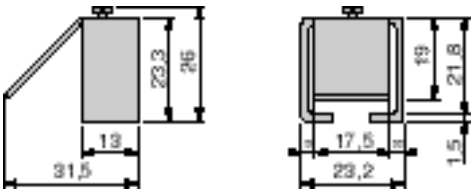

Forked beam director
XUP-Z02

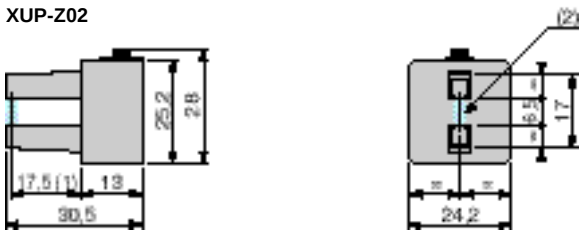

(1) Beam axis
(2) Ø of beam : 2.5 mm

Alignment assistance device (thru-beam system) for sensors XUE and XUJ
XUZ-D09

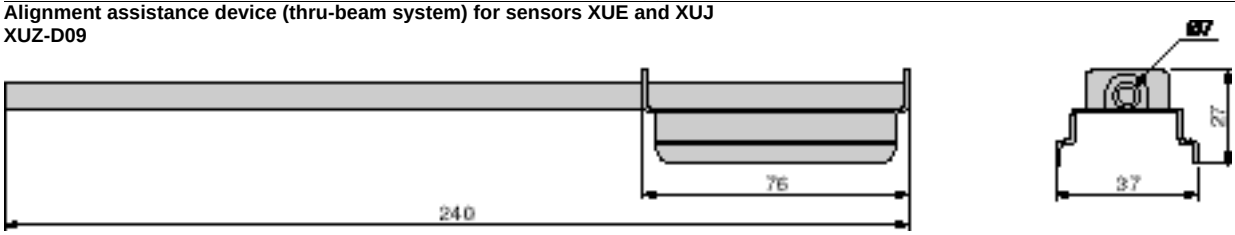

References :
pages 30180/2 to 30180/4