Mounting and cabling accessories
Notched uprights for fixing mounting plates and rails

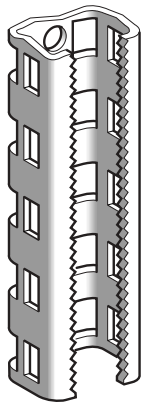

AM3-EC

Pre-drilled notched uprights

Application	Material and surface treatment	Height	Sold in lots of	Unit reference	Weight
		mm			kg
Adjustable fixing centres between rows of equipment: - in 2.5 mm steps (by notches) - in 25 mm steps	2 mm sheet steel, treated with zinc chromate	1075	2	**AM3-EC105**	1.800
		1475	2	**AM3-EC145**	2.500
		1675	2	**AM3-EC165**	2.700
		1875	2	**AM3-EC185**	3.000

Notched 1/4 turn sliding clip nuts *(5)*

Type	Sold in lots of	Unit reference	Weight kg
M6	10	**AF1-CD6**	0.053
M8	10	**AF1-CD8**	0.053
M10	10	**AF1-CD10**	0.053

Clip nuts (indexed) *(5)*

Type	Sold in lots of	Unit reference	Weight kg
M6	50	**AA3-AA06**	0.010
M8	50	**AA3-AA08**	0.010

Associated screws *(5)*

Type	Sold in lots of	Unit reference	Weight kg
M6 x 12 *(1)*	100	**AF1-VA612**	0.005
M6 x 18 *(1)*	100	**AF1-VA618**	0.006
M8 x 20 *(2)*	10	**AF1-VC820**	0.024
M10 x 20 *(4)*	10	**AF1-VC10**	0.033

Associated screws *(5)*

Type	Sold in lots of	Unit reference	Weight kg
M6 x 12 *(1)*	100	**AF1-VA612**	0.005
M6 x 18 *(1)*	100	**AF1-VA618**	0.006
M8 x 20 *(2)*	10	**AF1-VC820**	0.024

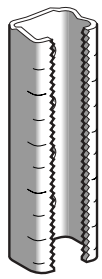

AM1-EC●●●

Notched uprights

Application	Material and surface treatment	Height	Sold in lots of	Unit reference	Weight
		mm			kg
Adjustable fixing centres between rows of equipment: in 2.5 mm steps	2 mm sheet steel, treated with zinc chromate	900	2	**AM1-EC090**	1.350
		1150	2	**AM1-EC115**	1.770
		2000	2	**AM1-EC200**	2.980

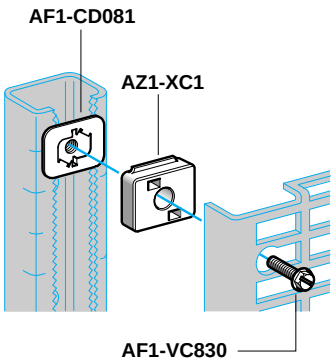

Hardware and accessories (for fixing mounting plates and rails on notched uprights)

1/4 turn clip nuts *(6)*

Type	Sold in lots of	Unit reference	Weight kg
M6	10	**AF1-CD061**	0.020
M8	10	**AF1-CD081**	0.020
M10	10	**AF1-CD101**	0.020

Associated screws *(5)*

Type	Sold in lots of	Unit reference	Weight kg
M6 x 12 *(1)*	100	**AF1-VA612**	0.005
M6 x 18 *(1)*	100	**AF1-VA618**	0.006
M8 x 20 *(2)*	10	**AF1-VC820**	0.024
M8 x 30 *(3)*	10	**AF1-VC830**	0.025
M10 x 20 *(4)*	10	**AF1-VC10**	0.033

Spacer

for mounting plates (Ø 8 fixing) *(5)*	10	**AZ1-XC1**	0.013

Bracket

for mounting rails at an angle (Ø 6 fixing) (5)	10	**DZ5-MS10**	0.020

(1) Screw with captive washer and slotted hexagon head.
(2) Screw with hexagon head and contact washer.
(3) Screw with hexagon head and contact washer (for fixing mounting plate AM1-PA●●● on nut AF1-CD081 and spacer AZ1-XC1.
(4) Cylindrical, hexagon socket head screw with lock washer.
(5) Steel treated with zinc chromate
(6) Steel treated with zinc chromate, stainless steel nut cage.

Dimensions :
pages 13300/11 to 13300/15

Mounting and cabling accessories

Pre-drilled uprights for fixing mounting plates and rails

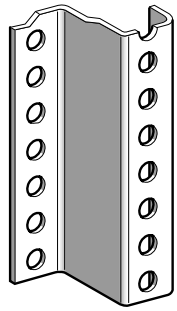

DZ6-MZ●●●

Pre-drilled uprights *(1)*

Application	Material and surface treatment	Height	Sold in lots of	Unit reference	Weight
		mm			kg
Adjustable fixing centres between rows of equipment: - in 20 mm steps by Ø 11 mm holes	2 mm sheet steel, treated with zinc chromate	1020	4	**DZ6-MZ121**	2.330
		1320	4	**DZ6-MZ151**	2.850
		1420	4	**DZ6-MZ161**	2.920
		1620	4	**DZ6-MZ181**	3.375
		1820	4	**DZ6-MZ200**	3.750
		1920	4	**DZ6-MZ211**	4.000

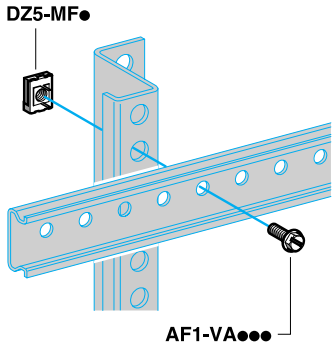

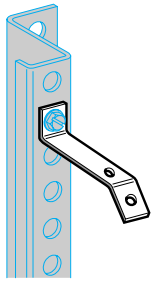

DZ5-MS10

Hardware and accessories (for fixing mounting plates and rails on pre-drilled uprights)

Notched clamp nuts *(5)*

Type	Sold in lots of	Unit reference	Weight kg
M6	100	**DZ5-MF6**	0.007
M8	100	**DZ5-MF8**	0.008

Associated screws *(5)*

Type	Sold in lots of	Unit reference	Weight kg
M6 x 12 *(2)*	100	**AF1-VA612**	0.005
M6 x 18 *(2)*	100	**AF1-VA618**	0.006
M8 x 20 *(3)*	10	**AF1-VC820**	0.024

Description	Rail mounting	Sold in lots of	Unit reference	Weight kg
Bracket for mounting rails and terminal blocks at an angle (Ø 6 *fixing) (5)*	DZ6-MZ AM1-EC AM3-EC	10	**DZ5-MS10**	0.020

(1) Uprights for building chassis for use in:
- metal enclosures type ACM: see pages 13095/2 and 13095/3,
- insulated dust and water-tight enclosures type AC4: see page 13100/3,
- insulated dust and water-tight enclosures type ACP: see pages 13104/3 and 13104/5
- enclosures types AA3 and AA4 (see pages 13147/3 and 13151/3).
(2) Screw with captive washer and slotted hexagon head.
(3) Screw with hexagon head and contact washer.
(4) Cylindrical, hexagon socket head screw with lock washer.
(5) Steel treated with zinc chromate.

Dimensions :
pages 13300/11 to 13300/15

Mounting and cabling accessories
Telequick pre-slotted mounting plates

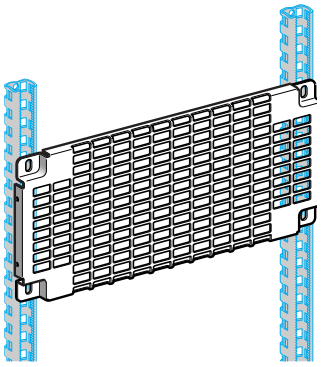

AM3-PA●●●●●

Telequick pre-slotted mounting plates AM3-PA (suitable for vertical butt mounting) *(1) (2)*

Fixing centres		Overall dimensions		Total area	Reference	Weight
Width	Height	Width	Height			
mm	mm	mm	mm	dm²		kg
450	200	508	225	11.4	**AM3-PA2045**	0.950
	425	508	450	22.8	**AM3-PA4045**	2.600
	575	508	600	30.4	**AM3-PA6045**	2.400
	800	508	825	41.9	**AM3-PA8045**	3.400
650	200	708	225	15.9	**AM3-PA2065**	1.300
	425	708	450	31.8	**AM3-PA4065**	2.600
	575	708	600	42.4	**AM3-PA6065**	3.400
	800	708	825	58.4	**AM3-PA8065**	4.700
850	200	908	225	20.4	**AM3-PA2085**	1.600
	425	908	450	40.8	**AM3-PA4085**	3.300
	575	908	600	54.4	**AM3-PA6085**	4.400
	800	908	825	74.9	**AM3-PA8085**	6.000
1050	200	1108	225	24.9	**AM3-PA20105**	2.500
	425	1108	450	49.9	**AM3-PA40105**	4.000
	575	1108	600	66.5	**AM3-PA60105**	5.500
	800	1108	825	91.5	**AM3-PA80105**	7.100

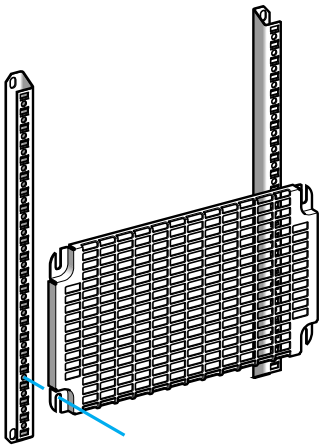

AM3-PA36

Telequick pre-slotted mounting plates *(1) (2)*

For small size equipment

Fixing centres		Overall dimensions		Total area	Reference	Weight
Height	Width	Height	Width			
mm	mm	mm	mm	dm²		kg
225	125	255	154	3.92	**AM3-PA32**	0.340
	175	253	228	5.76	**AM3-PA325**	0.400
	525	255	551	14	**AM3-PA36**	1.200
	725	255	751	19.1	**AM3-PA38**	1.500
325	175	349	228	7.95	**AM3-PA425**	0.520
	225	349	251	8.75	**AM3-PA43**	0.730
	325	345	351	12.1	**AM3-PA44**	0.990
425	225	454	251	11.3	**AM3-PA53**	0.930
	325	450	351	15.7	**AM3-PA54**	1.300
525	325	555	351	19.4	**AM3-PA64**	1.550
	425	555	451	25	**AM3-PA65**	1.950
	525	555	551	30.5	**AM3-PA66**	2.400
625	425	645	451	29	**AM3-PA75**	2.300
	525	645	551	35.5	**AM3-PA76**	2.750
725	525	750	551	41.3	**AM3-PA86**	3.150
	725	750	751	56.3	**AM3-PA88**	4.000
825	625	855	651	55.6	**AM3-PA97**	3.900
925	725	945	751	70.9	**AM3-PA108**	5.000
1125	725	1145	751	85.9	**AM3-PA128**	6.250

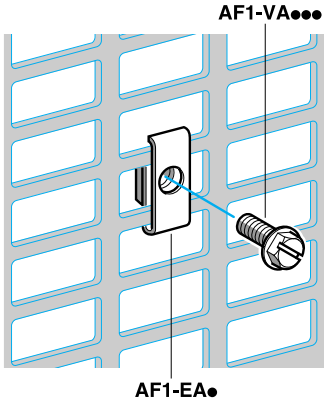

Equipment fixing hardware

Snap-on clip nuts *(2)*

Type	Sold in lots of	Unit reference	Weight kg
M3	100	**AF1-EA3**	0.005
M4	100	**AF1-EA4**	0.005
M5	100	**AF1-EA5**	0.008
M6	100	**AF1-EA6**	0.008

Associated screws *(2)*

Type	Sold in lots of	Unit reference	Weight kg
–	–	–	–
M4 x 10 (3)	100	**AF1-VA410**	0.002
M4 x 16 (3)	100	**AF1-VA416**	0.002
M5 x 12 (3)	100	**AF1-VA512**	0.003
M5 x 18 (3)	100	**AF1-VA518**	0.004
M6 x 12 (3)	100	**AF1-VA612**	0.005
M6 x 18 (3)	100	**AF1-VA618**	0.006

(1) 2 mm sheet steel. Suitable for vertical butt mounting, to provide a maximum usable area over the whole height of the chassis. For fitting in enclosures AA2 (see pages 13151/4 and 13151/5) and AA3 (see pages 13147/5 to 13148/2).
(2) Steel treated with zinc chromate.
(3) Screw with captive washer and slotted hexagon head.

Dimensions :
pages 13300/11 to 13300/15

Mounting and cabling accessories
Telequick pre-slotted mounting plates

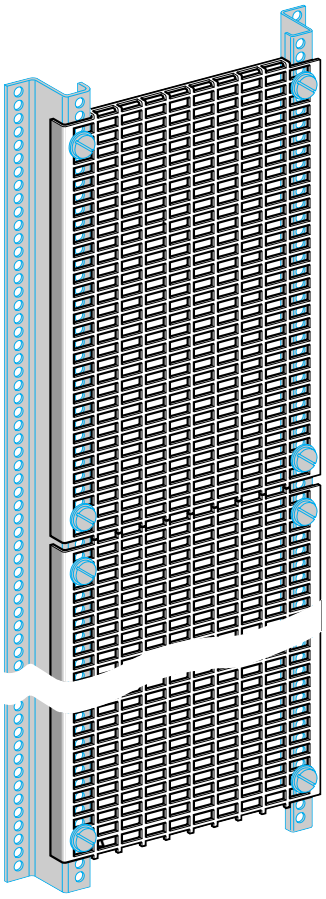

AM1-PA●●●

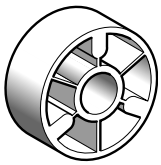

AZ1-CA04

Telequick pre-slotted mounting plates type AM1-PA (suitable for vertical butt mounting) (1)

These mounting plates, made of 2 mm sheet steel treated with zinc chromate, are suitable for vertical butt mounting to provide a maximum usable area over the whole height of the chassis.

Fixing centres		Overall dimensions		Total area	Reference	Weight
Width	Height	Width	Height			
mm	mm	mm	mm	dm²		kg
400	60	434	120	5.2	**AM1-PA0640** (3)	0.410
	120	434	180	7.8	**AM1-PA1240** (3)	0.590
	300	434	360	15.5	**AM1-PA3040**	1.100
	600	434	660	28.5	**AM1-PA6040**	1.960
	900	434	960	41.5	**AM1-PA9040**	2.810
500	60	534	120	6.3	**AM1-PA0650**	0.510
	120	534	180	9.5	**AM1-PA1250**	0.720
	300	534	360	19.1	**AM1-PA3050**	1.360
	600	534	660	35.1	**AM1-PA6050**	2.410
	900	534	960	51.5	**AM1-PA9050**	3.470
600	60	634	120	7.6	**AM1-PA0660** (3)	0.610
	120	634	180	11.4	**AM1-PA1260** (3)	0.860
	300	634	360	22.7	**AM1-PA3060**	1.610
	600	634	660	41.7	**AM1-PA6060**	2.870
	900	634	960	60.7	**AM1-PA9060**	4.130
700	60	734	120	8.7	**AM1-PA0670** (3)	0.660
	120	734	180	13.1	**AM1-PA1270**	0.940
	300	734	360	26.3	**AM1-PA3070**	1.760
	600	734	660	48.3	**AM1-PA6070**	3.130
	900	734	960	70.3	**AM1-PA9070**	4.490

Telequick pre-slotted mounting plates (1)

For small size equipment

Fixing centres		Overall dimensions		Total area	Reference	Weight
Height	Width	Height	Width			
mm	mm	mm	mm	dm²		kg
195	150	244	228	5.5	**AM1-PA2015** (3)	0.450
300	150	349	228	7.9	**AM1-PA3015** (3)	0.620
	195	349	258	9	**AM1-PA3020**	0.700
405	200	465	234	10.7	**AM1-PA4020**	0.890
	300	465	334	15	**AM1-PA4030**	1.220
495	300	555	334	18	**AM1-PA5030**	1.440
	400	555	434	24	**AM1-PA5040**	1.660
600	400	660	434	28	**AM1-PA6040**	1.960
	500	660	534	35	**AM1-PA6050**	2.410
705	500	765	534	40	**AM1-PA7050**	2.780
795	600	855	634	54	**AM1-PA8060**	3.690
900	700	960	734	70	**AM1-PA9070**	4.490

Telequick heavy duty pre-slotted mounting plates

Equipment fixing accessories, see page opposite

900	700	955	724	69	**AM1-PS9070**	4.620
1095	700	1150	724	83	**AM1-PS11070**	5.640

Spacer (thickness: 10 mm) (2)

Application	Sold in lots of	Unit reference	Weight kg
For fixing mounting plate AM1-PA	4	**AZ1-CA04**	0.013

(1) Telequick pre-slotted mounting plates (supplied with 4 clamping washers) for mounting:
- in insulated dust and water-tight enclosures type ACP: see page 13104/5 or type AC4: see page 13100/3
- in enclosures type AA4: see pages 13300/4 to 13300/7.
(2) Steel treated with zinc chromate.
(3) Sold in lots of 10.

Dimensions :
pages 13300/11 to 13300/15

Mounting and cabling accessories
Mounting rails for fixing equipment

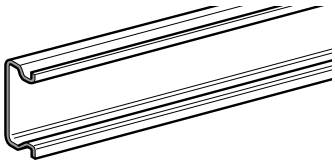

AM1-ED201

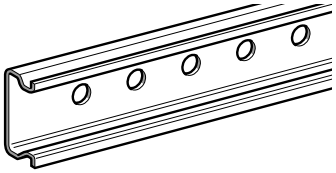

AM1-ED●00

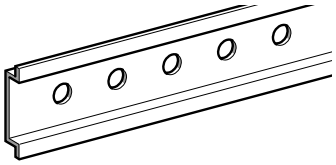

AM1-DP200

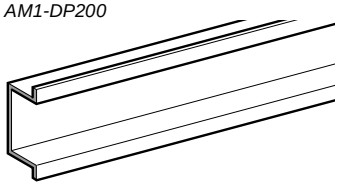

AM1-DE200

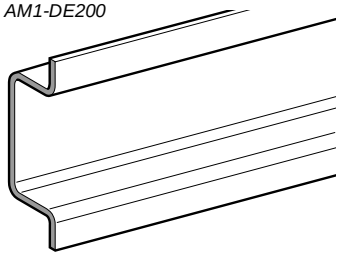

AM1-DL200

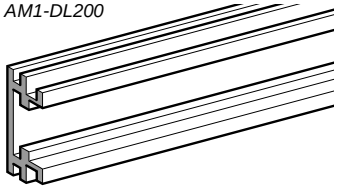

AM1-EC200

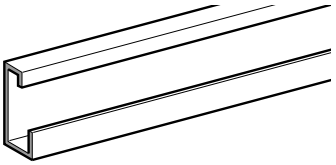

DZ5-MB●01

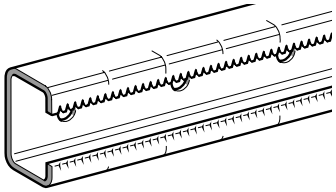

AM1-EC200

For clip-on mounting or screw fixing of equipment

Width	Material and surface treatment	Depth	Fixing centres min.	Fixing centres max.	Length	Sold in lots of	Unit reference	Weight
mm	mm	mm	mm	mm	mm			kg
Combination rails								
35	1.5 mm steel, zinc chromate	15	200	225	250	10	**AM1-ED021**	0.210
			300	325	350	10	**AM1-ED031**	0.310
			400	425	450	10	**AM1-ED041**	0.390
			500	525	550	10	**AM1-ED051**	0.480
			450	550	590	10	**AM1-ED055**	0.660
			600	625	650	10	**AM1-ED061**	0.580
			650	750	790	10	**AM1-ED075**	0.870
			700	725	750	10	**AM1-ED071**	0.670
			850	950	990	10	**AM1-ED095**	1.100
			1050	1150	1190	10	**AM1-ED115**	1.320
			(1)	*(1)*	2000	10	**AM1-ED201**	2.200
	1 mm steel, zinc chromate	15	–	–	2000	10	**AM1-ED200**	1.310

Clip-on mounting - Omega rails

35 EN 50022 and NF C 63-015 (pre-drilled)	1 mm steel, zinc chromate	7.5	–	–	2000	10	**AM1-DP200**	0.650
	galvanised	7.5	–	–	2000	10	**AM1-DR200**	0.650
35	1.5 mm steel, zinc chromate	15	–	–	2000	10	**AM1-DE200**	0.900
35	1.8 mm aluminium	16	–	–	2000	10	**AM1-EA200**	0.860
75 EN 50023 and NF C 63-016	3 mm steel, zinc chromate	25	–	–	2000	4	**AM1-DL200**	5.200
75	2 mm steel, zinc chromate	15	–	–	2000	6	**AM1-DL201**	3.000

Screw fixing

Asymmetrical rail

32 EN 50035 and NF C63-018	1.5 mm steel, zinc chromate	15	–	–	2000	10	**DZ5-MB201**	1.500

Notched rails used to support equipment

40	2 mm steel, zinc chromate	25	–	–	2000	2	**AM1-EC200**	2.980

(1) No set fixing centres (drill to suit)

Other version Tool for cutting combination rails.
Please consult your Regional Sales Office.

Dimensions :
pages 13300/11 to 13300/15

Mounting and cabling accessories
Equipment fixing hardware

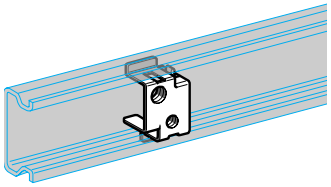

AF1-CF●●

On combination rails AM1-ED

1/4 turn sliding clip nuts *(1)*

Type	Sold in lots of	Unit reference	Weight kg
M3 and M4	100	**AF1-CF34**	0.010
M5 and M6	100	**AF1-CF56**	0.010

Associated screws *(1)*

Type	Sold in lots of	Unit reference	Weight kg
M4 x 10 *(2)*	100	**AF1-VA410**	0.002
M4 x 16 *(2)*	100	**AF1-VA416**	0.002
M5 x 12 *(2)*	100	**AF1-VA512**	0.003
M5 x 18 *(2)*	100	**AF1-VA518**	0.004
M6 x 12 *(2)*	100	**AF1-VA612**	0.005
M6 x 18 *(2)*	100	**AF1-VA618**	0.006

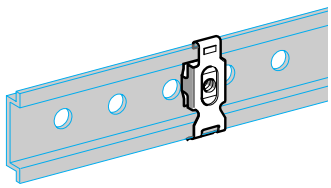

AF1-CG●●

On Omega rails AM1-DE or DP or on combination rails AM1-ED

Clip nuts for use on outside of rails

M4	100	**AF1-CG4**	0.007
M5	100	**AF1-CG5**	0.007
M6	100	**AF1-CG6**	0.007

Associated screws *(1)*

Type	Sold in lots of	Unit reference	Weight kg
M4 x 10 *(2)*	100	**AF1-VA410**	0.002
M4 x 16 *(2)*	100	**AF1-VA416**	0.002
M5 x 12 *(2)*	100	**AF1-VA512**	0.003
M5 x 18 *(2)*	100	**AF1-VA518**	0.004
M6 x 12 *(2)*	100	**AF1-VA612**	0.005
M6 x 18 *(2)*	100	**AF1-VA618**	0.006

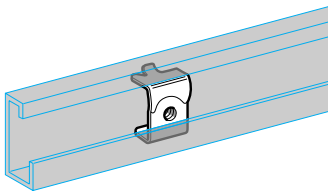

DZ5-ME●

On asymmetrical rails DZ5-MB

1/4 turn sliding clip nuts *(1)*

M4	100	**DZ5-ME8**	0.009
M5	100	**DZ5-ME9**	0.009
M6	100	**DZ5-ME5**	0.009

Associated screws *(1)*

Type	Sold in lots of	Unit reference	Weight kg
M4 x 10 *(2)*	100	**AF1-VA410**	0.002
M4 x 16 *(2)*	100	**AF1-VA416**	0.002
M5 x 12 *(2)*	100	**AF1-VA512**	0.003
M5 x 18 *(2)*	100	**AF1-VA518**	0.004
M6 x 12 *(2)*	100	**AF1-VA612**	0.005
M6 x 18 *(2)*	100	**AF1-VA618**	0.006

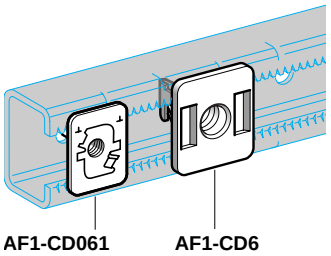

AF1-CD061 **AF1-CD6**

On notched rails AM1-EC

1/4 turn sliding clip nuts *(5)*

M6	10	**AF1-CD061**	0.020
M8	10	**AF1-CD081**	0.020
M10	10	**AF1-CD101**	0.020

Associated screws *(1)*

Type	Sold in lots of	Unit reference	Weight kg
M6 x 12 *(2)*	100	**AF1-VA612**	0.005
M6 x 18 *(2)*	100	**AF1-VA618**	0.006
M8 x 20 *(3)*	10	**AF1-VC820**	0.024
M10 x 20 *(4)*	10	**AF1-VC10**	0.033

1/4 turn notched sliding clip nuts *(1)*

M6	10	**AF1-CD6**	0.053
M8	10	**AF1-CD8**	0.053
M10	10	**AF1-CD10**	0.053

Associated screws *(1)*

Type	Sold in lots of	Unit reference	Weight kg
M6 x 12 *(2)*	100	**AF1-VA612**	0.005
M6 x 18 *(2)*	100	**AF1-VA618**	0.006
M8 x 20 *(3)*	10	**AF1-VC820**	0.024
M10 x 20 *(4)*	10	**AF1-VC10**	0.033

Sliding clip nuts, clipping on from front *(1)*

M5	10	**AF1-CH5**	0.006

Associated screws *(1)*

Type	Sold in lots of	Unit reference	Weight kg
M5 x 12 *(2)*	100	**AF1-VA512**	0.003
M5 x 18 *(2)*	100	**AF1-VA518**	0.004

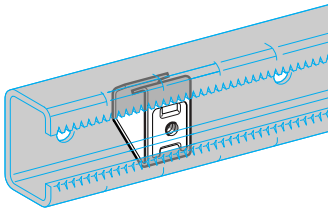

AF1-CH5

Self-piercing hexagon head screw with flange

M4.8 x 16	100	**AF1-VT516**	0.003

Self-tapping screw (Taplite TCBL Pozidrive)

M6 x 10	100	**TA1-ZL02**	0.003

(1) Steel treated with zinc chromate.
(2) Screw with captive washer and slotted hexagon head.
(3) Screw with hexagon head and contact washer.
(4) Cylindrical, hexagon socket head screw with lock washer.
(5) Steel treated with zinc chromate, stainless steel nut cage.

Dimensions :
pages 13300/11 to 13300/15

Mounting and cabling accessories
Cable ducting

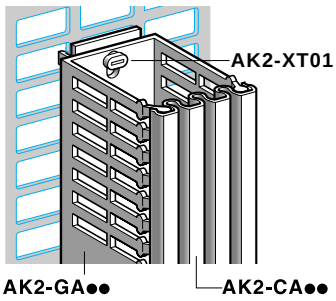

Slotted cable ducting. Colour: blue RAL 5000

In rigid PVC with opening side slots and perforations in base. Conforming to NF C 68-102.
Length: 2 m. *(3)*

Fixing	Width	Height	Capacity *(1)* N° of 1.5 mm²	Sold in lots of	Unit reference	Weight
	mm	mm	wires			kg
Clip-on or screw fixing on mounting plate or 35 mm "omega" or "combination" rail	30	35	60	8	**AK2-GA33**	0.500
		55	110	8	**AK2-GA35**	0.800
		90	200	8	**AK2-GA39**	1.120
	60	55	230	8	**AK2-GA65**	0.900
		90	400	8	**AK2-GA69**	1.200
	120	80	700	8	**AK2-GC128**	1.410
On one DZ6-MZ upright	30	144	340	8	**AK2-GA315**	1.600
Between 2 DZ6-MZ uprights	60	144	550	8	**AK2-GA615**	1.700

Ducting covers. Colour: blue RAL 5000 (rigid PVC, length 2 m) *(3)*

For use with		Sold in lots of	Unit reference	Weight kg
Cable ducting	AK2-GA33, GA35, GA39, GA315	8	**AK2-CA3**	0.200
	AK2-GA65, GA69, GA615	8	**AK2-CA6**	0.430
	AK2-GC128	8	**AK2-CC12**	0.610

Clip mounts for ducting (black Polyamide) *(2)*

Clip-on fixing	For use with slotted cable ducting	Sold in lots of	Unit reference	Weight kg
On pre-slotted mounting plate or on 35 mm "omega" or "combination" rail	AK2-GA (blue RAL 5000) or AK2-GD (grey RAL 7030)	20	**AK2-XT01**	0.010

This clip mount has a locking device which secures the ducting through the Ø 6.5 x 14 mm slots.

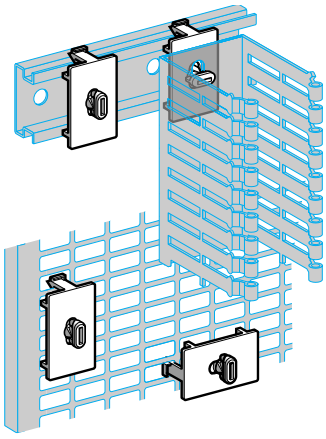

AK2-XT01

Slotted cable ducting. Colour: grey RAL 7030

In rigid PVC with opening side slots and perforations in base, length 2 m.
Conforming to standards: VDE 0660/506 and DIN 43659 *(3)*

Fixing	Width	Height	Capacity *(1)* N° of 1.5 mm²	Sold in lots of	Unit reference	Weight
	mm	mm	wires			kg
Clip-on or screw fixing on mounting plate or 35 mm "omega" or "combination" rail	25	25	25	8	**AK2-GD2525**	0.260
		50	65	8	**AK2-GD2550**	0.460
	37,5	50	110	8	**AK2-GD3750**	0.520
		75	160	8	**AK2-GD3775**	0.800
	50	50	160	8	**AK2-GD5050**	0.600
		75	240	8	**AK2-GD5075**	0.880
	75	50	250	8	**AK2-GD7550**	0.880
		75	400	8	**AK2-GD7575**	1.040
	100	75	550	8	**AK2-GD10075**	1.200
	125	75	700	8	**AK2-GD12575**	1.360

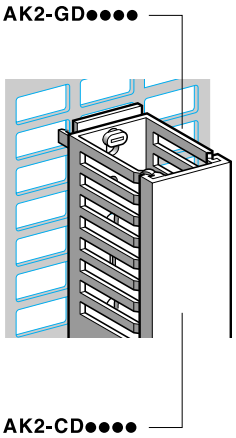

Ducting covers. Colour: grey RAL 7030 (rigid PVC, length 2 m) *(3)*

For use with		Sold in lots of	Unit reference	Weight kg
Cable ducting	AK2-GD2525, GD2550	8	**AK2-CD25**	0.160
	AK2-GD3750, GD3775	8	**AK2-CD37**	0.220
	AK2-GD5050, GD5075	8	**AK2-CD50**	0.280
	AK2-GD7550, GD7575	8	**AK2-CD75**	0.380
	AK2-GD10075	8	**AK2-CD100**	0.480
	AK2-GD12575	8	**AK2-CD125**	0.600

(1) Maximum capacity of H07-V-K/1.5 mm² flexible wires. Apply a fill coefficient of 0.60, without taking into account bending and overlapping of wires at ducting intersections.
(2) Flame resistance: VO material conforming to UL 94.
(3) Temperature resistance: - 5…+ 60 °C. Flame resistance: VO material conforming to UL 94.

Dimensions :
page 13300/14

Mounting and cabling accessories
Cabling accessories

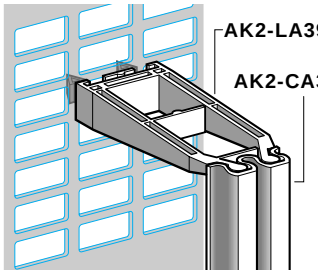

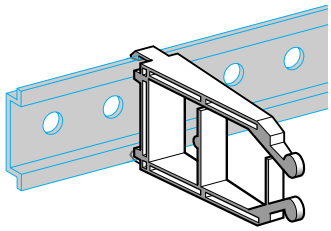

AK2-LD0●

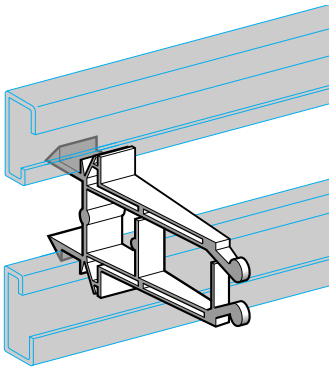

AK2-LB23

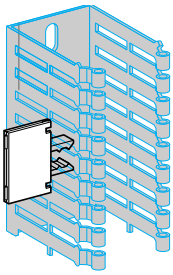

AR1-SA3

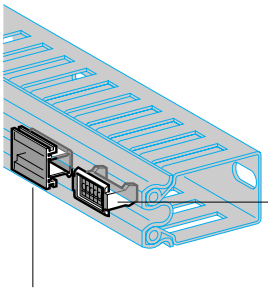

AR1-SB339187 **AR1-SA2**

Cable clips. Colour: black *(1)*

Clip-on	Fixing centres in mm	Capacity N° of 2.5 mm² wires	Sold in lots of	Unit reference	Weight kg
On Telequick® pre-slotted mounting plate	–	90	10	**AK2-LA39**	0.009
On 35 mm "Omega" or combination mounting rail	–	75	10	**AK2-LD02**	0.009
		90	10	**AK2-LD01**	0.009
Between 2 asymmetrical rails	60	75	10	**AK2-LB23**	0.009

Cable clip covers. Colour: blue RAL 5000 (rigid PVC, length 2 m)

For use with		Sold in lots of	Unit reference	Weight kg
Cable clips	AK2-LA39 (2), LD01 LD02, LB23	8	**AK2-CA3**	0.200

Marking accessories

Description	Sold in lots of	Unit reference	Weight kg
Legend plate carrier, translucent, supplied with blank paper legend *(1)* clip-on mounting on AK2-CA covers	10	**AR1-SB339187**	0.001
Marker holder black for 6 clip-in markers AB1-R or G (see page 13400/33) *(1)* clip-on mounting on AK2-CA covers	100	**AR1-SA2**	0.001
Self-adhesive marker holder (grey RAL 7032) for 6 clip-in markers AB1-R or G (for ducting covers AK2-CD)	50	**AR1-SB3**	0.001
Legend plate carrier *(3)* transparent clip-on mounting on sides of cable ducting AK2-GD (supplied with blank paper legends)	50	**AR1-SA3**	0.005

(1) Polyamide.

(2) These cable clips, which can be mounted in five different positions on pre-slotted mounting plates, can be fitted with covers AK2-CA6.

(3) Polycarbonate.

Other versions Cable clips with different wire capacities together with corresponding covers.

Please consult your Regional Sales Office.

Dimensions :
page 13300/14

Mounting and cabling accessories
Mounting accessories

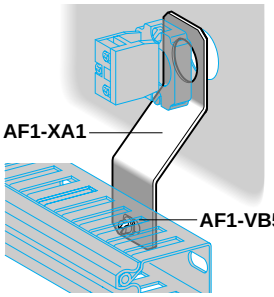

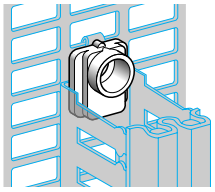
AF1-BA1

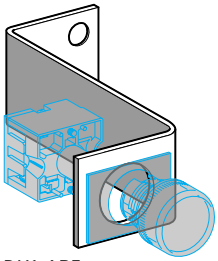
DX1-AP5●

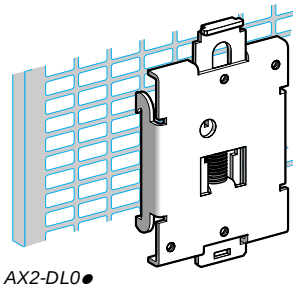
AX2-DL0●

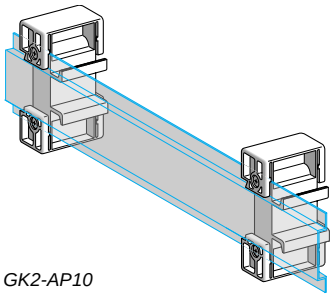
GK2-AP10

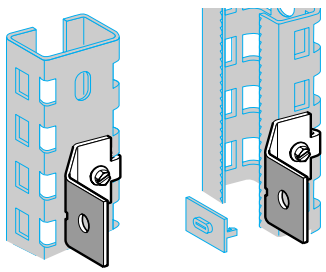
AF1-XC3

Fixing accessories

Description	Sold in lots of	Unit reference	Weight kg
Metal ducting support for Ø 22 control and signalling units, mounted on enclosure door *(1)* (ducting can be fixed with clip nuts AF1-EA5, see page 13300/4)	10	**AF1-XA1**	0.030
M5 x 10 screw, with insulated, slotted hexagon head, for fixing cable ducting	100	**AF1-VB510**	0.003
Universal fixing clamp for clamping ducting or rails *(2)* (clamp fixes onto support with M6 screw, not supplied)	10	**AF1-BA1**	0.003
Bracket for fixing control units *(1)* (Ø 31) on DIN rails	10	**DX1-AP51**	0.160
Bracket for fixing control units *(1)* (Ø 22) on DIN rails	10	**DX1-AP52**	0.160
Support plate for screw mounted equipment *(1)* (for mounting on 35 mm "omega" rails, "combination" rails or Telequick mounting plate)	10	**AX2-DL01**	0.060
		AX2-DL02	0.060
Adjustable spacer (Enclosure depth: up to 300 mm)	2	**GK2-AP10**	0.100

Cable ducting fixing lug

Screw fixing	For use on ducting clip mounts	Material, treatment, thickness	Sold in lots of	Unit reference	Weight kg
Metal bracket for mounting clip mount onto pre-drilled notched uprights AM3-EC●●● - flat *(3)* - edgewise *(4)*	AK2-XT01	Galvanized sheet steel	10	**AF1-XC3**	0.050

(1) Treated with zinc chromate.
(2) Polyamide.
(3) Using nut AA3-AA06 and screw AF1-VA612.
(4) Using nut AF1-EA6 and screw AF1-VA612.

Dimensions :
page 13300/15

Mounting and cabling accessories
Uprights and mounting rails

Uprights and rails | **Pre-drilled uprights notched** | **Pre-drilled uprights**

AM1-EC●●●

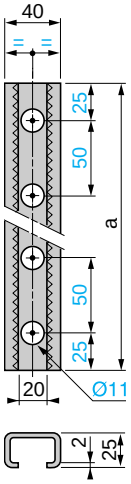

AM3-EC●●●

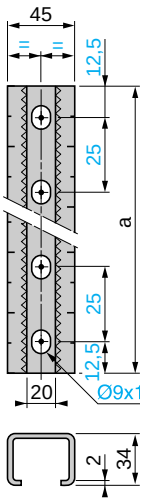

DZ6-MZ●●●

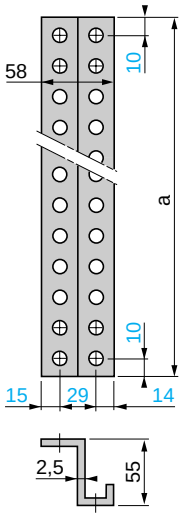

Uprights and mounting rails

AM1-EC	090	115	200
a	900	1150	2000

Pre-drilled notched uprights

AM3-EC	105	145	165	185
a	1075	1475	1675	1875

Pre-drilled uprights

DZ6-MZ	121	151	161	181	200	211
a	1020	1320	1420	1620	1820	1920

Combination rails AM1-ED0●1

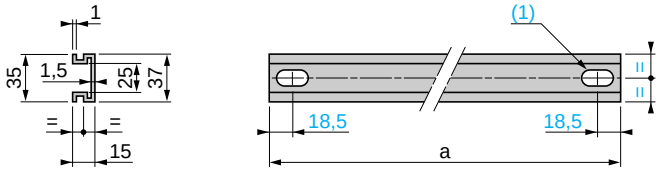

AM1-	ED021	ED031	ED041	ED051	ED061	ED071
a	250	350	450	550	650	750

(1) 2 elongated holes 6.5 x 19

Combination rails AM1-ED●●5

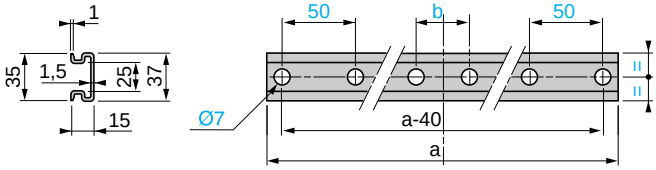

AM1-	ED055	ED075	ED095	ED115
a	590	790	990	1190
b	–	–	150	150
No. of Ø 7 holes	4	4	6	6

Combination rail AM1-ED201

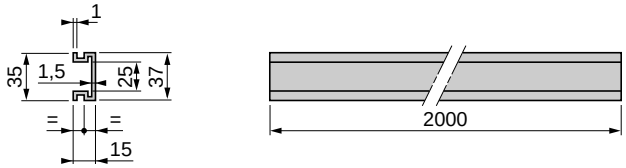

Combination rails AM1-ED200

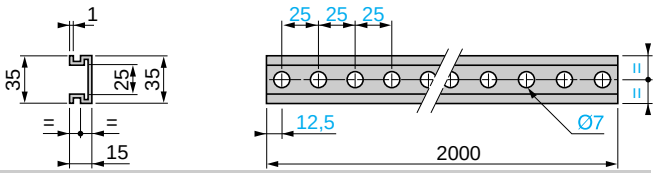

Aluminium rail AM1-EA200

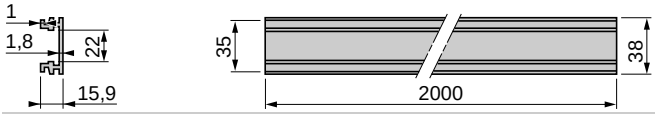

"Omega" rails AM1-DP200, DR200

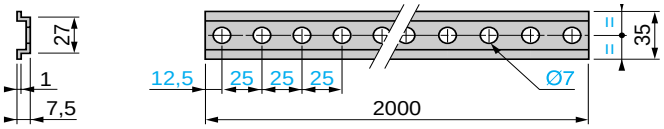

"Omega" rail AM1-DE200

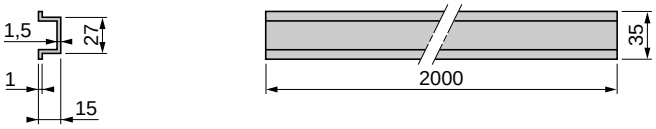

"Omega" rail AM1-DL200, DL201, Common front face view

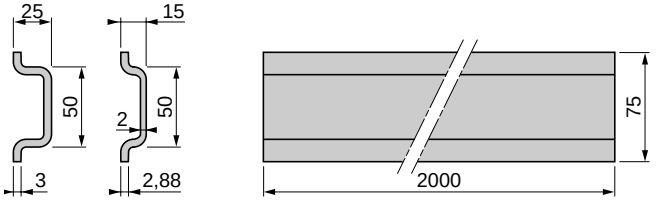

Asymmetrical rail DZ5-MB201

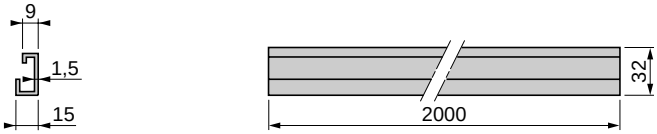

References :
pages 13300/2 to 13300/6

Mounting and cabling accessories
Pre-slotted mounting plates

Telequick pre-slotted mounting plates, suitable for vertical butt-mounting on uprights AM3-EC

AM3-PA●●●●

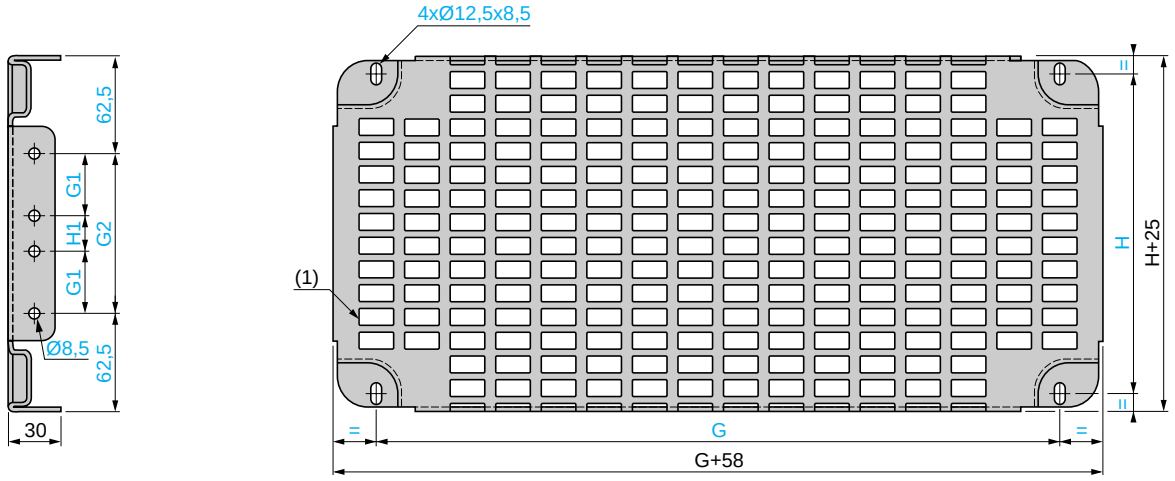

AM3-PA	2045	2065	2085	20105	4045	4065	4085	40105	6045	6065	6085	60105	8045	8065	8085	80105
G	450	650	850	1050	450	650	850	1050	450	650	850	1050	450	650	850	1050
G1	–	–	–	–	–	–	–	–	125	125	125	125	250	250	250	250
G2	100	100	100	100	325	325	325	325	475	475	475	475	700	700	700	700
H	200	200	200	200	425	425	425	425	575	575	575	575	800	800	800	800
H1	–	–	–	–	–	–	–	–	225	225	225	225	200	200	200	200

(1) ⌀ 11 x 26 on 15 x 30 pitch.

Pre-slotted mounting plates

AM3-PA●●●●

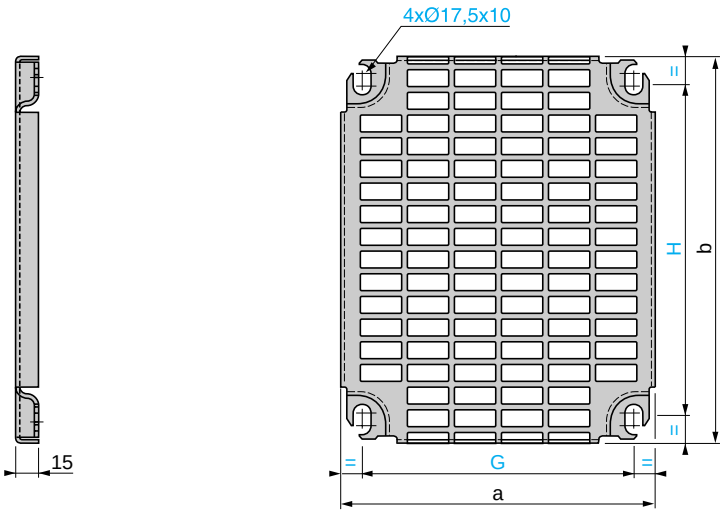

AM3-PA	32 *(2)*	325	36	38	425	43	44	53	54	64	65	66
a	154	228	551	751	228	251	351	251	351	351	451	551
b	255	253	255	255	349	349	345	454	450	555	555	555
G	125	175	525	725	175	225	325	225	325	325	425	525
H	225	225	225	225	325	325	325	425	425	525	525	525

AM3-PA	75	76	86	88	97	108	128
a	451	551	551	751	651	751	751
b	645	645	750	750	855	945	1145
G	425	525	525	725	625	725	725
H	625	625	725	725	825	925	1125

(1) ⌀ 11 x 26 on 15 x 30 pitch.
(2) Without fold and without stamping.

References :
page 13300/4

Mounting and cabling accessories
Pre-slotted mounting plates

Telequick pre-slotted mounting plates

AM1-PA2015

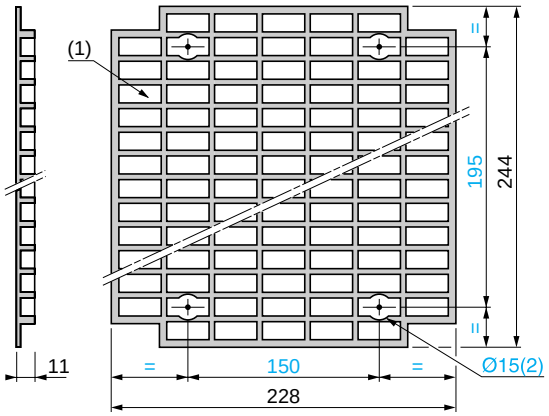

AM1-PA3015

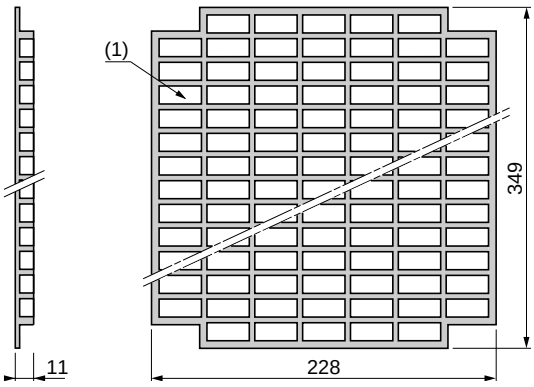

AM1-PA3020

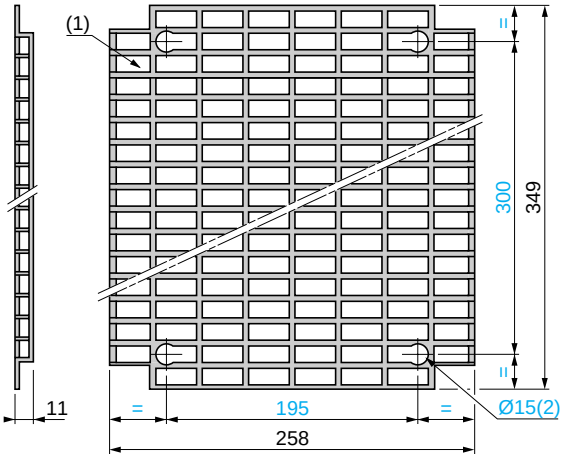

AM1-PA40●●, 50●●, 60●●, 7050, 8060, 9070

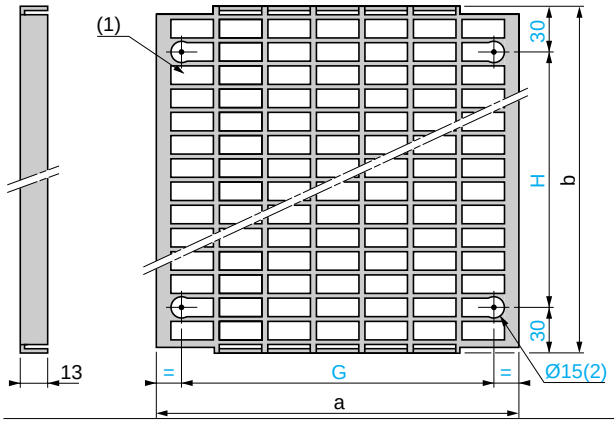

AM1-PA	4020	4030	5030	5040	6040	6050	7050	8060	9070
a	234	334	334	434	434	534	534	634	734
b	465	465	555	555	660	660	765	855	960
G	200	300	300	400	400	500	500	600	700
H	405	405	495	495	600	600	705	795	900

(1) ⧄ 11 x 26 on 15 x 30 pitch.

(2) Ø 15 for locating washers.

Telequick pre-slotted mounting plates (butt mountable) on uprights DZ6-MZ

AM1-PA●●●

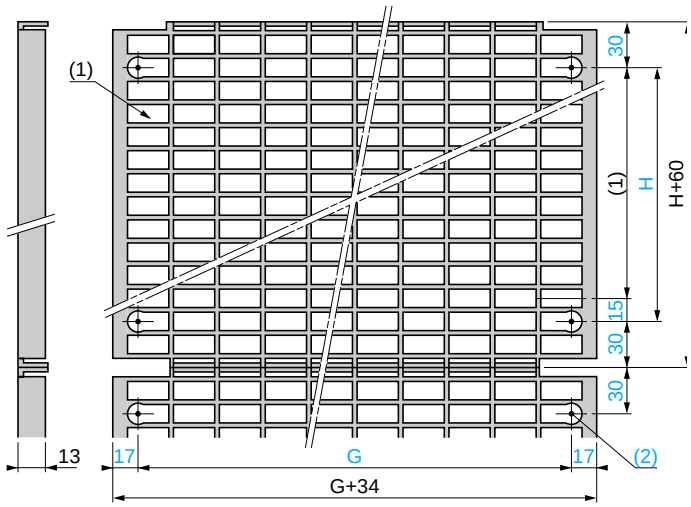

AM1-PA	0640	0650	0660	0670	1240	1250	1260	1270	3040	3050
G	400	500	600	700	400	500	600	700	400	500
H	60	60	60	60	120	120	120	120	300	300
AM1-PA	**3060**	**3070**	**6040**	**6050**	**6060**	**6070**	**9040**	**9050**	**9060**	**9070**
G	600	700	400	500	600	700	400	500	600	700
H	300	300	600	600	600	600	900	900	900	900

Telequick heavy duty pre-slotted mounting plates

AM1-PS●●●●

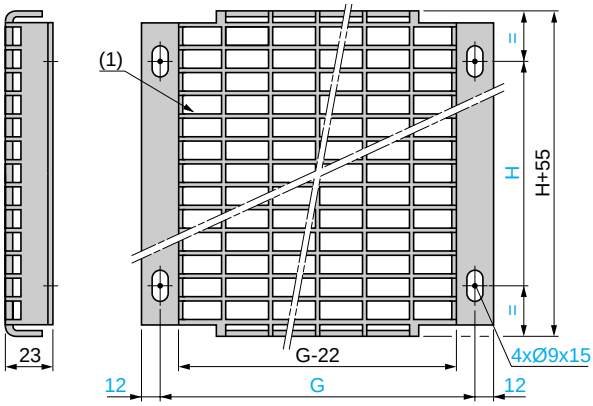

AM1-PS	9070	11070
G	700	700
H	900	1095

(1) ⧄ 11 x 26 on 15 x 30 pitch.

(2) Ø 15 for locating washers.

References :
page 13300/5

Mounting and cabling accessories
Cabling accessories

Cable ducting

AK5-JB●●●

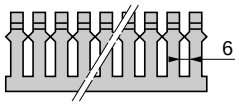

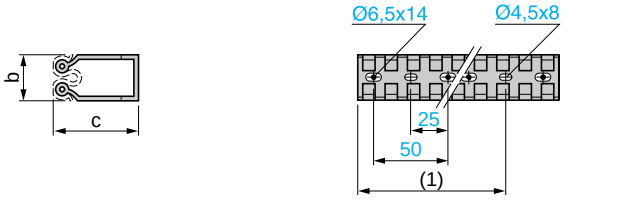

AK2-	GA33	GA35	GA65	GA39	GA69	GA315	GA615
b	30	30	60	30	60	30	60
c	35	55	55	90	90	144	144

(1) 2000 (15 mm pitch)

AK2-GD25●●, GD37●●, GD50●●

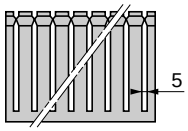

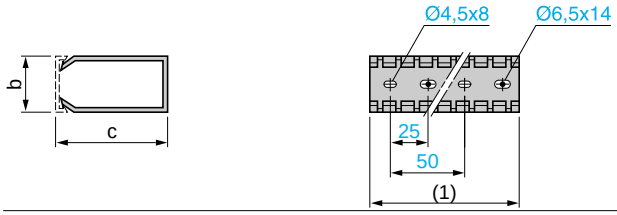

AK2-	GD2525	GD2550	GD3750	GD3775	GD5050	GD5075
b	23	23	35,5	35,5	48	48
c	23	48	48	73	48	73

(1) 2000 (12.5 mm pitch)

Cable ducting

AK2-GC128, GD75●●, GD1●●75

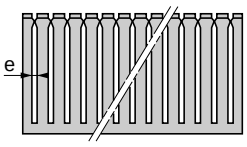

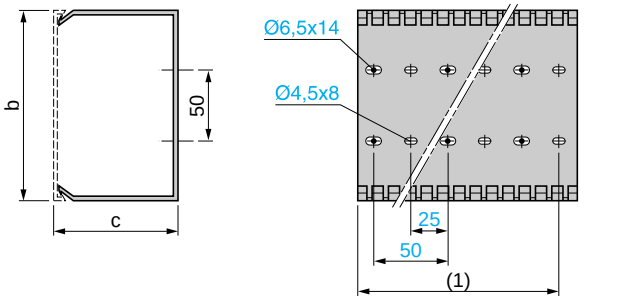

AK2-	GC128	GD7550	GD7575	GD10075	GD12575
b	120	73	73	98	123
c	80	48	73	73	73
e	4	5	5	5	5

(1) 2000 - AK2-GC128: 10 mm pitch, AK2-GD: 12.5 mm pitch

Cable ducting clip mounts

AK2-XT01



Ducting support

AF1-XA1

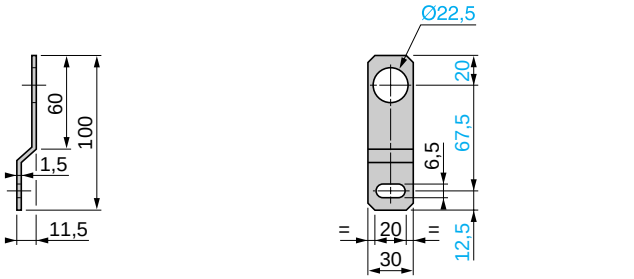

Cable clips

AK2-LA39

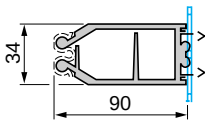

AK2-LD0●

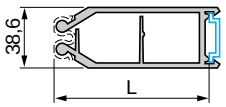

AK2-	LD02	LD01
L	85	103

AK2-LB23

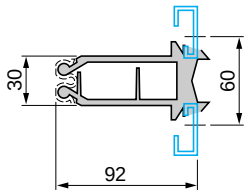

References :
pages 13300/8 and 13300/9

Support plates

AX2-DL01

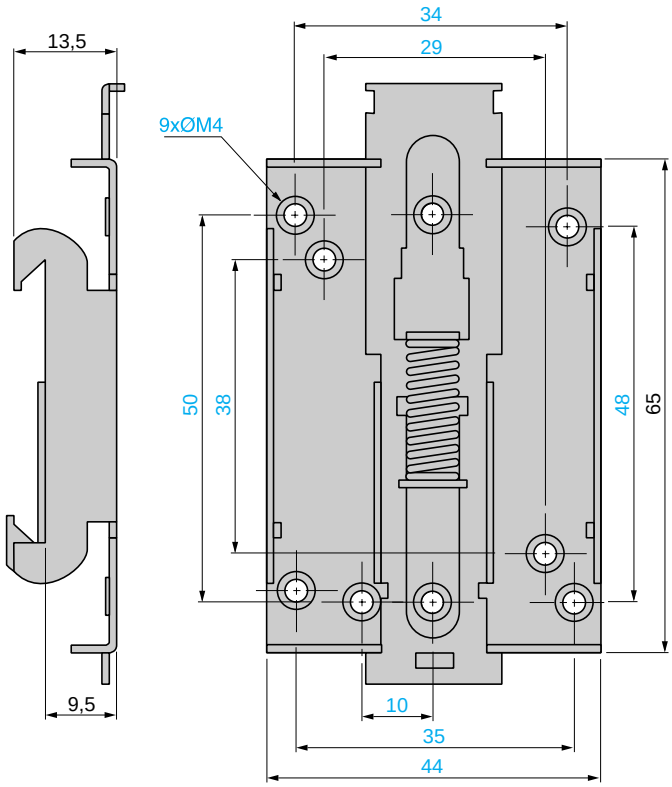

AX2-DL02

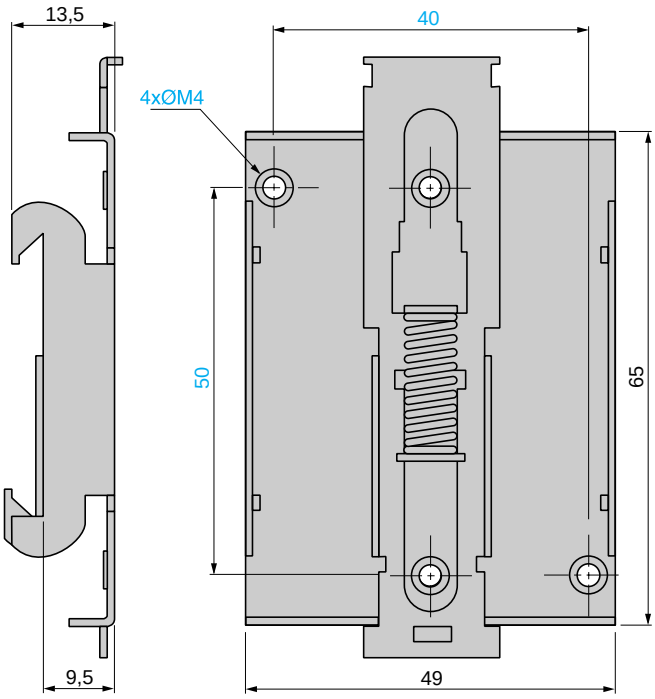

Brackets for fixing Ø 22 and Ø 31 control units

DX1-AP52

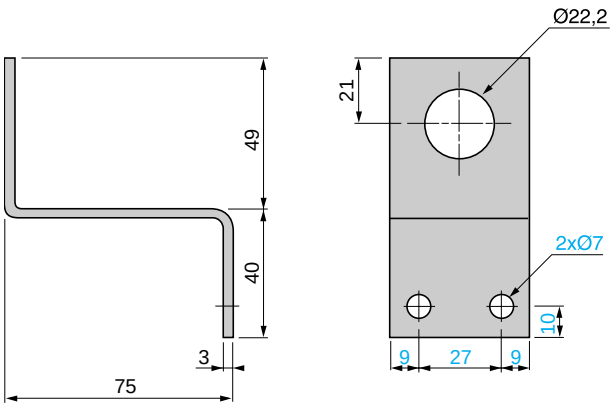

DX1-AP51

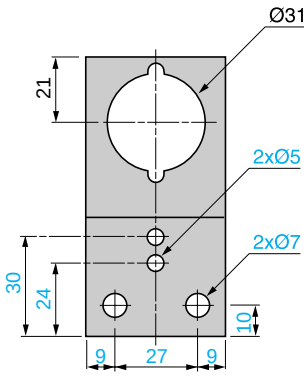

Adjustable spacer

GK2-AP10

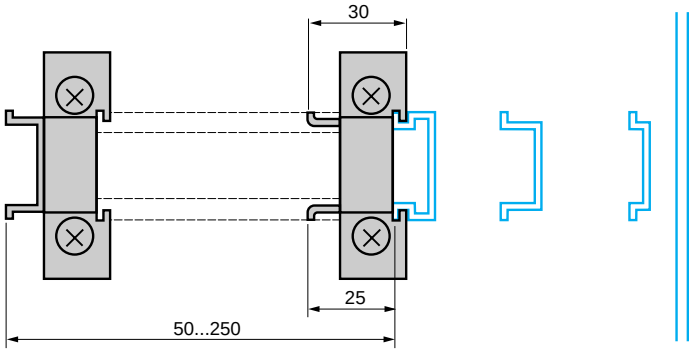

References :
page 13300/10