Composition accessories
Fixing accessories



Wall-fixing lugs

Set of 4 wall-fixing lugs
- Mounted directly on the rear of the enclosure, either in horizontal or vertical position.
- Two types of position, steel and 304 stainless-steel, for a wall-enclosure separation of 10 mm.
- Acceptable load:
– Horizontal lug: 180 kg.
– Vertical lug: 350 kg.
- Supplied with fixing screws and pre-mounted sealing gaskets.

Description	Reference
Set of 4 steel fixing lugs	**NSYAEFPFSC**
Set of 4 stainless-steel fixing lugs	**NSYAEFPFXSC**

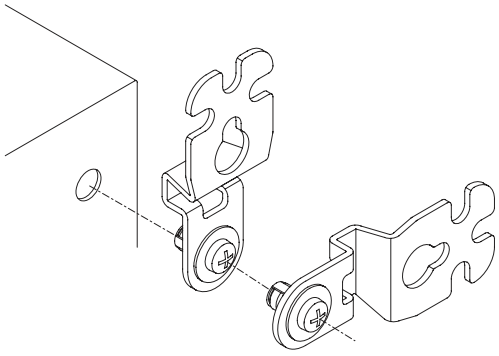

Installation from the outside.

Fixing centre-to-centre distance with lugs (M8 screw)

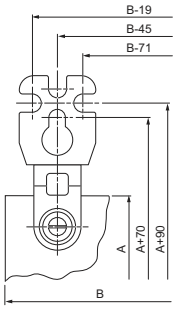

Vertical position.

A: Enclosure height
B: Enclosure width

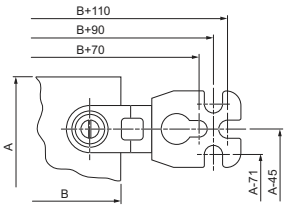

Horizontal position.

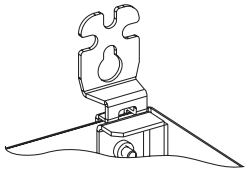

Kit for heavy loads

Kit made up of 2 steel reinforcement pieces.
- Maximum load, 400 kg.
- To be mounted before installing the mounting plate in top position with the standard lugs (to be ordered separately).

Description	Reference
Kit for heavy loads	**NSYAEFAHLBSC**

