MOELLER

Type: **NZMB2–A200**
Article No.: **259089**
Sales text **Circuit–breaker3p systems/cable prot.**



Ordering information			
Number of poles			3–pole
Description			Terminal screws standard, terminals as accessories
Rated current = rated uninterrupted current	I_u	A	200
Setting range			
Overload releases	I_r	A	160...200
Switching capacity			
Switching capacity		kA	25
Release system			Thermomagnetic release
Frame size			NZM2

Notes concerning the product group

IEC/EN 60947–2

Adjustable overload release I_r

- 0.8 ... 1 × I_n (ex–works 0.8 × I_n)

Adjustable short–circuit release I_i

- 6 ... 10 × I

n

- (ex–works 6 × I_n)

– NZM...–A40: 8 ... 10 × I_n (ex–works 8 × I_n)

Fixed short–circuit release I_i

- 350 A at I_n = 20 ... 32 A
- 1280 A at I_n = 160 A (NZM1)

Notes concerning the product group

Notes for terminals 262240

General			
Standards			IEC/EN 60947
Protection against direct contact			Finger and back of hand proof to VDE 0106 Part 100
Climatic proofing			Damp heat, constant, according to IEC 60068–2–78 Damp heat, cyclical to IEC 60068–2–30
Ambient temperature			
Ambient temperature, Storage		°C	... 25...+70
Operation		°C	... 25...+70
Mechanical shock resistance (IEC/EN 60068–2–27)			
Shock resistance		g	20 (half–sinusoidal shock 20 ms)
Safe isolation to VDE 0106 Part 101 and Part 101/A1			
Between auxiliary contacts and main contacts		V AC	500
between the auxiliary contacts		V AC	300
Dimensions			
Weight			
Weight		kg	2,345
Mounting position			
Direction of incoming supply			As required
Degree of protection			
Device			In the operating controls area: IP20 (basic degree of protection)

Enclosures			With insulating surround: IP40, with door coupling rotary handle: IP66
Terminations			Tunnel terminal: IP10 Phase isolator and strip terminal: IP00
Circuit–breakers			
Rated impulse withstand voltage U_{imp}			
Main contacts		V	8000
Auxiliary contacts		V	6000
Rated operational voltage	U_e	V AC	440
Overvoltage category/pollution degree			III/3
Rated insulation voltage	U_i	V	850
For use in IT electrical power networks		V	440
Switching capacity			
Rated short–circuit making capacity			
240 V	I_{cm}	kA	63
400/415 V	I_{cm}	kA	53
440 V	I_{cm}	kA	53
Rated short–circuit breaking capacity I_{cn}			
I_{cu} to IEC/EN 60947 operating sequence O–t–CO			
240 V 50/60 Hz	I_{cu}	kA	30
400/415 V 50/60 Hz	I_{cu}	kA	25
415 V AC	I_{cu}	kA	25
440 V 50/60 Hz	I_{cu}	kA	25
I_{cu} to IEC/EN 60947 operating sequence O–t–CO–t–CO			
240 V 50/60 Hz	I_{cs}	kA	30
400/415 V 50/60 Hz	I_{cs}	kA	25
415 V AC	I_{cs}	kA	25
up to 440 V 50/60 Hz	I_{cs}	kA	18,5
Maximum low–voltage h.b.c. fuse		A gG/gL	355
Technical data, divergent from the products for the IEC market Switching capacity NA switches (UL489, CSA 22.2 No. 5.1)			
240 V 60 Hz		kA	35

480V 60Hz		kA	25
600 V 60 Hz		kA	18
Utilization category to IEC/EN 60947–2			A
Lifespan, mechanical	Operations		20000
Maximum operating frequency			
Max. operating frequency		Ops/h	120
Lifespan, electrical			
AC–1			
400/415 V 50/60 Hz	Operations		10000
415 V	Operations		10000
AC––3			
400/415 V 50/60 Hz	Operations		6500
415 V	Operations		6500
Current heat loss per pole at I_u		W	19
Current heat loss (3–pole) at I_u		W	19
Overload releases			
to IEC/EN 60947, VDE 0660			
Temperature compensation to IEC/EN 60947 Residual error in the range –25 °C/+70 °C (reference temperature 30 °C)		%/K	0
Temperature compensation			0
Frequency range		ms	< 10
Terminal capacities			
Standard equipment			Screw terminal
Accessories			Box terminal Tunnel terminal Connection on rear
Rated power of coil			
Box terminal			
Solid		mm^2	1 × (4 – 16) 2 × (4 – 16)
Stranded		mm^2	1 × (25 – 185) 2 × (25 – 70)
Tunnel terminal			
Solid		mm^2	1 × 16
Stranded			
Single hole		mm^2	1 × (25 – 185)
Bolt terminal and rear–side connection			

Direct on the switch			
Solid		mm^2	1 × (4 – 16) 2 × (4 – 16)
Stranded		mm^2	1 × (25 – 185) 2 × (25 – 70)
Al conductors, Cu cable			
Tunnel terminal			
Solid		mm^2	1 × 16
Stranded			
Single hole		mm^2	1 × (25 – 185) je nach Kabelhersteller bis zu 240 mm^2 anschließbar
Bolt terminal and rear–side connection			
Direct on the switch			
Solid		mm^2	1 × (10 – 16) 2 × (10 – 16)
Stranded		mm^2	1 × (25 – 50) 2 × (25 – 50)
Cu strip (number of segments x width x segment thickness)			
Box terminal			
	min.	mm^2	2 × 9 × 0.8
	max.	mm^2	10 × 16 × 0.8
Bolt terminal and rear–side connection			
Flat copper strip, with holes	min.	mm	2 × 16 × 0.8
Flat copper strip, with holes	max.	mm	10 × 16 × 0.8
Copper busbar (width × thickness)			
Bolt terminal and rear–side connection			
Screw connection			M8
Direct on the switch			
	min.	mm^2	16 × 5
	max.	mm^2	20 × 5
Notes			
Notes			For rated operational voltage the following applies: DC voltage values on request For switching capacity of NA switches with NZM...1–...NA the following applies: 480Y/277 V from 60 A

			For rated operational current AC–3 at NZMB2, NZMN2, NZMH2, NZM4 the following applies: 400 V: max. 650 kW; 600 V: max. 600 kW For switching capacity of NA switches with NZML2 and NZML3 the following applies: current limiting switch to UL489 For overload release temperature compensation NZM2 thermomagnetic the following applies: with NZM1...1–...160: 0.4 For switching capacity of NA switches with NZML4 at 240 V 60 Hz the following applies: please enquire The current heat loss per pole ratings refer to the maximum current rating of the frame size.

Mounting position

Vertical and 90° in all directions

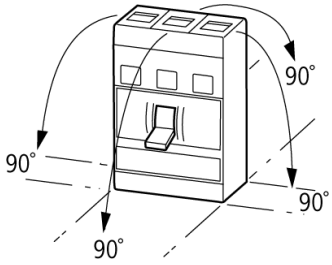

With plug–in adapter NZM2, N(S)2: vertical, 90° right/left

With withdrawable unit NZM3, N(S)3: vertical, 90° left NZM4, N(S)4: vertical with remote operator: NZM2, N(S)2, NZM3, N(S)3, NZM4, N(S)4: vertical and 90° to all directions

with residual current release NZM2: vertical and 90° to all directions

Overview

Basic equipment				
Box terminal	●	–	–	–
Screw connection	–	●	●	●
Accessories				
Box terminal	–	●	●	–
Screw connection	●	–	–	●
Tunnel terminal	●	●	●	●
Connection on rear	●	●	●	●
Flat conductor terminal	–	–	–	●

Notes

For rated operational voltage switching on 3 contacts the following applies: DC correction factor for instantaneous release response value NZM1: 1.25, NZM2: 1.35

Setting for I_i at DC = setting I_i AC/DC correction factor

Details apply for 3–pole system protection circuit–breaker with thermomagnetic release NZM(H)1(2)–A...

Switching of one pole via two series contacts

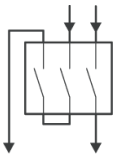

Switching of one pole via three series contacts

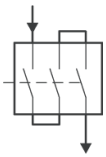

For NA switch switching capacity with NZM...1–...(C)NA the following applies: 480 Y/277 V from 60 A

For AC–3 rated operational current with NZM4 the following applies: 400 V: max. 650 kW; 690 V: max. 600 kW

For NA switch switching capacity with NZML2 and NZML3 the following applies: Current Limiting switch to UL489

For 3–pole system protection circuit–breaker the AC–3 specification is not applicable

For NA switch switching capacity with NZML4 at 240 V 60 Hz the following applies: on request

For current heat loss per pole the specification refers to the maximum nominal current of the frame size.

For 3–pole system protection circuit–breaker the following applies: 690 V

For 3–pole system protection circuit–breaker the following applies: 400/415 V 7500 switching operations

Maximum back–up fuse, if the expected short–circuit currents at the installation location exceed the switching capacity of the circuit–breaker.

$\leqq$ 1600 A

Higher switching capacity on request

Notes

XSV = plug–in unit

XAV = withdrawable unit

TM = thermomagnetic

E = electronic

Dimensions

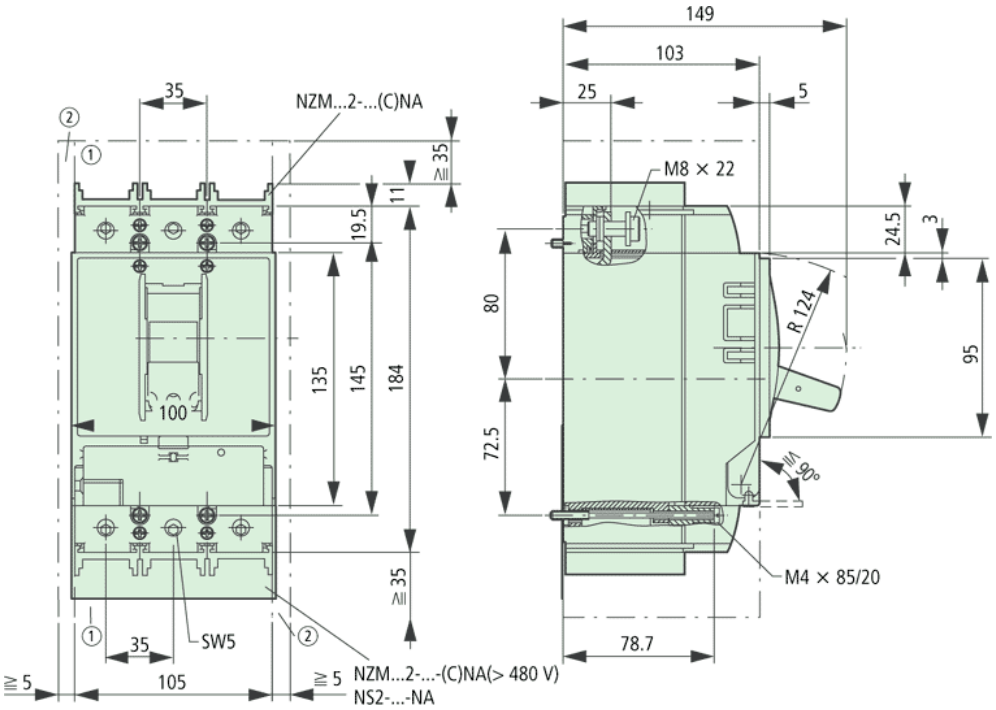

Blow out area, minimum distance to other parts 35 mm
Minimum distance to adjacent parts 5 mm

Dimensions

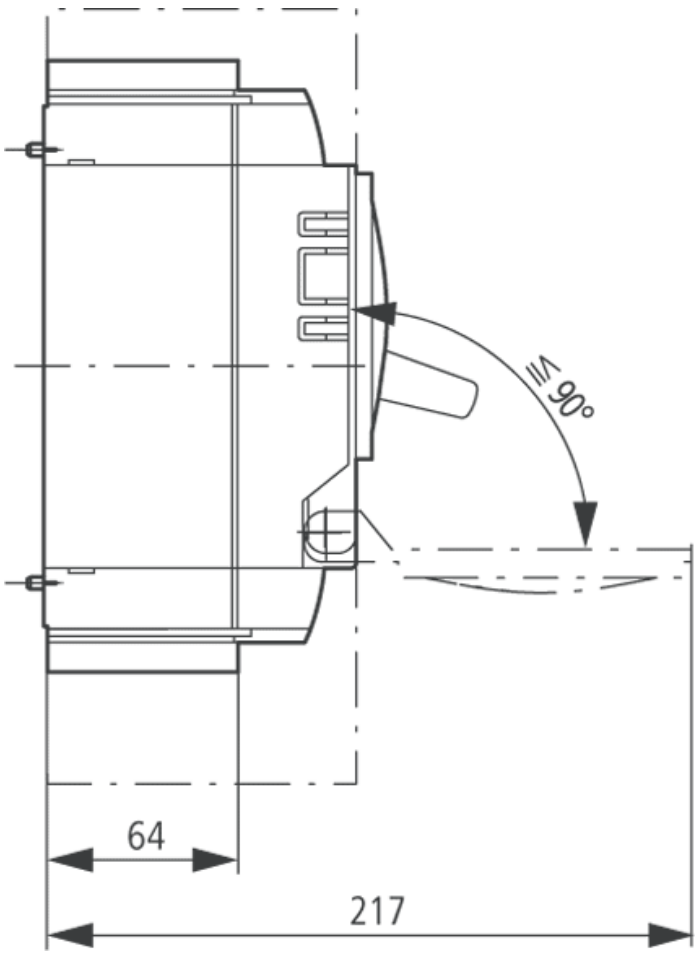

Characteristic curve

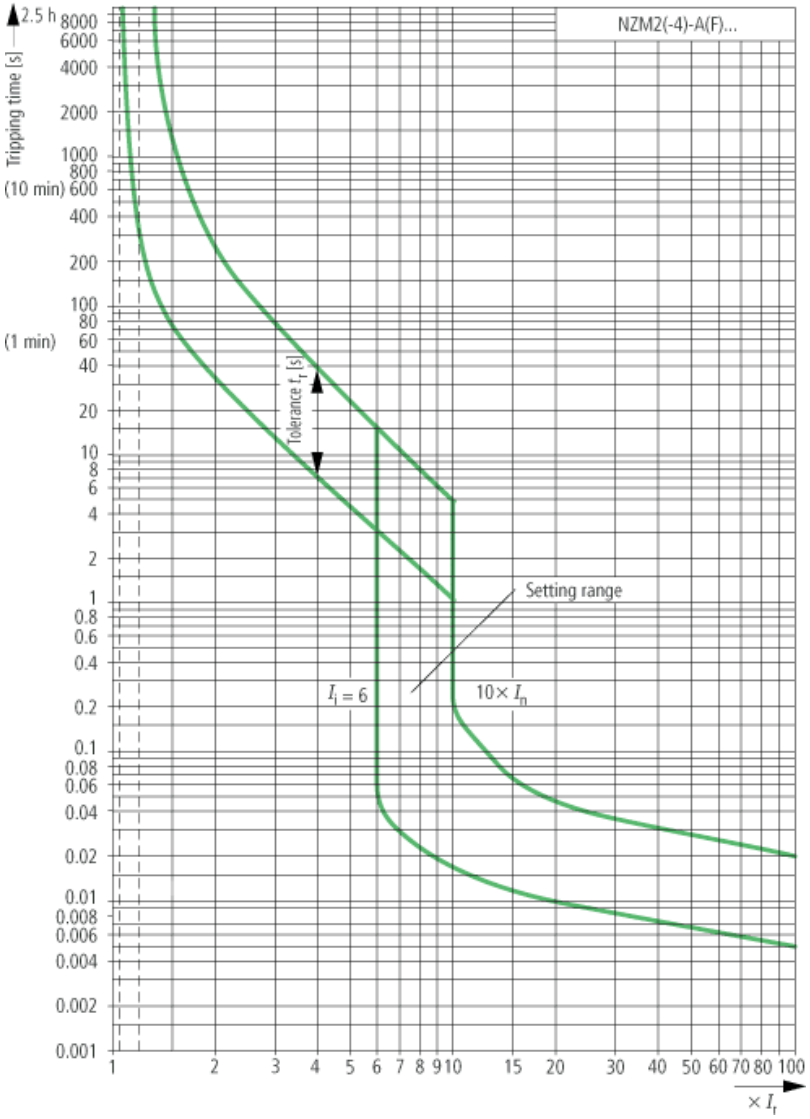

System and line protection with NZM2

Characteristic curve

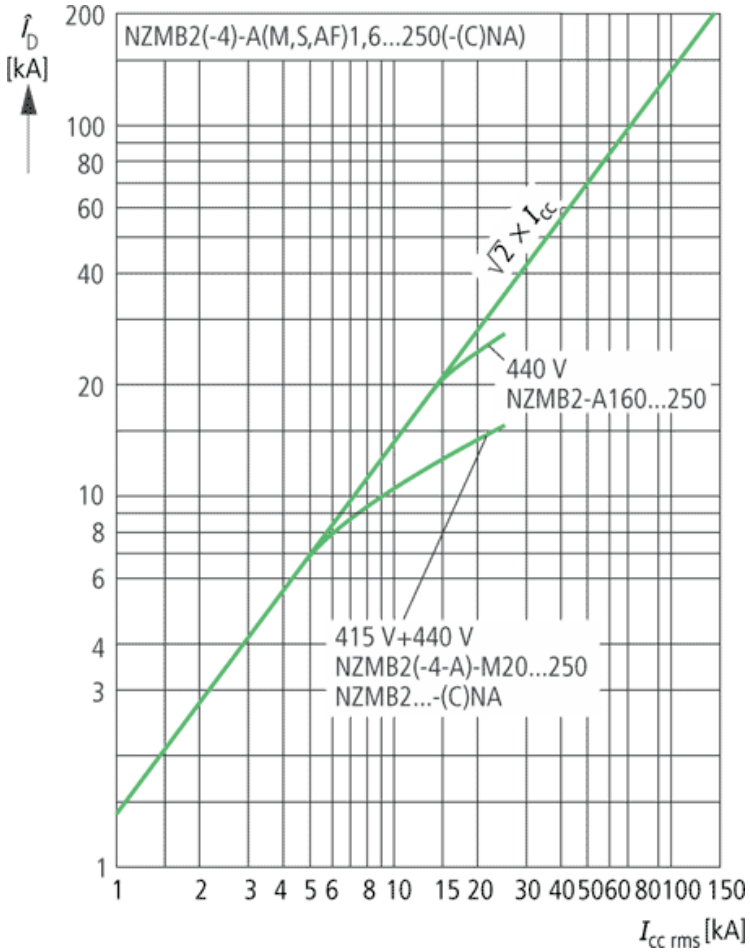

Let–through current $\hat{i}_D$
Let–through energy I^2t

Characteristic curve

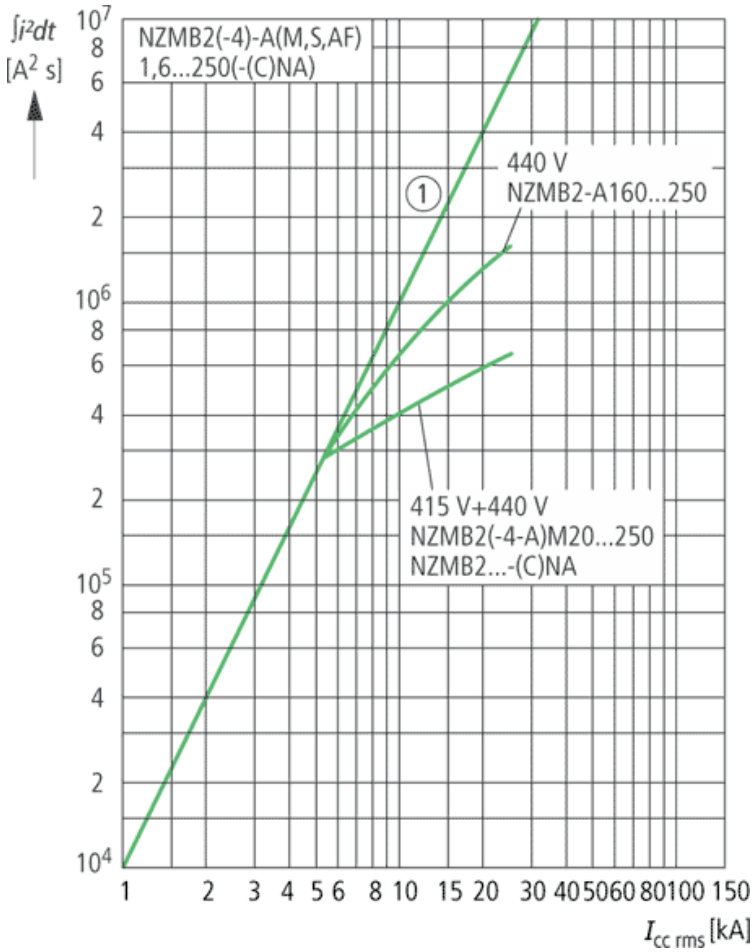

1 half–shaft

Moeller GmbH, Hein–Moeller–Str. 7–11, D–53115 Bonn
E–Mail: catalog@moeller.net, Internet: www.moeller.net, http://catalog.moeller.net
HPL–C2007G V2.1 © 2007 by Moeller GmbH