MOELLER

Type: **NZMN2−M200**
Article No.: **265725**
Sales text **Circuit−breaker 3p 200A motor protection**




| Ordering information | | | |
|---|---|---|---|
| Motor ratings | | | |
| Rated short−circuit current 500 V/525 V | $I_q$ | kA | 50 |
| Setting range | | | |
| Overload releases | | | 160...200 |
| Short−circuit release | | | 1600...2500 |
| Contactor type “1” coordination | | | DILM185/22(...)<br>DILM225/22(...) |
| Contactor type "2" coordination | | | DILM185/22(...)<br>DILM225/22(...) |

**Notes concerning the product group**

The motor−starter combination consists of the motor protective circuit−breaker or circuit−breaker and contactor.

They conform with IEC/EN 60947−4−1 or VDE 0660 Part 102.

$I_q$ = Rated conditional short−circuit current.

| General | | | |
|---|---|---|---|
| Standards | | | IEC/EN 61131−2<br>IEC/EN 60947−4 |
| **Main conducting paths** | | | |

| | | | |
|---|---|---|---|
| Rated impulse withstand voltage | $U_{imp}$ | V AC | 6000 |
| Overvoltage category/pollution degree | | | III/3 |
| Rated operational voltage | $U_e$ | V | 230 – 415 |
| **Additional technical data** | | | |
| Further information | | | PKZM0 motor–protective circuit–breakers, see motor–protective circuit–breakers/PKZM0 product group<br>DILM contactors, see contactors product group<br>DILET timing relay, ETR, see contactors, electronic timing relays product group |

## Dimensions

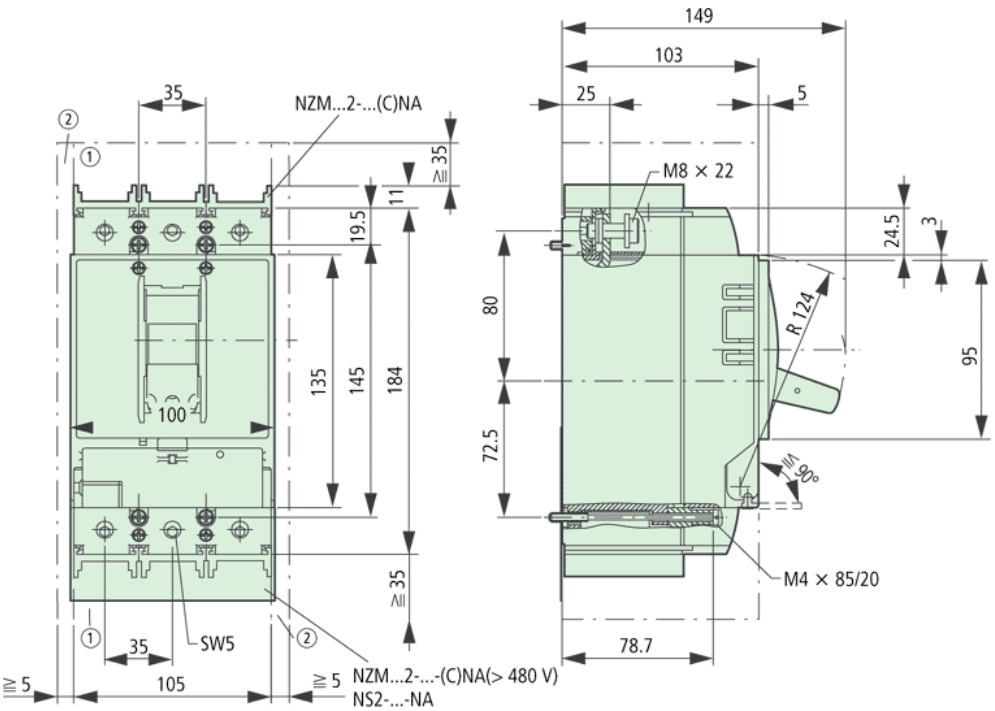


Blow out area, minimum distance to other parts 35 mm
Minimum distance to adjacent parts 5 mm

## Dimensions

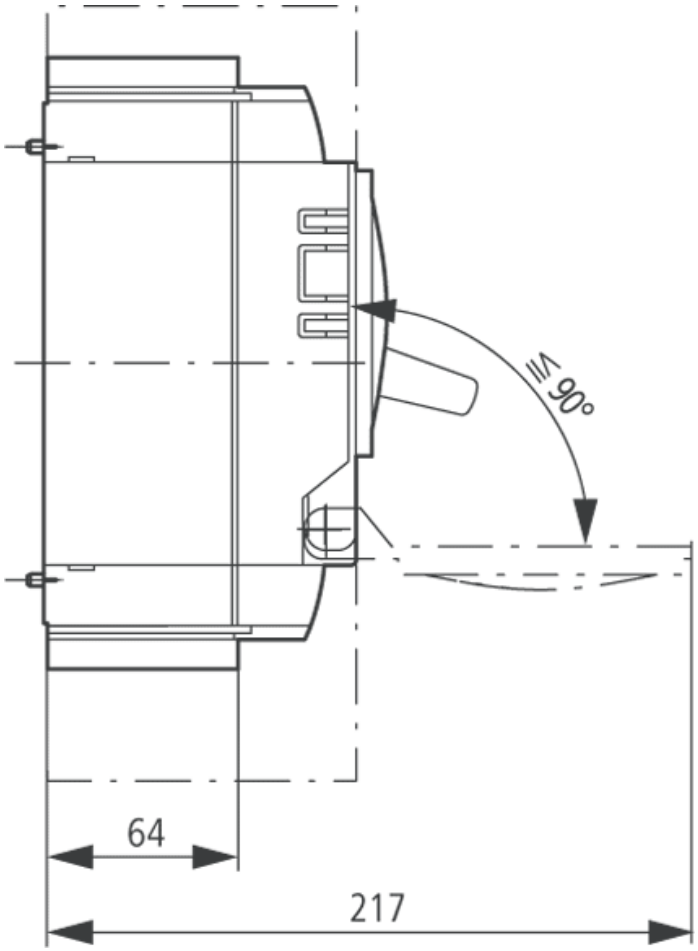


Moeller GmbH, Hein–Moeller–Str. 7–11, D–53115 Bonn
E–Mail: catalog@moeller.net, Internet: www.moeller.net, http://catalog.moeller.net
HPL–C2007G V2.1 © 2007 by Moeller GmbH