Polyester Insulating Enclosures

Thalassa PLS, PLM & PLA

Boxes, wall-mounting and floor-standing enclosures

Catalogue
2012



For outdoor and harsh environment electrical distribution, automation, signalization and IT applications

Schneider Electric

Insulating enclosures


PB500213


PB500076


PB501353


PB500215


PB500216


PB500078

Thalassa PLS Insulating modular boxes 9

Selection guide 10

Dimensions 12

Thalassa PLM Wall-mounting in polyester 20

Dimensions 25

Selection guide 26

Thalassa PLA Floor-standing in polyester 42

PLA version: Completely sealed enclosure 44

PLAT version: Ventilated canopy 45

PLAZ version: Plinth-type open bottom 46

PLAZT version: Plinth-type open bottom and ventilated canopy 47

Dimensions 48

Accessories 50

Polyester enclosures
Installation examples


PB501273

Outdoor installation, with exposure to atmospheric conditions: mist, solar radiation, extreme temperatures, etc.

Schneider Electric enclosures made from insulating materials are designed to protect your equipment in harsh environments or in contact with the public:
- Infrastructures: protection against bad weather (solar radiation, rain, etc.), impacts, saline atmospheres, etc.
  - Transport: resistance to UV, salt mist, tightness and impact resistance, etc.
  - Water: resistance to corrosion, resistance to impact and UV, resistance to chemical substances, etc.
  - Outdoor telecom and networks: resistance to UV, resistance to corrosion, protection of 19-inch accessories, etc.
  - Power: resistance to impact, to salt mist, etc.
  - Public lighting: anti-vandalism, anti-posting, UV resistance, etc.
- Industries in aggressive environments: resistance to corrosion, to chemical substances and protection against electrical hazards.

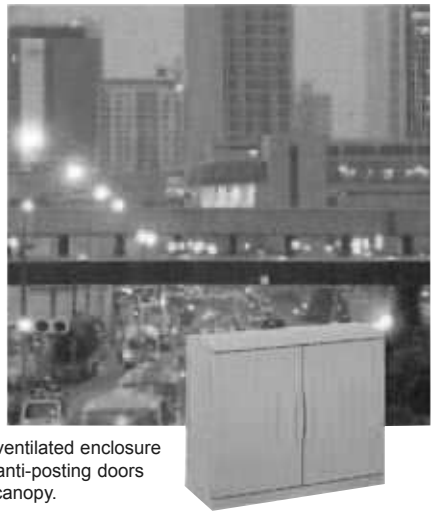
PB501274

Self-ventilated enclosure with anti-posting doors and canopy.


PB501275

Indoor or outdoor installation on industrial zones in aggressive environments.

Polyester enclosures
Our solutions


PB500213

Thalassa PLS boxes

- A range of insulating modular boxes for creating assemblies that separate functions and provide easy visibility thanks to their transparent covers.
- 14 box sizes from 270 × 180 × 180 mm to 720 × 540 × 230 mm.
- Accessories for power, automatism and modular applications.


PB501276

Thalassa PLM wall-mounting enclosures

- ABS/PC or polyester monobloc enclosure, IP 66, plain and transparent doors with built-in top and bottom canopies allowing the enclosures to be inverted.
- 8 sizes from 310 × 215 × 160 mm to 1056 × 852 × 350 mm.
- Large range of accessories (common with the Spacial 3D universal enclosure) for power, automatism and modular applications.

Polyester enclosures

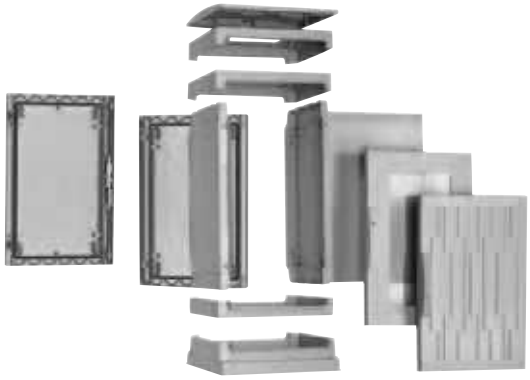
PB501277

Thalassa PLA floor-standing enclosure

● Modular design, made from polyester, combining:
– 40 sizes.
– 4 versions available, from completely sealed (IP 65) to self-ventilated with canopy and/or open bottom (IP 44 or 54).
– Plain, glazed or anti-posting door.
● The large range of accessories allows it to adapt to all your needs:
– Power distribution.
– Automatism.
– Modular.
– 19".

Polyester enclosures
Customised solutions

Configured Specific

The customised offer anticipates the adaptation needs of the standard offer

Advantages of our customised offer


PB501280

Preparation for installation with machining
Save time on marking out and transport to the machining location, avoid drilling errors with pre-machining of the body, panels and doors.


PB501281

Save time with pre-installed accessories
On the polyester floor-standing and wall-mounting enclosures, we can supply or rapidly install a selection of accessories.


PB501282

Save time with machined accessories
In order to adapt better to your needs, we can machine the accessories for polyester wall-mounting and floor-standing enclosures, including mounting plate, internal doors, cable-gland plates, etc.


PB501283

Improve its appearance with colour
For better integration of your enclosures in their environment or to help identify them, we offer you two solutions:
- Enclosures with colour in the mass, maintenance free (minimum amount required).
- Repainting of standard enclosures.
- Application of anti-graffiti paint.


PB501284

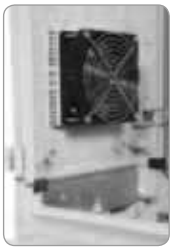
PB501285

Increase the service life of your equipment
Installation of the most frequent accessories of the thermal range in the factory.

Polyester enclosures
Installation examples

Configured Specific



Machined, coupled and equipped Thalassa PLS boxes



Thalassa PLM wall-mounting enclosure machined in the factory to accommodate cable glands



Thalassa PLA floor-standing enclosure with accessories installed in the factory



Coupled Thalassa PLA floor-standing enclosures with accessories installed ain the factory

Polyester enclosures
Definition help

Specific



PB500460

Checklist to help define a specific need

You can not find the solution you are looking for in our general catalogue or in the configured offer?
Then you need our specific offer. To optimise your special solution, we will study all the aspects of your project in the checklist below.

Project profile	
Quantity of enclosures	
Repetitive request (yes/no)	
Rates (number, frequency, amount per rate)?	

Environment	
Internal or external use?	
Type of environment: normal, saline, corrosive (what products?)	
Usage constraints (vibrations, etc.).	

Technical definition	
Product description (drawing, technical specifications)	
Dimensions, assemblies	
Required IP, IK	
Colour, anti-graffiti, anti-posting	
Loads to withstand: by the enclosure, by the doors and panels	
Cable entry (top, bottom, etc.), IP	
Glazed door, window, etc.	
Type of lock	
Definitions of machining operations (drawings, etc.)	
Electrical continuity by earthing braids or others (to be specified)	
Accessories	
Standard accessories installed	
Specific accessories to be supplied (plans, drawings, etc.), to be installed	
Other	
Possible reference norms	
Classification tests to be planned (for the internal classification plan) mechanical strength, electrical continuity, etc.	

Packaging	
Is standard packaging sufficient? If not, what type of packaging is required?	
Packaging labels (amount, position, type of information)?	
Palletisation constraints?	

Polyester enclosures
Customised solutions

Specific

Choice							
For the accessory options, specify whether you want supply or installation							
General options of the basic enclosure							
Quantity		Dimensions H (mm)		W (mm)		D (mm)	
Versions							
Choice of fixing or base accessories							
Fixing lugs, type							
Plinths, type and size							
Post-fixing device, post type							
Seats, special structures, etc.							
Body and cable-accessory options							
Cable entry: cable-gland plate, type							
Other solutions (brushes, quick entries, cable-glands, etc.)							
Cable supporting accessories							
Other accessories (power, lighting, etc.)							
Definition of the surfaces and the cut-outs (diagrams, drawings, DXF SE diagrams)							
Door and door-accessory options							
Front door, rear door, windows, glazed door							
Choice of handle/insert							
Door stop, door contact							
Document lip, shelves							
Cable supporting accessories							
Definition of the cut-outs for windows and switchgear (diagrams, drawings, DXF SE diagrams)							
Mounting accessory options							
Metallic mounting plate; plain, microperforated, Telequick, silkscreened							
Insulating mounting plate (polyester, bakelite)							
Symmetrical, asymmetrical, mixed uprights							
With plain or Telequick partial plates							
19” chassis							
Depth adjustment							
Complementary fixings							
Internal door							
Cut-outs of the plates, internal doors (diagrams, drawings, DXF SE diagrams)							

Thermal	
Do you need to cool? Heat? Ventilate?	
Have you calculated a heat balance to dimension your solution?	
External temperature range	
Internal temperature range (operation of the device)	
Dissipated power	
Choice of ventilation options	
Ventilation louvres, ventilation grilles	
Fan	
Thermostat/Hygrostat	
Positions, cut-outs (diagrams, drawings, etc.), installed accessories	

Logistics	
Delivery location, special storage	
Specific unloading or delivery mode	
Resumption of transport after equipping	

Additional remarks	

Insulating modular boxes

Modular

The dimensions of the sides, multiples of 9 cm, allow the creation of assemblies.

Protection

- IP 65.
- Gasket between body and cover.

Choice

- 14 sizes.
- 9 combinations of length × width.
- 2 cover heights.
- Transparent cover.
- Opaque cover made from polycarbonate or polyester.

Industry or infrastructure

- Energy, automatism.
- Accessories for modular distribution.



Safety

- Full insulation for class II equipment.
- Locking with 4, 6 or 8 points.

Easy

Bosses with inserts, at the rear of the body, for fixing plates or various supports.

Customisation

- Various machining operations of the rear and the cover.
- Option of colour in the mass.

IP 65 insulating modular boxes
Introduction


PB500213

- The product references show the two lateral dimensions in cm.
- 14 sizes of insulating boxes; the sides are multiples of 9 cm.
- Insulating boxes that can be coupled by all their side surfaces, allowing the creation of the greatest variety of modular assemblies.
- Rear made from polyester reinforced with fibreglass, moulded by hot compression, 9 sizes.
- 3 types of cover available according to the sizes:
  – Standard cover, made from transparent polycarbonate with neoprene gasket, 45 mm high, or 95 mm high (final index A) according to the sizes.
  – Opaque polycarbonate cover (index C), with neoprene gasket, 45 mm high, or 95 mm high (final index A) according to the sizes.
  – Polyester cover (index P) with PUR gasket, 45 mm high.
- The rears (prefix F) and the covers (prefix T) are supplied separately as standard references. The separate covers are supplied without locking screws or sealing accessories.
- The PLS enclosures with transparent cover are also offered in batches; the reference refers to the complete batch.

Technical characteristics

- Degree of protection: IP 65.
- Resistance to external mechanical impacts: IK 09.
- RAL 7032 grey colour (opaque rears and cover).
- Excellent resistance to corrosion; can withstand most chemical agents.
- Full insulation to create class II assemblies.
- Standard lock with slot screws outside the volume of the boxes. Delivered with sealing system.
- External wall mounting by 4 lugs, to be ordered separately.
- Service temperature: – 30 to + 120 °C.
- Bosses with M6 inserts for fixing the mounting plate.
- Halogen-free and compliant with the RoHS directive.
- Certification according to standard IEC 62208, guaranteeing IP, IK, resistance to heat and fire (self-extinguishing), insulation to 5000 V, resistance to bad weather and load of the mounting plate, 100 kg/m^2.
- UL certification and NEMA classification 4X and 13.

Selection guide


PB500092
PB500093
PB500094
PB500095
PB500095

Dimensions (mm)			Complete box			Complete boxes in batches	
Height	Width	Depth	Transparent cover	Opaque cover	Polyester cover	Transparent cover	Amount per batch
180	270	180	**NSYPLS1827**	**NSYPLSC1827**	**NSYPLSP1827**	**NSYPLS1827L**	56
270	270	180	**NSYPLS2727**	**NSYPLSC2727**	**NSYPLSP2727**	**NSYPLS2727L**	56
270	270	230	**NSYPLS2727A**	**NSYPLSC2727A**		**NSYPLS2727AL**	56
270	360	180	**NSYPLS2736**	**NSYPLSC2736**	**NSYPLSP2736**	**NSYPLS2736L**	56
270	360	230	**NSYPLS2736A**	**NSYPLSC2736A**	-	**NSYPLS2736AL**	56
270	540	180	**NSYPLS2754**	**NSYPLSC2754**	**NSYPLSP2754**	**NSYPLS2754L**	28
270	540	230	**NSYPLS2754A**	**NSYPLSC2754A**	-	**NSYPLS2754AL**	28
360	360	180	**NSYPLS3636**	**NSYPLSC3636**	**NSYPLSP3636**	**NSYPLS3636L**	28
360	540	180	**NSYPLS3654**	**NSYPLSC3654**	**NSYPLSP3654**	**NSYPLS3654L**	28
360	540	230	**NSYPLS3654A**	**NSYPLSC3654A**	-	**NSYPLS3654AL**	28
360	720	230	**NSYPLS3672A**	**NSYPLSC3672A**	-	**NSYPLS3672AL**	27
540	540	180	**NSYPLS5454**	**NSYPLSC5454**	**NSYPLSP5454**	**NSYPLS5454L**	14
540	540	230	**NSYPLS5454A**	**NSYPLSC5454A**	-	**NSYPLS5454AL**	14
540	720	230	**NSYPLS5472A**	**NSYPLSC5472A**	-	**NSYPLS5472AL**	14

IP 65 insulating modular boxes
Introduction

Selection guide for rears and covers (without screws)


PB501291


PB501292


PB501293


PB501293


PB501294


PB501295

Dimensions (mm)		Rear 135 mm	Low covers			High covers	
Height	Width		Transparent 45 mm	Opaque 45 mm	Polyester 45 mm	Transparent 95 mm	Opaque 95 mm
180	270	**NSYFPLS1827**	**NSYTPLS1827**	**NSYTPLSC1827**	**NSYTPLSP1827**	-	-
270	270	**NSYFPLS2727**	**NSYTPLS2727**	**NSYTPLSC2727**	**NSYTPLSP2727**	-	-
270	270	**NSYFPLS2727**	-	-	-	**NSYTPLS2727A**	**NSYTPLSC2727A**
270	360	**NSYFPLS2736**	**NSYTPLS2736**	**NSYTPLSC2736**	**NSYTPLSP2736**	-	-
270	360	**NSYFPLS2736**	-	-	-	**NSYTPLS2736A**	**NSYTPLSC2736A**
270	540	**NSYFPLS2754**	**NSYTPLS2754**	**NSYTPLSC2754**	**NSYTPLSP2754**	-	-
270	540	**NSYFPLS2754**	-	-	-	**NSYTPLS2754A**	**NSYTPLSC2754A**
360	360	**NSYFPLS3636**	**NSYTPLS3636**	**NSYTPLSC3636**	**NSYTPLSP3636**	-	-
360	540	**NSYFPLS3654**	**NSYTPLS3654**	**NSYTPLSC3654**	**NSYTPLSP3654**	-	-
360	540	**NSYFPLS3654**	-	-	-	**NSYTPLS3654A**	**NSYTPLSC3654A**
360	720	**NSYFPLS3672**	-	-	-	**NSYTPLS3672A**	**NSYTPLSC3672A**
540	540	**NSYFPLS5454**	**NSYTPLS5454**	**NSYTPLSC5454**	**NSYTPLSP5454**	-	-
540	540	**NSYFPLS5454**	-	-	-	**NSYTPLS5454A**	**NSYTPLSC5454A**
540	720	**NSYFPLS5472**	-	-	-	**NSYTPLS5472A**	**NSYTPLSC5472A**

Selection guides for mounting plates


PB500072


PB500102


PB500151


PB500103

For installing in the boxes (mm)		Metallic mounting plates		Insulating mounting plates	
Height	Width	Plain	Telequick	Polyester	Bakelite
180	270	**NSYPMM1827**	**NSYPMR1827**	**NSYPMA1827**	**NSYPMB1827**
270	270	**NSYPMM2727**	**NSYPMR2727**	**NSYPMA2727**	**NSYPMB2727**
270	360	**NSYPMM2736**	**NSYPMR2736**	**NSYPMA2736**	**NSYPMB2736**
270	540	**NSYPMM2754**	**NSYPMR2754**	**NSYPMA2754**	**NSYPMB2754**
360	360	**NSYPMM3636**	-	**NSYPMA3636**	**NSYPMB3636**
360	540	**NSYPMM3654**	**NSYPMR3654**	**NSYPMA3654**	**NSYPMB3654**
360	720	**NSYPMM3672**	**NSYPMR3672**	**NSYPMA3672**	**NSYPMB3672**
540	540	**NSYPMM5454**	**NSYPMR5454**	**NSYPMA5454**	**NSYPMB5454**
540	720	**NSYPMM5472**	**NSYPMR5472**	**NSYPMA5472**	**NSYPMB5472**

Selection guides for modular distribution chassis


PB501296

For installing in the boxes (mm)		Modular distribution chassis	No. of rows	No. of 18 mm modules
Height	Width	Page 17		
180	270	**NSYDLS12**	1	12
270	270	**NSYDLS24**	2	24
360	270	**NSYDLS242**	2	24
		NSYDLS36	3	36
540	270	**NSYDLS48**	4	48

Modular distribution application offer: box and chassis, see pages **17** and **18**.

IP 65 insulating modular boxes
Dimensions

Dimensions (mm)

The surfaces are numbered to enable identification of the surfaces to be drilled in the customised offer.

NSYPLS●●●1827

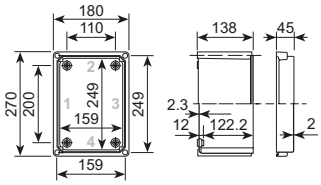

NSYPLS●●●2727●

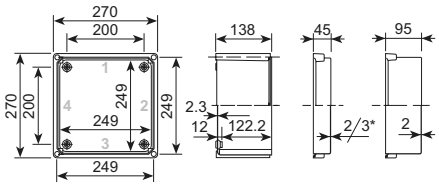

NSYPLS●●●2736●

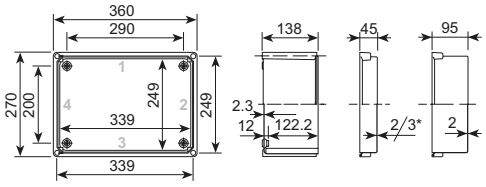

NSYPLS●●●3636

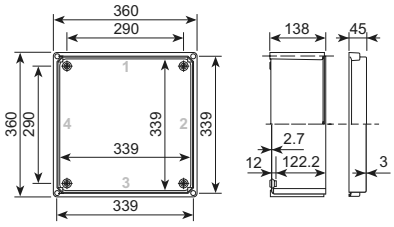

NSYPLS●●●2754●

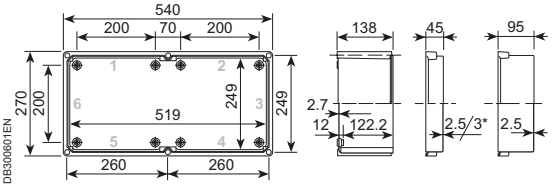

DB300601EN

NSYPLS●●●3654●

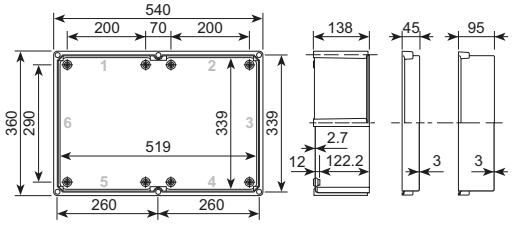

NSYPLS●●●5454●

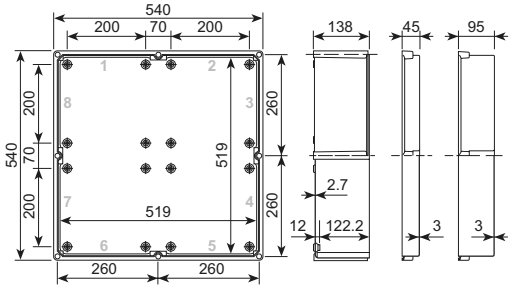

NSYPLS●●●3672●

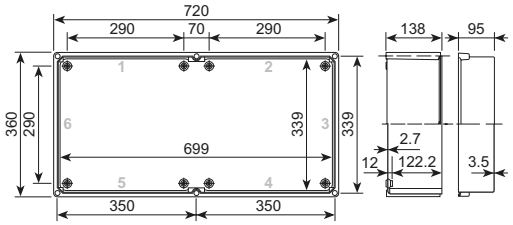

NSYPLS●●●5472●

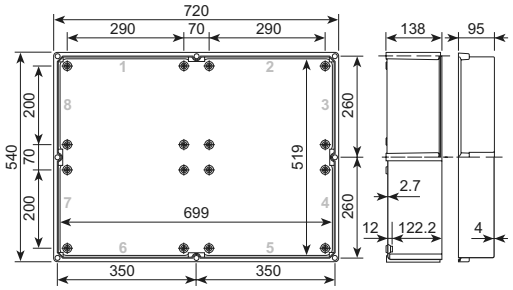

* Thickness of 3 mm for the polyester cover.

A

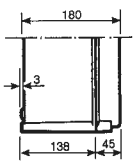

C

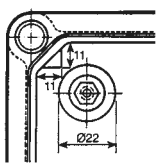

E

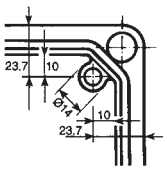

A Bottom and bottom cover.
B Bottom and top cover.
C D Internal view of the corners, details of the bosses with M6 inserts.
E F Internal view of the corners of the poyester covers with bosses for inserts ref. **NSYTEX5** for M5 screws.

B

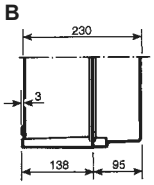

DB300602EN

D

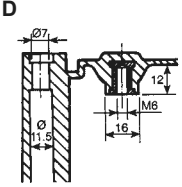

F

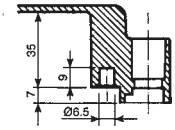

IP 65 insulating modular boxes
Accessories

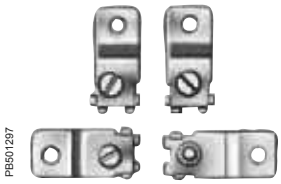
PB501297

Wall-fixing lugs

- Set of 4 lugs and fixings.
- Material: passivated zinc-coated or stainless steel.

Name	References
Steel mounting lugs	**NSYPF27N**
Stainless-steel mounting lugs	**NSYPF27X**

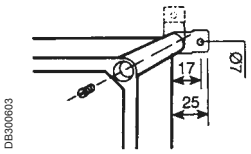

DB300603


PB501298

Post-fixing device

- Contains all the elements required for mounting on a post.

For installation on a surface with dimensions (mm)	References
270	**NSYFSP27270**
360	**NSYFSP27360**
540	**NSYFSP27540**

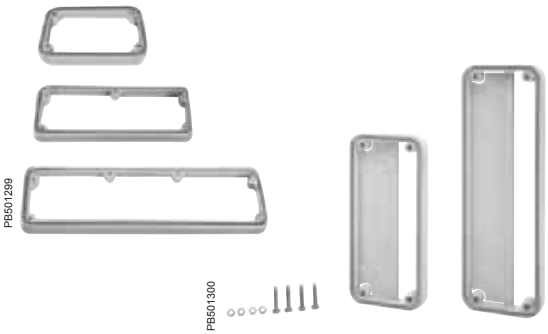

Coupling frames

- Coupling frame for an opening of 110 mm (for 180 mm surfaces).
- Coupling frame for an opening of 200 mm (for 270 mm surfaces).
- Coupling frame for an opening of 290 mm (for 360 mm surfaces).
- A sealing gasket is built into the frame with full opening to maintain the protection rating of IP 65.
- Frame with partial opening: without gasket and IP 44.

Opening (mm)	References	
	Full-opening frame	Partial-opening frame
110	**NSYUM27180**	-
200	**NSYUM27270**	**NSYUCC270** (1)
290	**NSYUM27360**	**NSYUCC360** (1)

(1) References by unit. Order by multiples of 10 units (10, 20, 30, etc.).


PB501301

Side plates

- 200 mm cable-gland plate or locking plate for the 270 mm surfaces.
- 290 mm cable-gland plate or locking plate for the 360 mm surfaces.
- IP 65 maintained by a sealing gasket.

Side plates (mm)	References
200	**NSYTL27270**
290	**NSYTL27360**

IP 65 insulating modular boxes
Accessories

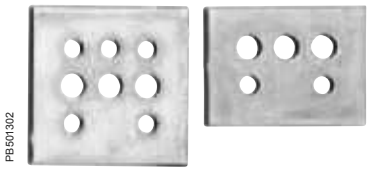
PB501302

Box coupling unit piece

- For coupling 2, 3 or 4 boxes, with optional wall mounting.
- To be ordered in multiples of 25.

For coupling	References
2 boxes	**NSYPS2C27**
3 or 4 boxes	**NSYPS4C27**

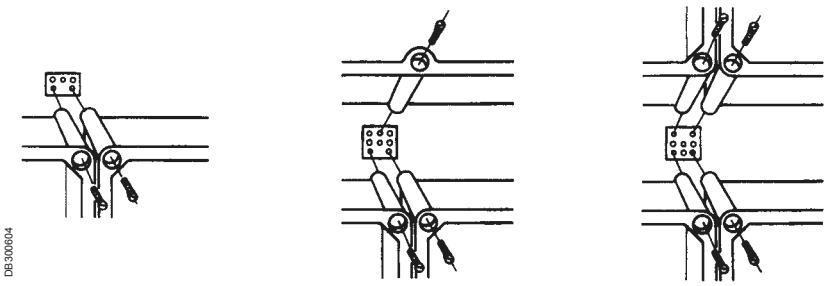
DB300604

M6 × 8 screw with cylindrical head.


PB501303


PB501304

Hinges

- Set of 2 external hinges made from plastic or internal hinges made from brass.
- To open the door to 180º.

Name	References
External plastic hinges	**NSYBE27**
Internal brass hinges	**NSYBL27**


PB501314

NSYAE25


PB501315

NSYAS25

Insulators for busbar

- Ref. **NSYAE25** for 4 bars of 15 or 20 mm. Utilisation on the 270 mm side.
- Ref. **NSYAS25*** for 1 bar of 15, 20 or 30 mm.

* References by unit. Order by multiples of 5 units (5, 10, 15, etc.).

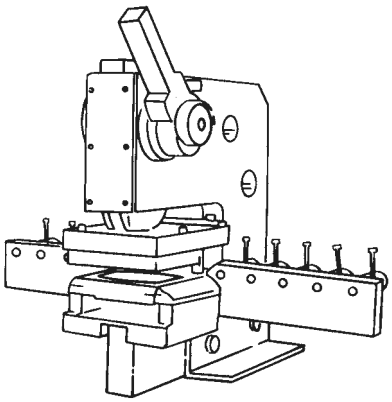
DB300605

Side cut-out press, ref. **NSYPUC27**.

Specific

Drill holes

- The machining operations on the dimensions of the lateral plates or frames can be specifically produced in our factory.
- The surfaces can be identified by the numbers provided on page **12**.

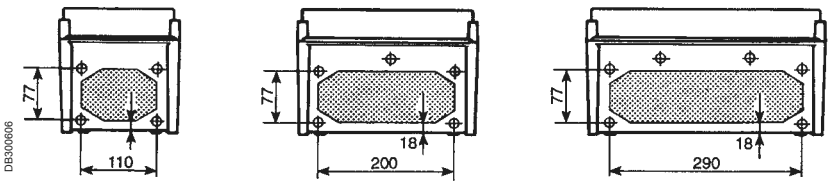

DB300606

IP 65 insulating modular boxes
Accessories


PB501305

With slotted head


PB501306

With wings


PB501307

With plumbable triangular head

Closing for PLS boxes

- Set of 4, 6 or 8 screws.
- Three types of screws are available:
  – With slotted head.
  – With wings.
  – With plumbable triangular head.
- The references also include 4 M6 screws for fixing mounting plates and 2 steel sealing accessories.

Name	Tool	References
Set of 4 slotted screws (1)	Flat-blade screwdriver	**NSYTCD274**
Set of 6 slotted screws (1)	Flat-blade screwdriver	**NSYTCD276**
Set of 8 slotted screws (1)	Flat-blade screwdriver	**NSYTCD278**
Set of 4 wing screws (2)	Manual	**NSYTCM274**
Set of 6 wing screws (2)	Manual	**NSYTCM276**
Set of 8 wing screws (2)	Manual	**NSYTCM278**
Set of 4 triangular screws	NSYLT27	**NSYTCT274**
Set of 6 triangular screws		**NSYTCT276**
Set of 8 triangular screws		**NSYTCT278**

(1) Included in the standard references of boxes **NSYPLS●●●**.
(2) Included in the standard references of modular distribution boxes **NSYPLS●●●DLS●●●**.


PB501308


PB501309

Closing locks

- Option of installing a side lock, on the opposite side to where the hinges are installed.

Name	Tool	References
Double-bar side lock and handle	NSYDBP	**NSYCL27M**
Side lock with key 405		**NSYCL27L405**
Side lock with key 1242E		**NSYCL27L1242E**


PB501310


PB501310

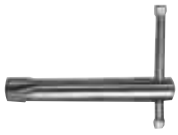
PB501311

Sealing and opening

Name	References
Plastic-coated sealing triangle*	**NSYPPS27**
Triangular key for PLS	**NSYLT27**

* References by unit. Order by multiples of 10 units (10, 20, 30, etc.).


PB501312

Plastic carrying handle

Name	Reference
Carrying handle	**NSYATM27**

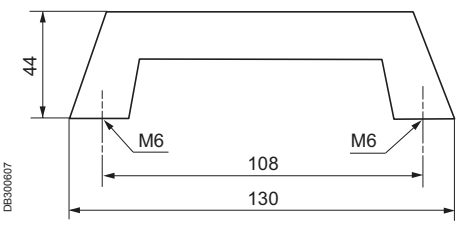

DB300607

Insulating modular boxes
Accessories

Examples of assembly

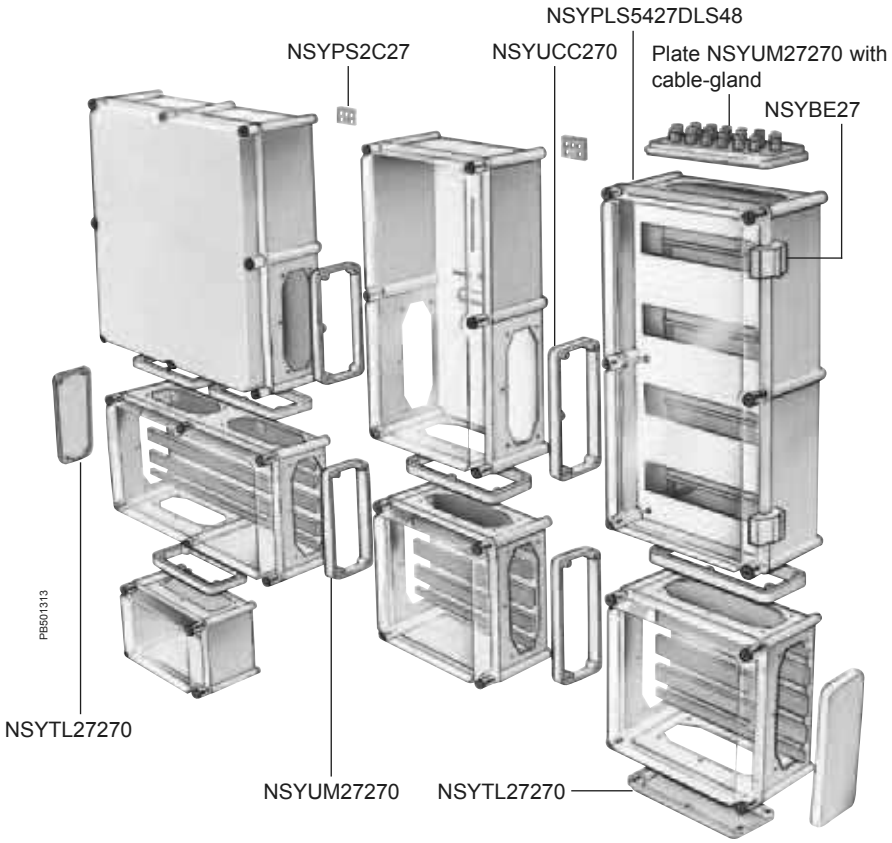

All the boxes can be joined by their lateral surfaces, using the coupling frames **NSYUM•••** or **NSYUCC•••**, and the joining and fixing pieces **NSYPS2C27** and **NSYPS4C27**.

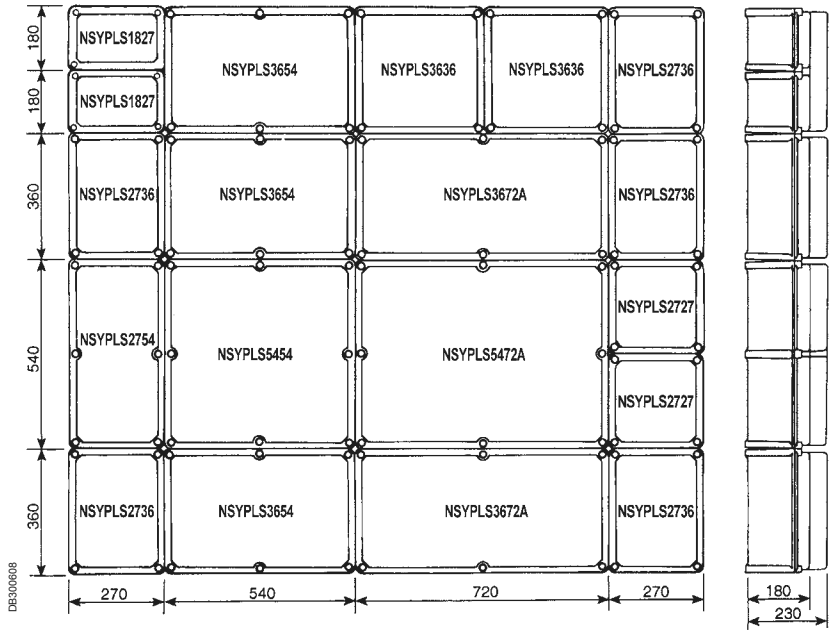

Insulating modular boxes
Modular distribution application


PB501316

NSYPLS5427DLS48

Insulating modular boxes with modular distribution chassis

PLS boxes, polyester rear and PC transparent cover with hinges and wing screws for manual opening.
Built-in DLS modular chassis, made up of an insulating protection panel, RAL 7011 colour, 35-mm DIN rails and a 2 × 16 + 5 × 6 mm² neutral/earth connection strip.

- Opening for cable entry, delivered with lock plate, ref. **NSYTL27270**.
- Double-insulating installation.
- Plastic external hinges, allowing opening to 180º.
- Removable 36-mm blanking covers (2 modules): 1 per row in the standard offer.
- The modular chassis can be ordered separately, see references page **11**.

Specific

- The boxes can be equipped with a double-bar lock and handle ref. **NSYCL27M**, or a lock with key ref. **NSYCL27L405**, by specific demand.

Insulating modular boxes
Modular distribution application

Selection guide

External dimensions (mm)			Number of 18 mm modules	Number of rows	Approximate weight (kg)	References
Height (A)	Width (B)	Depth (C)				
180	270	180	12	1	1.7	**NSYPLS1827DLS12**
270	270	180	24	2	2.5	**NSYPLS2727DLS24**
360	270	180	24	2	2.7	**NSYPLS3627DLS24**
360	270	180	36	3	2.8	**NSYPLS3627DLS36**
540	270	180	48	4	3.8	**NSYPLS5427DLS48**

Dimensions (mm)

NSYPLS1827DLS12

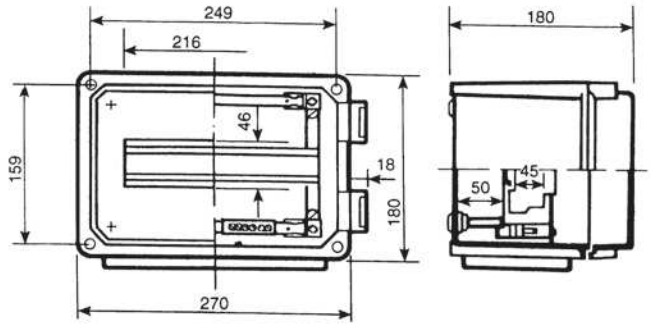

NSYPLS2727DLS24

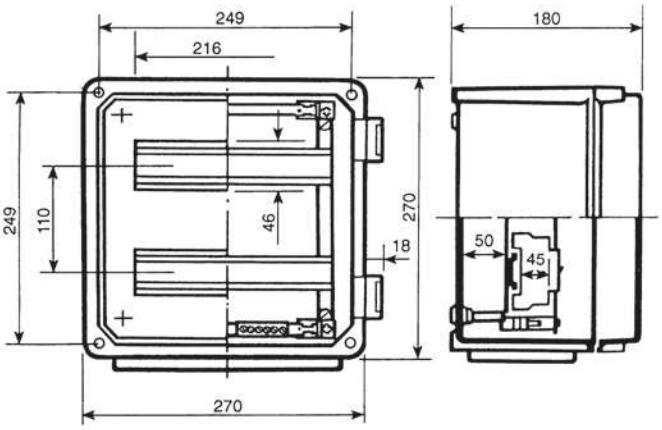

NSYPLS3627DLS24

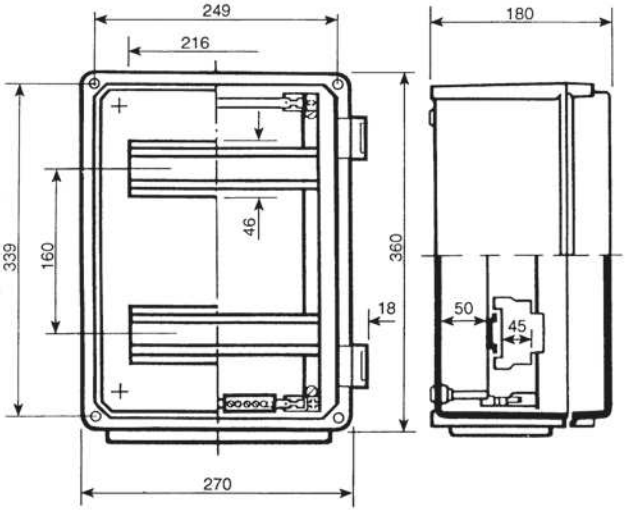

NSYPLS3627DLS36

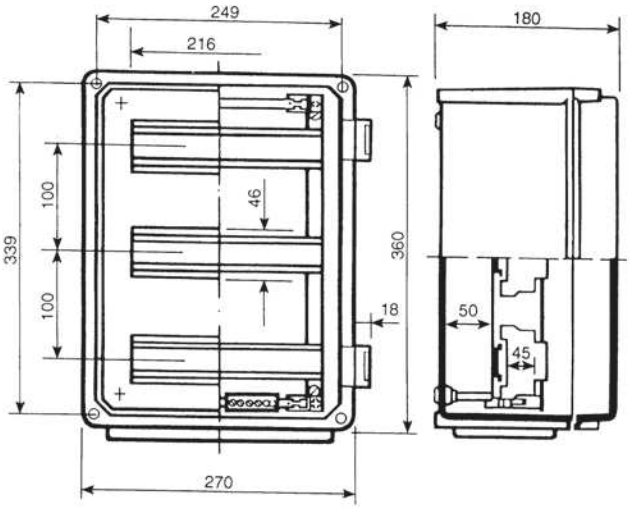

NSYPLS5427DLS48

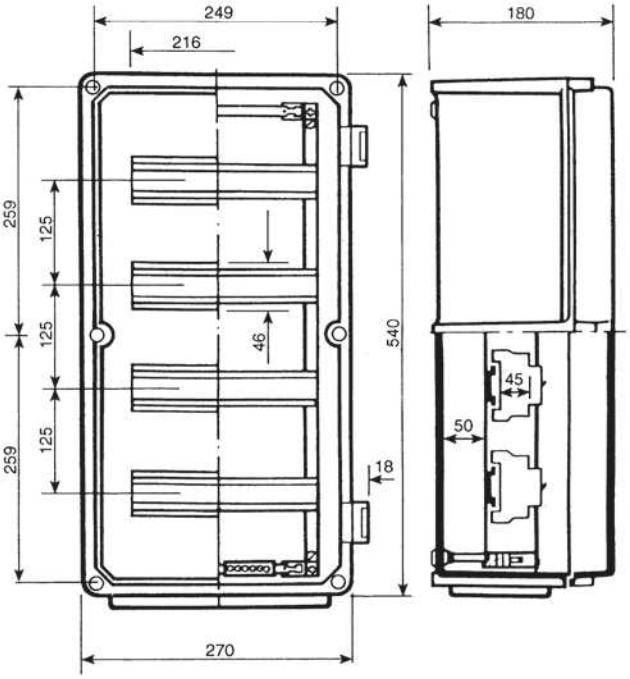

DB300609

Polyester wall-mounting enclosures

Service life

High resistance to corrosion in harsh environments, maintaining its mechanical properties and insulation.

Protection

- IP 66.
- Polyurethane gasket.
- Built-in canopy.
- Lock outside sealed area.

Choice

- 1 ABS/PC dimension and 7 polyester dimensions.
- Smooth or glazed door.

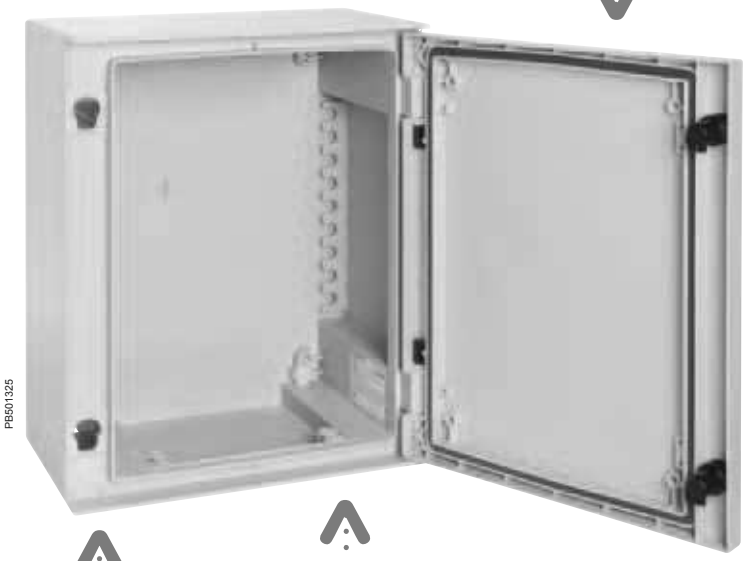

Easy

- Door easily reversible by turning it over.
- Opening to 120° or 180°.
- Easy machining with no corrosion.
- Lightness.

Smart

- Notches for easy fixing of DIN rails.
- Grid pattern on the rear of the door for marking the machining operations.

Customisation

- Configured: machining and accessories.
- Specific: non-standard colour and accessories.

Safety

- Full insulation (to produce class II units).
- Mechanical strength.
- No risk to the public.

Applications

- Industry or infrastructures in harsh environments.
- Indoor or outdoor installation.
- Accessories for modular distribution.

General characteristics of the Thalassa PLM wall-mounting enclosures:

- Indoor or outdoor use.
- 1 size for the ABS/PC wall-mounting enclosure (310 × 215 × 160 mm).
- 7 sizes of polyester wall-mounting enclosures.
- Monobloc body including the canopies (gasket protection), except for wall-mounting enclosure ref. **NSYPLM3025**.
- Doors with polyurethane gasket.
- 2 types of doors.
  – Smooth.
  – Transparent (for the ABS/PC enclosure) or glazed (for the polyester enclosures).
- Reversible door opening direction by turning the enclosure over.
- Degree of protection IP 66 according to standard IEC 60529.
- Impact resistance IK 10 for the plain doors and surfaces and IK 08 for the glazed doors of the polyester versions, according to standard IEC 62262.
- Many accessories in common with the range of steel wall-mounting enclosures, Spacial S3D or Spacial CRN.

Properties of the material of the polyester versions

The wall-mounting enclosures are made from polyester reinforced with fibreglass, moulded by hot compression, RAL 7032 colour.
This material:

- Is insulating: >15 kV per mm.
- Withstands cold and heat in the range of –50 ºC...+150 ºC.
- Does not soften under intense heat (ball resistance at +150 ºC).
- Is self-extinguishing (does not propagate fire): HB40 classification and self-extinguishing in several seconds during the glow-wire test at 960 ºC –30 sec.
- Does not contain halogens.
- Releases little smoke and no toxic smoke in the event of combustion.
- Is light.
- Can be machined easily.
- Is corrosion-resistant: no rusting, and can withstand many chemical agents.
- Can resist bad weather.

Characteristics of the production process of the polyester version

The components of the enclosure (body and doors) are moulded by hot compression: the parts have an excellent finish on both sides and can include bosses for accommodating inserts and accessories for mounting or cable management.

Certificate of conformity with enclosure standard IEC 62208 for:

IP, IK, resistance to heat and fire, insulation 5000 V, resistance to bad weather and corrosion and resistance to internal loads (150 kg/m^2) and loads on the door (30 kg/m^2).

UL certification and NEMA classification 4x and 13 for the polyester wall-mounting enclosures

Total insulation to produce class II units according to IEC 61439-1

Complies with RoHS and REACH Directives

ABS/PC wall-mounting enclosures 310 × 215 mm IP 66
Introduction


PB500144

Technical characteristics

- Monobloc wall-mounting enclosure made from ABS/PC, RAL 7032 colour.
- Version with transparent polycarbonate door.
- Closes with a 3-mm double-bar lock.
- Door opening: 180°.
- Degree of protection: –35 °C...+90 °C.
- Protection rating IP 66 according to IEC 60529.
- Resistance to external mechanical impacts of IK 10 (20 joules) according to IEC 62262.
- Direct fixing of symmetrical rails ref. **NSYCS200PLM** with plastic nuts ref. **NSYTCSPLM**, to be installed in the notches on the rear of the body, with a pitch of 25 mm.
- Fixing of installation plates on the studs at the rear of the enclosure.
- Back of the door with a 25-mm grid pattern.

External dimensions (mm)			References of wall-mounting enclosures with door	
Height	Width	Depth	Plain*	Transparent
310	215	160	**NSYPLM32**	**NSYPLM32T**

*These enclosures are also available equipped with metallic or insulating mounting plates. See summary guide of the references on page **26**.

Dimensions

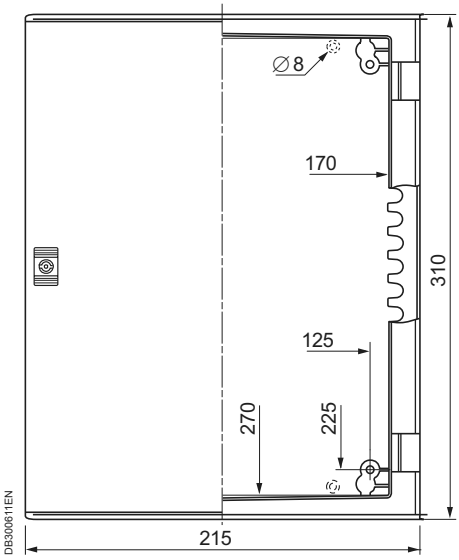

DB300611EN

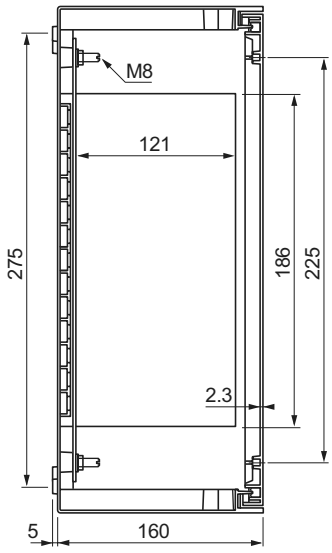

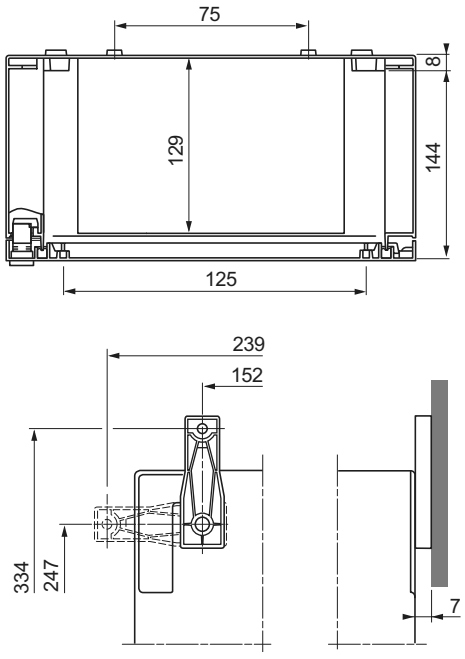

Polyester wall-mounting enclosures 308 × 255 mm IP 66
Introduction


PB500145

Technical characteristics

- Monobloc wall-mounting enclosure made from polyester reinforced with fibreglass, moulded by hot compression, RAL 7032 grey colour.
- Version with transparent tempered-glass door.
- Degree of protection IP 66 according to IEC 60529.
- Resistance to external mechanical impacts:

– Plain door enclosures IK 10 (20 joules).
– Glazed door enclosures IK 08 (5 joules) according to IEC 62262.

- Closes with two 3-mm double-bar locks.
- Door opening angle: 120°.
- Fixing of rear accessories on 4 M8 × 18 studs.
- Grid pattern with a pitch of 50 mm on the back of the door.

External dimensions (mm)			References of wall-mounting enclosures with door	
Height	Width	Depth	Plain*	Transparent
308	255	160	**NSYPLM3025**	**NSYPLM3025T**

*These enclosures are also available equipped with metallic or insulating mounting plates. See summary guide of the references on page **26**.

Dimensions

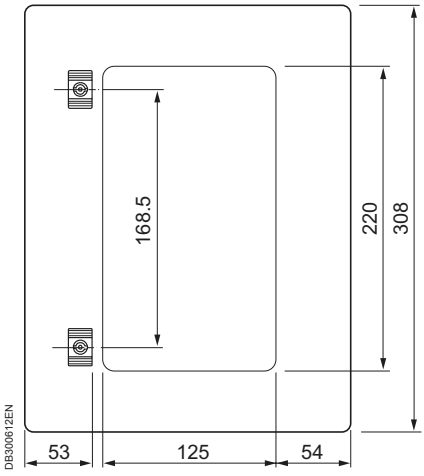

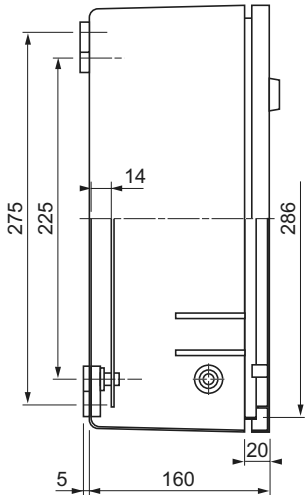

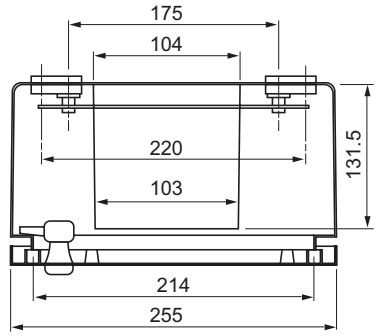

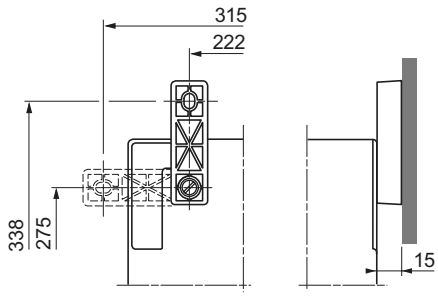

Polyester wall-mounting enclosures IP 66
Introduction


PB501325

Technical characteristics

- Monobloc wall-mounting enclosure made from polyester reinforced with fibreglass, moulded by hot compression, RAL 7032 grey colour.
- Version with transparent tempered-glass door.
- Degree of protection IP 66 according to IEC 60529.
- Resistance to external mechanical impacts:
  – Plain door enclosures IK 10 (20 joules).
  – Glazed door enclosures IK 08 (5 joules) according to IEC 62262.
- Locking device outside the sealed area, guaranteeing the tightness of IP 66 over time.
- Locking system:
  – Enclosure height ≤ 847 mm: 2 locks with double-bar insert or 1 handle with key lock and 3-point closure.
  – Enclosure height 1056 mm: 1 lock with double-bar insert and 4-point closure.
- Door opening angle: 180°.
- Bosses for accessory-fixing inserts: M6 inside the enclosure, M5 in the door for enclosure heights of 430 and 530 mm, M6 in the door for enclosure heights ≥ 647 mm.
- Fixing of rear accessories on 4 M8 studs, included in the standard supply.
- Direct fixing of symmetrical rails ref. **NSYCS●●●PLM**, with plastic nuts, ref. **NSYTCSPLM**, to be installed in the notches on the rear of the body, with a pitch of 25 mm.
- Grid pattern with a pitch of 25 mm on the back of the door.


PB501326

Built-in canopy protecting the door and the sealing gasket.
Two double-bar 3 mm locks outside the sealed zone.


PB501327

Polyamide hinge pin, easily removable and captive.


PB500146


PB501328


PB500147


PB501329

External dimensions (mm)			References of wall-mounting enclosures with door			
Height (A)	**Width** (B)	**Depth** (C)	**Plain** (3)	**Plain** (1)	**Transparent**	**Transparent** (1)
430	330	200	**NSYPLM43**	**NSYPLM43V**	**NSYPLM43T**	**NSYPLM43TV**
530	430	200	**NSYPLM54**	**NSYPLM54V**	**NSYPLM54T**	**NSYPLM54TV**
647	436	250	**NSYPLM64**	**NSYPLM64V**	**NSYPLM64T**	**NSYPLM64TV**
747	536	300	**NSYPLM75**	**NSYPLM75V**	**NSYPLM75T**	**NSYPLM75TV**
847	636	300	**NSYPLM86**	**NSYPLM86V**	**NSYPLM86T**	**NSYPLM86TV**
1056	852	350	**NSYPLM108** (2)	-	**NSYPLM108T** (2)	-

(1) Wall-mounting enclosure with handle and lock with 3-point closure and key 1242 E delivered as standard.
(2) Wall-mounting enclosure with standard 5 mm double-bar lock and lock with 4-point closure.
(3) These enclosures are also available equipped with metallic or insulating mounting plates. See summary guide of the references table on page **26**.

Polyester wall-mounting enclosures IP 66
Dimensions

A: Height
B: Width
C: Depth

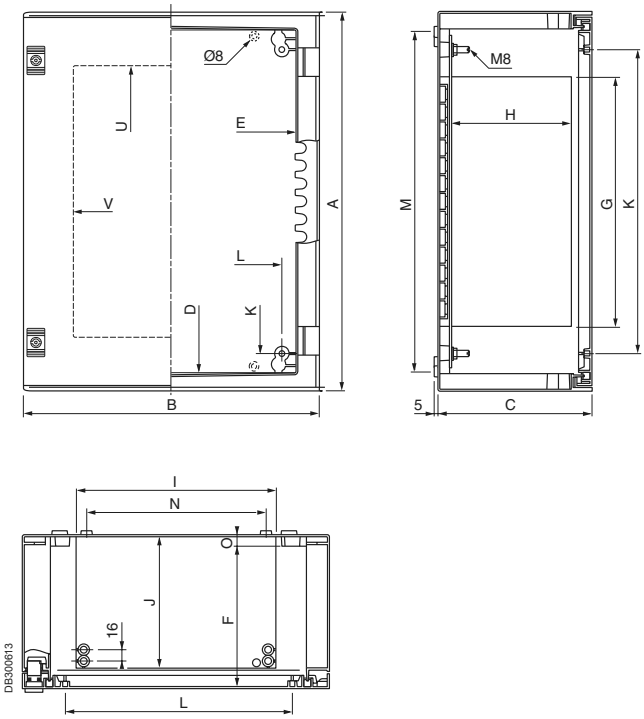

Dimensions (mm)										Bottom screw and door bosses (mm)		Internal fixing (m)			References
A	B	C	D	E	F	G	H	I	J	K	L	M	N	O	
430	330	200	380	260	181	247	150	179	168	325	225	375	150	13	**NSYPLM43**
530	430	200	480	360	181	347	150	279	168	425	325	475	250	13	**NSYPLM54**
647	436	250	580	360	228	388	192	279	212	525	325	575	250	13	**NSYPLM64**
747	536	300	680	460	278	487	241	379	261	625	425	675	350	15	**NSYPLM75**
847	636	300	780	560	278	587	241	479	261	725	525	775	450	15	**NSYPLM86**
1056	852	350	980	760	327	775	280	680	300	925	725	975	650	15	**NSYPLM108**

Glazed door opening (mm)		References	Glazed door opening (mm)		References
U	V		U	V	
273	194	**NSYPLM43T**	273	151	**NSYPLM43TV**
373	294	**NSYPLM54T**	373	251	**NSYPLM54TV**
463	294	**NSYPLM64T**	463	252	**NSYPLM64TV**
563	394	**NSYPLM75T**	563	352	**NSYPLM75TV**
663	494	**NSYPLM86T**	663	452	**NSYPLM86TV**
854	661	**NSYPLM108T**			

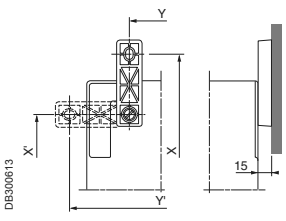

External fixing with lugs (mm)				References
Vertical		Horizontal		
X	Y	X'	Y'	
490	225	355	360	**NSYPLM43**
590	325	455	460	**NSYPLM54**
690	330	555	465	**NSYPLM64**
790	430	655	565	**NSYPLM75**
890	530	755	665	**NSYPLM86**
1090	750	955	885	**NSYPLM108**

Polyester wall-mounting enclosure
Selection guide

Summary guide of the references


PB500144


PB500146


PB500147


PB501264


PB501265

External dimensions (mm)			ABS/PC wall-mounting enclosures IP 66		Polyester wall-mounting enclosures IP 66				Wall-mounting enclosures with plain door and mounting plate (1)	
H	W	D	Plain door	Transp. door	Plain door	Transp. door	Plain door 3-point closure	Transp. door 3-point closure	Plain	Bakelite
			Page 22		Page 23 and 24		Page 24			
310	215	160	**NSYPLM32**	**NSYPLM32T**	-	-	-	-	**NSYPLM32P**	**NSYPLM32B**
308	255	160	-	-	**NSYPLM3025**	**NSYPLM3025T**	-	-	**NSYPLM3025P**	**NSYPLM3025B**
430	330	200	-	-	**NSYPLM43**	**NSYPLM43T**	**NSYPLM43V**	**NSYPLM43TV**	**NSYPLM43P**	**NSYPLM43B**
530	430	200	-	-	**NSYPLM54**	**NSYPLM54T**	**NSYPLM54V**	**NSYPLM54TV**	**NSYPLM54P**	**NSYPLM54B**
647	436	250	-	-	**NSYPLM64**	**NSYPLM64T**	**NSYPLM64V**	**NSYPLM64TV**	**NSYPLM64P**	**NSYPLM64B**
747	536	300	-	-	**NSYPLM75**	**NSYPLM75T**	**NSYPLM75V**	**NSYPLM75TV**	**NSYPLM75P**	**NSYPLM75B**
847	636	300	-	-	**NSYPLM86**	**NSYPLM86T**	**NSYPLM86V**	**NSYPLM86TV**	**NSYPLM86P**	**NSYPLM86B**
1056	852	350	-	-	**NSYPLM108**	**NSYPLM108T**	-	-	-	**NSYPLM108B**

(1) Not mounted.

Summary guide of the characteristics

References	NSYPLM32	NSYPLM3025	NSYPLM43/54/64/75/86	NSYPLM108
Dimensions (mm)	310 × 215 × 160	308 × 255 × 160	430 × 330 × 200 to 847 × 636 × 300	1056 × 852 × 350
Material	ABS/PC	Polyester	Polyester	Polyester
Degree of protection	IP 66	IP 66	IP 66	IP 66
Impact protection (1)	IK 10	IK 10	IK 10	IK 10
Built-in canopy	Yes	No	Yes	Yes
Lock (2)	1	2	2	1 (4-point closure)
Closing with handle (3)	-	-	1 (3-point closure)	-
Lock outside the sealed area	No	No	Yes	Yes
Door opening	180°	120°	180°	180°
Notches every 25 mm (4)	Yes	No	Yes	Yes
Grid pattern on the back of the door	25 mm	50 mm	25 mm	25 mm

(1) IK 08 glazed door of the polyester enclosures.
(2) With double-bar insert.
(3) Handle with insert for key 1242 E.
(4) Notches in the rear of the enclosure for quick installation of DIN rails.


Specific


Configured

Wall-mounting enclosures with polyester mounting plate, machined or not, see customised offer.

Polyester wall-mounting enclosure
Selection guide

Mounting accessories

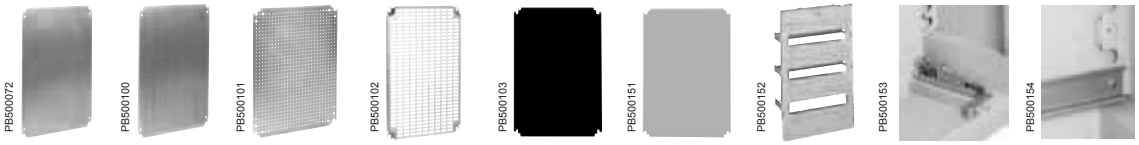

External dimensions of the enclosures (mm)			Metallic mounting plates				Insulating mounting plates		Modular distribution chassis	Step slides	Symmetrical DIN rail
H	W	D	Plain	Silkscreened	Microperforated	Telequick	Bakelite	Polyester	Page 37	Page 34	Page 34
310	215	160	NSYMM32	-	-	NSYMR32	NSYMB32	NSYMPP32	-	-	NSYCS200PLM
308	255	160	NSYMM3025	-	-	NSYMR3025	NSYMB3025	NSYMPP3025	NSYDLPLM18	-	-
430	330	200	NSYMM43	NSYMS43	NSYMF43	NSYMR43	NSYMB43	NSYMPP43	NSYDLA24	NSYDPLM200	NSYCS300PLM
530	430	200	NSYMM54	NSYMS54	NSYMF54	NSYMR54	NSYMB54	NSYMPP54	NSYDLA48	NSYDPLM200	NSYCS400PLM
647	436	250	NSYMM64	NSYMS46	NSYMF64	NSYMR64	NSYMB64	NSYMPP64	NSYDLA48P	NSYDPLM250	NSYCS400PLM
747	536	300	NSYMM75	NSYMS75	NSYMF75	NSYMR75	NSYMB75	NSYMPP75	NSYDLA66 and NSYDLA88	NSYDPLM300	NSYCS500PLM
847	636	300	NSYMM86	NSYMS86	NSYMF86	NSYMR86	NSYMB86	NSYMPP86	NSYDLA84 and NSYDLA112	NSYDPLM300	NSYCS600PLM
1056	852	350	NSYMM108	-	NSYMF108	NSYMR108	NSYMB108	NSYMPP108	NSYDLA234	NSYDPLM350	NSYCS800PLM

Main accessories



External dimensions (mm)			Fixing lugs	Post-fixing device	Floor-mounting pillar	Coupling frame	Cable-gland plate	Internal door	Blanking plates
H	W	D	Page 30	Page 30	Page 29	Page 29	Page 29	Page 31	Page 30
310	215	160	NSYPFPLM32	-	-	-	-	-	NSYCEPLMA
308	255	160	NSYPFPLM	-	-	-	-	NSYPA3025PLM	-
430	330	200	NSYPFPLM	NSYSFP300	-	-	-	NSYPAP43	NSYCEPLMB
530	430	200	NSYPFPLM	NSYSFP400	NSYSFSPLM	-	-	NSYPAP54	NSYCEPLMB
647	436	250	NSYPFPLM	NSYSFP400	NSYSFSPLM	-	-	NSYPAP64	NSYCEPLMC
747	536	300	NSYPFPLM	NSYSFP500	-	NSYBUPLM	NSYTLA4420	NSYPAP75	NSYCEPLMC
847	636	300	NSYPFPLM	NSYSFP600	-	NSYBUPLM	NSYTLA4420	NSYPAP86	NSYCEPLMC
1056	852	350	NSYPFPLM	-	-	NSYBU108PLM	NSYTLA6420	NSYPAP108	-

Document pocket

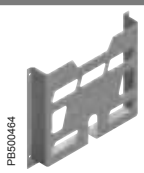

Water drain plug



Page 35

Rail-fixing nuts

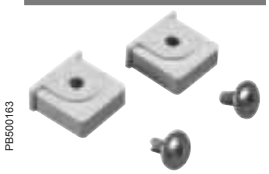

Page 34

Ventilation louvre



Page 35

Composition accessories
Base accessories


PB501746


PB501747

ZM plinth for PLM enclosure

Designed to support and raise enclosures NSYPLM75, NSYPLM86 and NSYPLM108.
- Polyester material reinforced with fibreglass, moulded by hot compression.
- Guarantees total insulation according to IEC 61439-1.
- Ensures a degree of protection of IP 44 and impact resistance of IK 10.
- Plinth height of 200 mm; stackable to obtain a 400-mm plinth.
- Four floor-attachment points; the symmetry of the parts prevents incorrect assembly.

The frontal parts of the plinth (front and rear) have two stainless-steel screws protected by a plastic cap; these screws make it possible (using an Allen key) to open and remove the frontal parts for easier cable installation.
In stacked position, the bottom plinth can be partially buried.
It is provided with one transverse reinforcement rail, adjustable to adapt to the position of the cables.
The reference of the plinth contains all the accessories required for attaching the enclosure to the plinth and for stacking two plinths.

For enclosure				Plinth				Cabling area	
Height	Width	Depth	Reference	Height	Width	Depth	Reference	Width	Depth
747	536	300	**NSYPLM75**	200	456	302	**NSYZM253**	256	252
847	636	300	**NSYPLM86**	200	556	302	**NSYZM263**	356	252
1056	852	350	**NSYPLM108**	200	772	352	**NSYZM283**	572	302


PB501748

Cable supporting cross-rail

The lateral sides of the plinths are provided with bosses for attaching cross-rails with cut-out profiles, for supporting cables.
The reference of the cross-rail includes all the elements required for assembly.

For plinth	Cross-rail
NSYZM253	**NSYAC280**
NSYZM263	**NSYAC360**
NSYZM283	**NSYAC600**

Kit for IP 54

Makes it possible to obtain IP 54 for the plinth and the plinth-enclosure coupling.
Ref. **NSYAEPZM**.


PB501749

Feet for partially buried installation

Allows the partially buried installation of plinths before completion of the floor. The plinths are attached by four feet with a standard length of 750 mm.
Possibility of horizontal adjustment of the plinth.
The reference includes a kit made up of four feet and fixings.
Ref. **NSYAEBFZ**.

Composition accessories


PB500158

Coupling accessories

Coupling frame

- Allows the lateral coupling of 2 enclosures.
- Polyester frame, RAL 7032 colour and fixings.
- A built-in sealing gasket guarantees a protection rating of IP 66.

External dimensions (mm)	Entry	For wall-mounting enclosure	References
435 × 185 × 15	398 × 148	**NSYPLM75** and **NSYPLM86**	**NSYBUPLM**
635 × 185 × 15	598 × 148	**NSYPLM108**	**NSYBU108PLM**

Base accessories


PB501333

Floor-mounting pillar

- To protect cables entering the enclosure in outdoor installations.
- Material: polyester reinforced with fibreglass. RAL 7032 grey colour.
- Delivered with steel frame for secure fixing to the floor.
- Cable entry section: 165 × 100 mm.
- For enclosures ref. **NSYPLM54**, **NSYPLM54T**, **NSYPLM64** and **NSYPLM64T**.

Name	Reference
Floor-mounting pillar	**NSYSFSPLM**

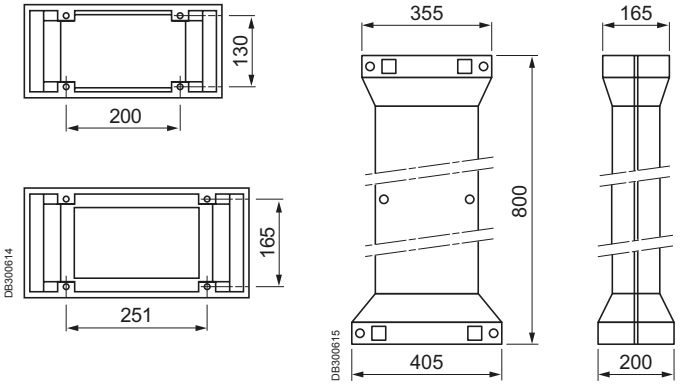

Cable-entry accessories


PB500159

Cable-gland plates

- Material: polyester.
- Dimensions: 435 × 185 mm and 635 × 185 mm.

For wall-mounting enclosures	References
NSYPLM75 and NSYPLM86	**NSYTLA4420**
NSYPLM108	**NSYTLA6420**

Composition accessories
Fixing accessories


PB501330

The enclosures can be mounted directly on the walls. The seals and caps supplied as standard with the enclosure guarantee that it maintains its degrees of protection and insulation.


PB501331
NSYPFPLM32


PB500155
NSYPFPLM


PB501332
NSYPFXPLM

Wall-fixing lugs

- Set of 4 wall-fixing lugs.
- Mounted directly on the enclosure, either in horizontal position or in vertical position.
- Available in 2 versions, polyamide loaded with fibreglass or stainless steel.
- Delivered with fixings.
- Acceptable load of 300 kg in vertical position and 100 kg in horizontal position.

Material	References
Polyamide	**NSYPFPLM** (1)
Stainless steel	**NSYPFXPLM** (1)

(1) Single reference in polyamide, ref. **NSYPFPLM32**, for enclosure ref. **NSYPLM32** and **NSYPLM32T**.


PB500156

Post-fixing device

- For outdoor installations on a post with a maximum circumference of 675 mm, Ø 215 mm.
- Material: galvanised steel.
- Supply of the rail, the strips and the fixings. Maximum load: 100 kg.

For wall-mounting enclosure	References
NSYPLM43	**NSYSFP300** (1)
NSYPLM54 and NSYPLM64	**NSYSFP400**
NSYPLM75	**NSYSFP500**
NSYPLM86	**NSYSFP600**

(1) **NSYSFP300** can be used for fixation of **NSYPLM32**; the length of the cross rail is slightly larger than enclosure.

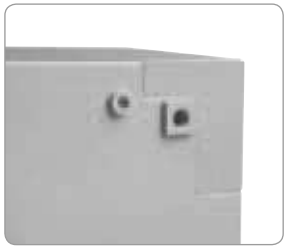
PB501334

Blanking plates

- Made from thermoplastic material, they are positioned on the rear surface of the enclosures to block the openings in the corners in order to improve their appearance or prevent the entry of unwanted elements in the ventilation shaft.
- Supplied as standard for enclosure, ref. **NSYPLM108**.

For wall-mounting enclosure	References
NSYPLM32	**NSYCEPLMA**
NSYPLM43 and NSYPLM54	**NSYCEPLMB**
NSYPLM64, 75 and 86	**NSYCEPLMC**

Composition accessories
Door and door accessories


PB501335

Internal door

- Reversible door made from polyester reinforced with fibreglass, self-extinguishing, RAL 7032 grey.
- Grid pattern with a pitch of 25 mm for easier marking out before drilling.
- Closes with 2 double-bar locks.
- Door handle.
- Delivered with fixings and brass inserts.
- Steel internal door, without grid pattern and locking by a screw, for enclosures ref. **NSYPLM3025**.
- Incompatible with the modular distribution chassis.

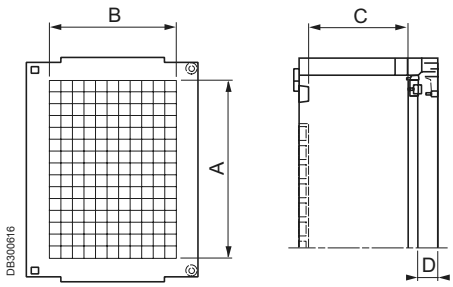

For wall-mounting enclosure (mm)		Dimensions (mm)				References
Height	Width	A	B	C	D	
308	255	248	165	62	76	**NSYPA3025PLM**
430	330	315	205	152	26	**NSYPAP43**
530	430	415	305	152	26	**NSYPAP54**
645	435	515	305	194	32	**NSYPAP64**
745	535	615	405	244	32	**NSYPAP75**
845	635	715	505	244	32	**NSYPAP86**
1055	850	850	650	269	37	**NSYPAP108**

Composition accessories
Locking system


PB501336

Locks and inserts for enclosures with H ≤ 847 mm

- The ABS/PC 310 × 215 mm enclosure is supplied with a lock with a double-bar insert as standard.
- The 308 × 255 mm enclosure is supplied with two locks with a double-bar insert as standard.
- The polyester enclosures from 430 to 847 mm high are delivered as standard with:

– 2 locks with double-bar insert, ref. **NSYCDBPLM**.
– Or a 3-point closure with handle and lock with key 1242 E (enclosures **NSYPLM••V**).

- Double-bar insert ref. **NSYTDBCRN**, is placed in a rectangular escutcheon.
- A plastic key, ref. **NSYDBP**, enabling the opening of the double-bar insert, is included in the standard supply. This key can be fixed to the double-bar system to remain on the enclosure and be used as a handle.

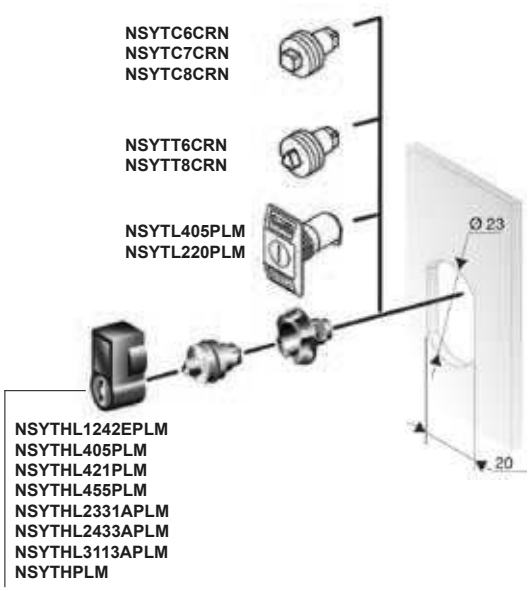

PB501337

Options to transform the locks with double-bar inserts

- Changing the shape inserts for locks with keys according to the following table:

Name	References
6 mm male square	**NSYTC6CRN**
7 mm male square	**NSYTC7CRN**
8 mm male square	**NSYTC8CRN**
6.5 mm male triangle	**NSYTT6CRN**
8 mm male triangle	**NSYTT8CRN**
Lock and key 405	**NSYTL405PLM**
Lock and key 220	**NSYTL220PLM**

- Replacement for locking handle with cylindrical barrel, delivered with all the parts required to change the lock.

Type of barrel	References
Key 1242 E	**NSYTHL1242EPLM**
Key 405	**NSYTHL405PLM**
Key 421	**NSYTHL421PLM**
Key 455	**NSYTHL455PLM**
Key 2331 A	**NSYTHL2331APLM**
Key 2433 A	**NSYTHL2433APLM**
Key 3113 A	**NSYTHL3113APLM**
Manual	**NSYTHPLM**

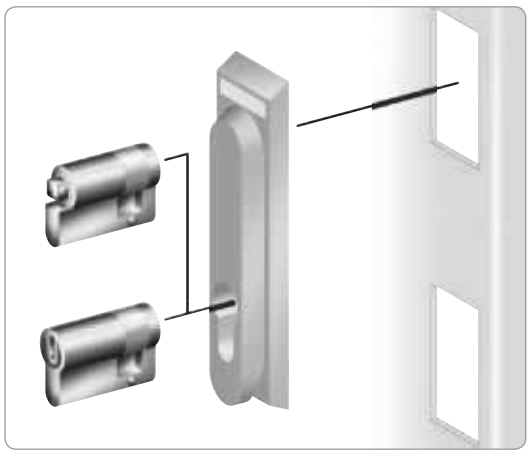
PB501338

Options to transform versions NSYPLM••V, with retractable handle and 3-point closure

- Transformation of the standard insert (barrel for key 1242E, ref. **NSYTL1242EME**) for other shape inserts or barrels according to the following table:

Name	References
5 mm double bar	**NSYTDB5ME**
6 mm male square	**NSYTC6ME**
7 mm male square	**NSYTC7ME**
8 mm male square	**NSYTC8ME**
6.5 mm male triangle	**NSYTT6ME**
8 mm male triangle	**NSYTT8ME**
Barrel and key 405	**NSYTCL405ME**
Reinforced key and barrel	**NSYTLRME**
JIS key and barrel	**NSYTLJISME**
Manual	**NSYTMME**

Composition accessories
Locking system

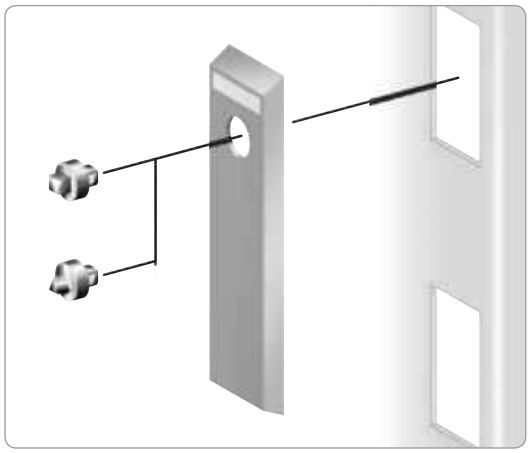
PB501339

Locks and inserts for enclosures NSYPLM108/T

- Enclosures delivered as standard with 5 mm double-bar insert.
- Insert ref. **NSYTDB5PL**, placed in a long rectangular escutcheon, activates a 4-point closure system.

Options to transform the insert

- The standard insert can be replaced with other shape inserts, according to the following table:

Name	References
6 mm male square	**NSYTC6PL**
7 mm male square	**NSYTC7PL**
8 mm male square	**NSYTC8PL**
6.5 mm male triangle	**NSYTT6PL**
7 mm male triangle	**NSYTT7PL**
8 mm male triangle	**NSYTT8PL**

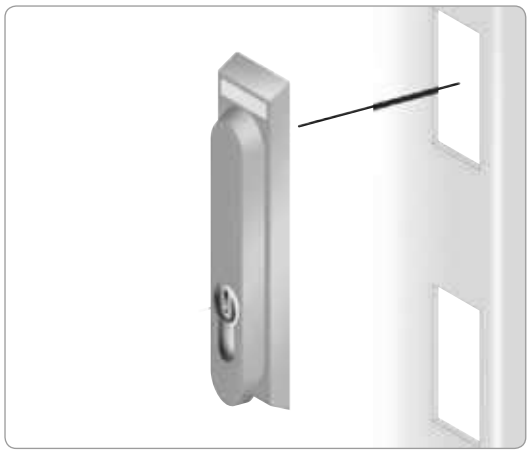
PB501340

Options to transform for a retractable handle

- The escutcheon and rosette assembly can be replaced with a lock with retractable handle equipped with inserts or barrels, according to the following table:

Name	References
5 mm double bar	**NSYTEDB5PL**
6 mm male square	**NSYTEC6PL**
7 mm male square	**NSYTEC7PL**
8 mm male square	**NSYTEC8PL**
6.5 mm male triangle	**NSYTET6PL**
7 mm male triangle	**NSYTET7PL**
8 mm male triangle	**NSYTET8PL**
Lock key 1242 E	**NSYTEL1242EPL**
Barrel and key 405	**NSYTEL405PL**
Reinforced key and barrel	**NSYTERPL**
JIS key and barrel	**NSYTELJISPL**
FAC key and barrel	**NSYTELFACPL**
Manual	**NSYTEMPL**

Padlocking accessories


PB501341

- Padlocking system, ref. **NSYKPLM**, positioned around the rectangular escutcheon of the enclosures with a height of ≤ 847 mm to block access to the lock; for a ∅ 9 mm padlock.

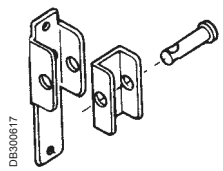
DB300617

- Padlocking system, ref. **NSYBCPL**, positioned around the long rectangular escutcheon of the enclosures ref. **NSYPLM108/T**, to block access to the lock; for a ∅ 9 mm padlock.

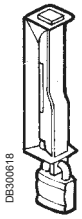
DB300618

- Padlocking system, ref. **NSYBCME**, to block access to the retractable handle, for the versions **NSYPLM●●V** or optionally for enclosures ref. **NSYPLM108/T**, for a ∅ 9 mm padlock.

Mounting accessories


PB500149

Step slides

For depth adjustment of the mounting plate

- Kit including 4 step slides with brackets, allowing depth adjustment with a pitch of 12.5 mm, and the fixings required for the installation.
- Material: galvanised steel.
- Incompatible with the modular distribution chassis.

For wall mounting enclosure	Depth adjustment		References
Depth (mm)	Dimension A (mm)	Dimension B (mm)	
200	156	94	**NSYDPLM200**
250	200	100	**NSYDPLM250**
300	250	100	**NSYDPLM300**
350	306	106	**NSYDPLM350**

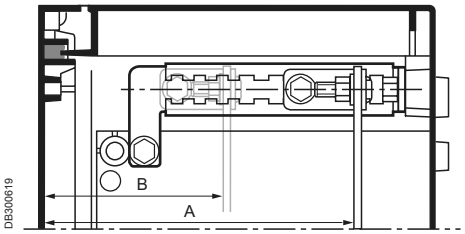

DB300619

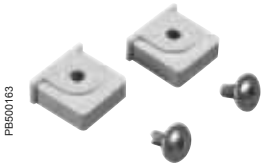
PB500163

Plastic nuts for rail fixing

- They slide directly into the notches, with a pitch of 25 mm, which are located on the rear of the enclosures, except enclosure ref. **NSYPLM3025/T**. They allow direct fixing of symmetrical DIN rails by self-tapping screws. Option of raising the rails with an M6 spacer using a plastic nut containing an M6 nut.

References by unit. Order by multiples of 20 units (20, 40, 60, etc.).

Name	References
Plastic nut with self- tapping screw	**NSYTCSPLM**
Plastic nut containing an M6 metal nut	**NSYTCSM6PLM**


PB501342

35 mm symmetrical DIN rails

- They are fixed to the rear of the enclosure without uprights, with a pitch of 25 mm for the notches on the rear of the enclosure, with the help of direct-fixing nuts ref. **NSYTCSPLM** or **NSYTCSM6PLM**.
- Treated steel.

References by unit. Order by multiples of 2 units (2, 4, 6, etc.).

Rail length (mm)	For wall mounting enclosure	References
	Width (mm)	
180	215	**NSYCS200PLM**
280	330	**NSYCS300PLM**
380	430 / 436	**NSYCS400PLM**
480	536	**NSYCS500PLM**
580	636	**NSYCS600PLM**
795	852	**NSYCS800PLM**

Accessories
Diverse


PB501343

NSYTEX8 NSYTEX6 NSYTEX5

Fixing inserts

- Expanding inserts for addition to the M6 bosses of the enclosure, the M5 or M6 bosses of the door and the M8 bosses of the external rear part of the enclosure.
- M5 and M6 inserts to be ordered in multiples of 20.

References by unit. Order by multiples of 8 units (8, 16, 24, etc.).

Insert size	For wall-mounting enclosure	References
M5	**NSYPLM43** and **NSYPLM54**	**NSYTEX5**
M6	**NSYPLM64** and **NSYPLM108**	**NSYTEX6**
M8	For the rear of the enclosure	**NSYTEX8**


PB500164

NSYCAG35LP

Ventilation louvres

- They can be positioned inside the wall-mounting enclosures with heights of 430 to 846 mm, allowing ventilation through the channels of the enclosure.
- The IP on the rear of the enclosures is IP 44.

References by unit. Order by multiples of 2 units (2, 4, 6, etc.).

Name	Reference
Ventilation louvres	**NSYCAG35LP**

Ventilation louvres, airing devices with filters, fans and thermal adjustment accessories, see ClimaSys section.


PB500162

NSYVEA9

Water drain plug

- For drainage of condensation water.
- It is placed in the ∅ 9 mm housing at the bottom of the enclosure.
- IP 55.

References by unit. Order by multiples of 10 units (10, 20, 30, etc.).

Name	Reference
Water drain plug	**NSYVEA9**



PB500191

Renovation and anti-graffiti paint

- Paint system with 2 components (base 80% + hardener 20%), specially designed for polyester enclosures, for their renovation and/or as prevention to allow easy removal of graffiti.
- The 1 kg reference includes 1 pot with 800 g of base paint and 200 g of hardener. It is enough to paint a surface of around 5 m^2.
- The 5 kg reference includes 1 pot with 4 kg of base paint and 1 kg of hardener. It is enough to paint a surface of around 25 m^2.
- RAL 7032 colour.
- Solvent for diluting the paint and cleaning the utensils.

Name	References
Anti-graffiti paint 1 kg	**NSYAUPG1**
Anti-graffiti paint 5 kg	**NSYAUPG5**
Anti-graffiti paint solvent 500 g	**NSYAUPGS**

Power distribution accessories
Modular distribution accessories



For ranges S3D*, CRN, S3X, PLM

* Minimum depth 200 mm.

Technical characteristics

Dinimel DLA modular chassis

- Front panels and finish covers, made from self-extinguishing insulating material RAL 7032 colour. Rigid galvanised-steel structure, for the installation of modular devices.
- Front panels and covers installed in the front part, are not depth adjustable.
- Open front panels with 35 mm DIN rail and plain front panels with mounting plate, according to the model.
- Quick installation with no fixings.
- Shoulder height adjustable from 40 to 85 mm.
- System for standard circuit marking.
- Incompatible with the internal doors and the step slides.
- Neutral / earth strip: 2 × 16 mm² + 5 × 6 mm².

Dimensions (mm)					Distribution rows				For installation in the enclosures				References
A	B	C	D min.	E min.	Nº of useful rows	No. of 18 mm modules per row	No. of 18 mm modules	No. of plates	PLM enclosure References		S3D (depth ⩾ 200 mm) or CRN enclosure Height	S3D (depth ⩾ 200 mm) or CRN enclosure Width	
216	115	137	38	88	2	12	24	–	**NSYPLM43**	**NSYPLM43T**	400	300	**NSYDLA24**
286	90	112	38	88	3	16	48	–	**NSYPLM54**	**NSYPLM54T**	500	400	**NSYDLA48**
286	140	170	80	130	3	16	48	–	**NSYPLM64**	**NSYPLM64T**	600	400	**NSYDLA48P**
395	115	145	129	179	3	22	66	1	**NSYPLM75**	**NSYPLM75T**	700	500	**NSYDLA66**
395	115	145	129	179	4	22	88	–	**NSYPLM75**	**NSYPLM75T**	700	500	**NSYDLA88**
504	165	195	129	179	3	28	84	1	**NSYPLM86**	**NSYPLM86T**	800	600	**NSYDLA84**
504	165	195	129	179	4	28	112	–	**NSYPLM86**	**NSYPLM86T**	800	600	**NSYDLA112**
704	115	146	170	220	6	39	234	–	**NSYPLM108**	**NSYPLM108T**	1000	800	**NSYDLA234**

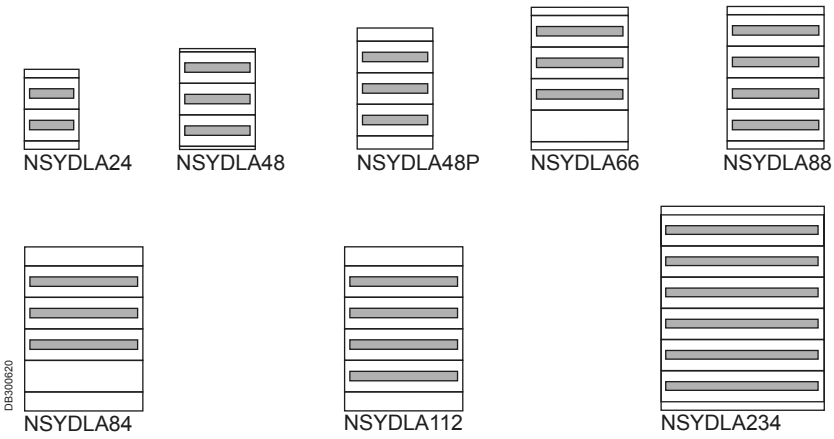

Power distribution accessories
Modular distribution accessories

Dimensions (mm)

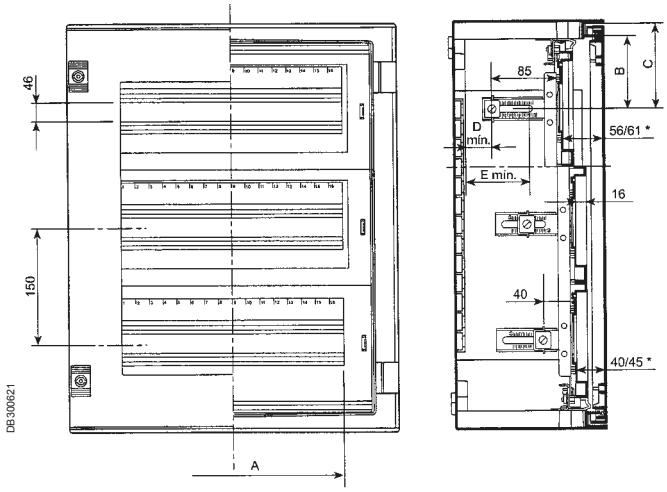

* Models NSYDLA48P, 66, 88, 84 and 112.



Plain front panels for Dinimel DLA chassis

- Front panel made from RAL 7032 self-extinguishing insulating material for non-modular device protection, on one row.
- To be ordered in multiples of 2.

For installing on the chassis	Width (mm)	References
NSYDLA24	256	**NSYCTL300DLA**
NSYDLA48 and NSYDLA48P	356	**NSYCTL400DLA**
NSYDLA66 and NSYDLA88	456	**NSYCTL500DLA**
NSYDLA84 and NSYDLA112	555	**NSYCTL600DLA**
NSYDLA234	755	**NSYCTL800DLA**



Mounting plate for Dinimel DLA chassis

- Galvanised-steel mounting plate for mounting non-modular devices, on one row.
- To be ordered in multiples of 2.

For installing on the chassis	Width (mm)	References
NSYDLA48 and NSYDLA48P	315	**NSYPMP400DLA**
NSYDLA66 and NSYDLA88	415	**NSYPMP500DLA**
NSYDLA84 and NSYDLA112	514	**NSYPMP600DLA**
NSYDLA234	714	**NSYPMP800DLA**

Modular distribution chassis for enclosure ref. PLM3025/T

- Metal chassis and protective plate in insulating material.
- For mounting modular devices on two rows of nine 18-mm modules.

Name	Reference
Modular distribution chassis	**NSYDLPLM18**

PLM customised solution
Configured and specific
Solution guide



Thalassa PLM configured or specific polyester wall-mounting enclosures

- The configured offer anticipates the most common needs and can optimise delivery times. It only includes polyester enclosures. The configurator on the next page defines the limits of this offer and helps you cost this solution.
- The specific offer allows the greatest variety of customisations. Help to define a specific need is presented on page **7**.
- The advantages and examples of customised solutions are presented on pages **5** and **6**.

Part	Service	Configured	Specific
	Minimum amount		☑
	Maximum amount	☑	
Body and door	Special colour of the material		☑
	Paint colour		☑
	Anti-graffiti paint		☑
Body	Horizontal coupling		☑
	Mounting back-to-back		☑
	Body machining on all surfaces (1)	☑	☑
	Lugs at a given location		☑
	Mounting (or supply) of standard accessories of the configured offer (2)	☑	☑
	Mounting (or supply) of other standard accessories of Thalassa PLM		☑
	Mounting (or supply) of other standard common accessories		☑
Door	Machining in the door (1)	☑	
	Special glass (dimensions) or window		☑
	Standard catalogue locks (2)	☑	☑
	Special locks not included in the catalogue		To be studied
	Mounting (or supply) of standard accessories of the configured offer (2)	☑	☑
	Mounting (or supply) of other standard accessories of Thalassa PLM		☑
	Mounting (or supply) of other standard common accessories		☑
Mounting plates and rails	Standard mounting plate	☑	☑
	Special mounting plate		To be studied
	Special machining of mounting plate		☑
Cable-gland plates and accessories	Installation of common cable-gland plates and/or cable entries		☑
	Installation of common cable-management accessories		☑
Thermal	Installation of airing devices, fans (2)	☑	☑
Diverse	Machining of the internal door or the cable-gland plates		☑
	Special installation accessories: plinths, external mounting plates, supports, etc.		To be studied
	Other accessories		To be studied
	Special marking		☑
	Special packaging		☑

(1) See areas in DXF diagram.
(2) The accessories included or installed in the configured offer are shown in the configuration sheet on the next page.

PLM configured solution
Configuration sheet

Configured



Document to be sent to your sales office by e-mail or fax

YOUR CONTACT DETAILS

Full name: _____

Company: _____

Address: _____

Tel.: _____ Fax: _____

E-mail: _____

NUMBER OF ENCLOSURES .....

GLAZED DOOR ☐ PLAIN DOOR ☐

HINGES ON THE LEFT ☐

REFERENCE

OR CATALOGUE DIMENSIONS (mm)

HEIGHT	WIDTH	DEPTH	
307	/ 255	/ 164	☐
430	/ 330	/ 200	☐
530	/ 430	/ 200	☐
647	/ 436	/ 250	☐
747	/ 536	/ 300	☐
847	/ 636	/ 300	☐
1056	/ 852	/ 350	☐

Choice of standard configured accessories

Also tick the red box m *for accessories installed at the plant.*

LUGS
- POLYESTER ☐
- STAINLESS STEEL ☐

OUTLET GRILLE ☐ m ☐
REF. NSYCAG125LPF
(RAL 7035)

FAN ☐ m ☐
REF. NSYCVF85M230PF
(RAL 7035)

THERMOSTAT ☐
REF. NSYCCOTHO

PURGE ☐ m ☐

STEP SLIDES ☐ m ☐

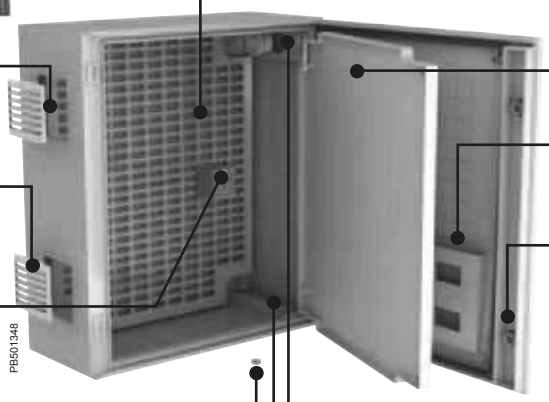

REAR MOUNTING PLATE
- PLAIN ☐ m ☐
- TELEQUICK ☐ m ☐
- MODULAR CHASSIS ☐ m ☐

☐ INTERNAL DOOR (installed)

☐ DOCUMENT LIP

LOCK MODIFICATION
- SQUARE 7 mm ☐
- SQUARE 8 mm ☐
- TRIANGLE 8 mm ☐
- PADLOCKING ☐

INTERNAL VENTILATION LOUVRES (SET OF 2) ☐ m ☐

Eventual incompatibilities between accessories can't be considered in configurator sheet.

PLM configured solution
Configuration sheet

Configured



Machining

For a quick calculation, please indicate the total number of machining operations required:

ON THE BODY (REAR AND SURFACES)	
FOR GRILLES, FANS, PURGES AND AIRING DEVICES	
OTHER MACHINING OPERATIONS	
ON THE DOOR	

NOTE: Every drill-hole or cut-out counts as a machining operation. The machining areas are indicated on the DXF diagrams.

Download the configuration sheets and the DXF diagrams from our websites.
Send them back to your sales office with your modifications.
Mandatory when ordering to guarantee configured offer delivery times.

Specific

Other needs, other constraints? contact us.
A specific offer will meet all your requirements. Help to define a specific need is presented on page **7**.

Advantages of our customised offer and implementation examples. See pages **5** and **6**.

Polyester floor-standing enclosures

Service life

High resistance to corrosion in harsh environments, maintaining its mechanical and insulation properties.

Safety

- Full insulation (to create class II units).
- No risk to the public.
- Lock with 2 or 4-point closure.

Protection

- IP 44 or 54 and IP 65 in the industrial version.
- Polyurethane gasket.
- Lock outside sealed area.

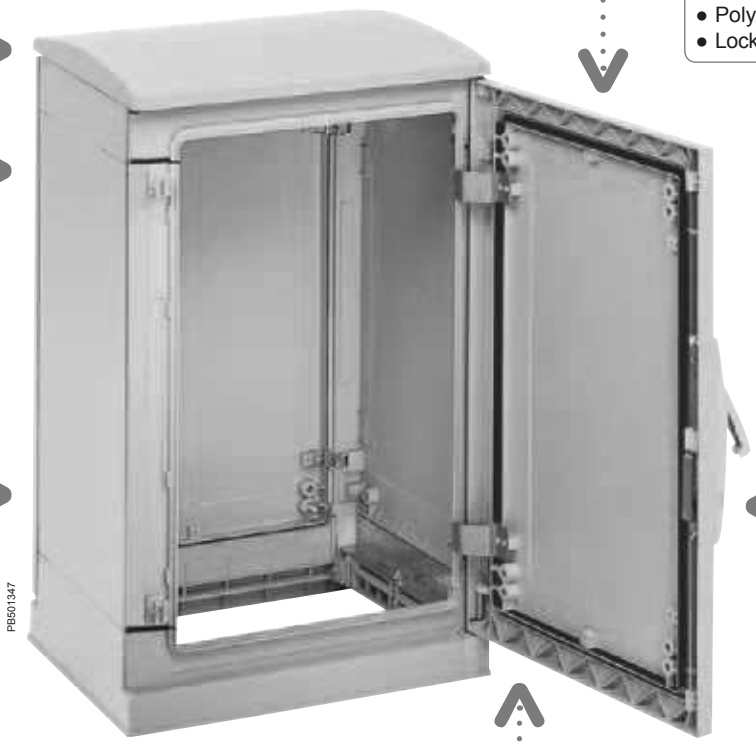

Choice

4 enclosure versions, available in 40 dimensions with 3-door versions.

Smart

- Door with ripped surface to avoid posting.
- Reversible door (1-door enclosure).
- Numerous fixing bosses on the doors and panels.

Easy

- Opening to 120° or 180°.
- The central upright can be removed.
- Numerous fixing points.

Applications

- Industry or infrastructures in harsh environments.
- Accessories for modular distribution and 19".

Customisation

- Configured: machining and accessories.
- Specific: non-standard colours and accessories.
- Every possible combination of versions and doors, front and rear, not included in the standard offer.

General characteristics of the floor-standing enclosure

- Indoor or outdoor use.
- 4 versions:
  – Completely sealed enclosure (PLA version).
  – Enclosure with ventilated canopy (PLAT version).
  – Enclosure with plinth-type open bottom (PLAZ version).
  – Enclosure with plinth-type open bottom and ventilated canopy (PLAZT version).
  – Note: The first letters of the references relate to the version.
- 40 dimensions:
  – 5 heights: 500, 750, 1000, 1250, 1500 mm.
  – 4 widths: 500 and 750 (1 door), 1000 and 1250 mm (2 doors).
  – 2 depths: 320 and 420 mm.
  – Note: The figures included in the references of the enclosures and products of the range represent the dimension in dm of the product in question.
  – The 2-door enclosures comprise a central upright, which can be removed in certain conditions. Please contact us.
- 3 types of door:
  – Plain door.
  – Door with transparent window (index T at the end of the reference).
  – Door with anti-posting surface (index R at the end of the reference).
- Protection degree IP 65 or IP 54 according to standard IEC 60529.
- Impact resistance IK 10 for the plain doors and all sides and IK 08 for the glazed door.
- 2-point closure for heights of 500 and 750 mm and 4-point closure points for heights ≥ 1000 mm.

Characteristics of the material

The floor-standing enclosures are made from polyester reinforced with fibreglass, moulded by hot compression, RAL 7032 grey. This material:

- Is insulating: > 15 kV per mm.
- Can be machined easily.
- Is resistant to corrosion: does not rust and can withstand many chemical substances.
- Resists bad weather (rain, UV).
- Withstands cold and heat in the range of –50 °C…+150 °C.
- Does not soften under heat (ball resistance at +150 °C).
- Is self-extinguishing (does not propagate fire: HB40 classification and self-extinguishing in several seconds during the glow-wire test at 960 °C during 30 s.).
- Does not contain halogens.
- Releases little smoke and nontoxic smoke in the case of combustion.
- Is light.

Characteristics of the production process

The components of the enclosures (the various sides and doors) are moulded by hot compression: the pieces have an excellent finish on both sides and can include numerous bosses for accommodating inserts and mounting or cable management accessories.

Complies with enclosure standard IEC 62208 for:

IP, IK, resistance to heat and fire, insulation 5000 V, resistance to bad weather and corrosion and resistance to internal loads (150 kg/m^2) and loads on the door (30 kg/m^2).

Full insulation to create class II units according to IEC 64139-1

UL certification and NEMA classification 4X, 5, 12 and 13, depending on the version

Complies with RoHS and REACH Directives

Completely sealed enclosures, IP 65
Introduction


PB501353

Completely sealed enclosure with plain door.


PB501354

Transparent door made from polyester and tempered glass.


PB500192

Escutcheon with double-bar insert.


PB501355

Detail from the internal locking system.

Characteristics of the PLA version

- Enclosure obtained by assembling:
  – 1 sealed top part.
  – 1 sealed bottom part.
  – 2 side parts.
  – 1 or 2 rear panels (according to width).
  – 1 or 2 doors (according to width).
- Indoor use.
- Outdoor use possible with a canopy (to be ordered separately).
- Protection degree IP 65 according to IEC 60529.
- Locking system with escutcheon and 5-mm double-bar insert, included in the standard supply. Other inserts or locks with handles optionally available.
- Door opening to 120°.
- Direct fixing to the floor or by means of a plinth with a height of 60 mm, as an option, see page **54**.
- Possibility of fixing on a semi-embedded plinth, see page **55**.
- Optional wall-fixing lugs.


PB500165


PB500166


PB500167

External dimensions (mm)				References of enclosures with door		
Height	Width	Depth	N° of doors	Plain	Glazed	Anti-posting
500	500	320	1	**NSYPLA553**	**NSYPLA553T**	**NSYPLA553R**
500	500	420	1	**NSYPLA554**	**NSYPLA554T**	**NSYPLA554R**
500	750	320	1	**NSYPLA573**	**NSYPLA573T**	**NSYPLA573R**
500	750	420	1	**NSYPLA574**	**NSYPLA574T**	**NSYPLA574R**
500	1000	320	2	**NSYPLA5103**	**NSYPLA5103T**	**NSYPLA5103R**
500	1000	420	2	**NSYPLA5104**	**NSYPLA5104T**	**NSYPLA5104R**
500	1250	320	2	**NSYPLA5123**	**NSYPLA5123T**	**NSYPLA5123R**
500	1250	420	2	**NSYPLA5124**	**NSYPLA5124T**	**NSYPLA5124R**
750	500	320	1	**NSYPLA753**	**NSYPLA753T**	**NSYPLA753R**
750	500	420	1	**NSYPLA754**	**NSYPLA754T**	**NSYPLA754R**
750	750	320	1	**NSYPLA773**	**NSYPLA773T**	**NSYPLA773R**
750	750	420	1	**NSYPLA774**	**NSYPLA774T**	**NSYPLA774R**
750	1000	320	2	**NSYPLA7103**	**NSYPLA7103T**	**NSYPLA7103R**
750	1000	420	2	**NSYPLA7104**	**NSYPLA7104T**	**NSYPLA7104R**
750	1250	320	2	**NSYPLA7123**	**NSYPLA7123T**	**NSYPLA7123R**
750	1250	420	2	**NSYPLA7124**	**NSYPLA7124T**	**NSYPLA7124R**
1000	500	320	1	**NSYPLA1053**	**NSYPLA1053T**	**NSYPLA1053R**
1000	500	420	1	**NSYPLA1054**	**NSYPLA1054T**	**NSYPLA1054R**
1000	750	320	1	**NSYPLA1073**	**NSYPLA1073T**	**NSYPLA1073R**
1000	750	420	1	**NSYPLA1074**	**NSYPLA1074T**	**NSYPLA1074R**
1000	1000	320	2	**NSYPLA10103**	**NSYPLA10103T**	**NSYPLA10103R**
1000	1000	420	2	**NSYPLA10104**	**NSYPLA10104T**	**NSYPLA10104R**
1000	1250	320	2	**NSYPLA10123**	**NSYPLA10123T**	**NSYPLA10123R**
1000	1250	420	2	**NSYPLA10124**	**NSYPLA10124T**	**NSYPLA10124R**
1250	500	320	1	**NSYPLA1253**	**NSYPLA1253T**	**NSYPLA1253R**
1250	500	420	1	**NSYPLA1254**	**NSYPLA1254T**	**NSYPLA1254R**
1250	750	320	1	**NSYPLA1273**	**NSYPLA1273T**	**NSYPLA1273R**
1250	750	420	1	**NSYPLA1274**	**NSYPLA1274T**	**NSYPLA1274R**
1250	1000	320	2	**NSYPLA12103**	**NSYPLA12103T**	**NSYPLA12103R**
1250	1000	420	2	**NSYPLA12104**	**NSYPLA12104T**	**NSYPLA12104R**
1250	1250	320	2	**NSYPLA12123**	**NSYPLA12123T**	**NSYPLA12123R**
1250	1250	420	2	**NSYPLA12124**	**NSYPLA12124T**	**NSYPLA12124R**
1500	500	320	1	**NSYPLA1553**	**NSYPLA1553T**	**NSYPLA1553R**
1500	500	420	1	**NSYPLA1554**	**NSYPLA1554T**	**NSYPLA1554R**
1500	750	320	1	**NSYPLA1573**	**NSYPLA1573T**	**NSYPLA1573R**
1500	750	420	1	**NSYPLA1574**	**NSYPLA1574T**	**NSYPLA1574R**
1500	1000	320	2	**NSYPLA15103**	**NSYPLA15103T**	**NSYPLA15103R**
1500	1000	420	2	**NSYPLA15104**	**NSYPLA15104T**	**NSYPLA15104R**
1500	1250	320	2	**NSYPLA15123**	**NSYPLA15123T**	**NSYPLA15123R**
1500	1250	420	2	**NSYPLA15124**	**NSYPLA15124T**	**NSYPLA15124R**

Enclosures with ventilated canopy IP 44
Introduction


PB500215

Enclosure with ventilated canopy and plain door.

Characteristics of the PLAT version

- Enclosure obtained by assembling:
  – 1 open top part with canopy.
  – 1 sealed bottom part.
  – 2 side parts.
  – 1 or 2 rear panels (according to width).
  – 1 or 2 doors (according to width).
- Outdoor use.
- Protection degree IP 44 according to IEC 60529.
- Protection degree IP 54 with 1 or 2 internal grilles, ref. **NSYCAG125LPF**, to be ordered separately.
- Locking system with handle with a 5-mm double-bar insert block, included in the standard supply. Other blocks with inserts or barrels and keys optionally available.
- Door opening to 120°.
- Direct fixing to the floor or by means of a plinth with a height of 60 mm, as an option, see page **54**.
- Possibility of fixing on a semi-embedded plinth, see page **55**.
- Optional wall-fixing lugs.


PB500170


PB500171


PB501356

Open top part with canopy allowing for ventilation.


PB500193

External handle.


PB501357

Door with anti-posting surface and additional reinforcement.


PB501358

Various bosses for M8 inserts.

External dimensions (mm)				References of enclosures with door	
Height	Width	Depth	N° of doors	Plain	Anti-posting
500	500	320	1	**NSYPLAT553**	**NSYPLAT553R**
500	500	420	1	**NSYPLAT554**	**NSYPLAT554R**
500	750	320	1	**NSYPLAT573**	**NSYPLAT573R**
500	750	420	1	**NSYPLAT574**	**NSYPLAT574R**
500	1000	320	2	**NSYPLAT5103**	**NSYPLAT5103R**
500	1000	420	2	**NSYPLAT5104**	**NSYPLAT5104R**
500	1250	320	2	**NSYPLAT5123**	**NSYPLAT5123R**
500	1250	420	2	**NSYPLAT5124**	**NSYPLAT5124R**
750	500	320	1	**NSYPLAT753**	**NSYPLAT753R**
750	500	420	1	**NSYPLAT754**	**NSYPLAT754R**
750	750	320	1	**NSYPLAT773**	**NSYPLAT773R**
750	750	420	1	**NSYPLAT774**	**NSYPLAT774R**
750	1000	320	2	**NSYPLAT7103**	**NSYPLAT7103R**
750	1000	420	2	**NSYPLAT7104**	**NSYPLAT7104R**
750	1250	320	2	**NSYPLAT7123**	**NSYPLAT7123R**
750	1250	420	2	**NSYPLAT7124**	**NSYPLAT7124R**
1000	500	320	1	**NSYPLAT1053**	**NSYPLAT1053R**
1000	500	420	1	**NSYPLAT1054**	**NSYPLAT1054R**
1000	750	320	1	**NSYPLAT1073**	**NSYPLAT1073R**
1000	750	420	1	**NSYPLAT1074**	**NSYPLAT1074R**
1000	1000	320	2	**NSYPLAT10103**	**NSYPLAT10103R**
1000	1000	420	2	**NSYPLAT10104**	**NSYPLAT10104R**
1000	1250	320	2	**NSYPLAT10123**	**NSYPLAT10123R**
1000	1250	420	2	**NSYPLAT10124**	**NSYPLAT10124R**
1250	500	320	1	**NSYPLAT1253**	**NSYPLAT1253R**
1250	500	420	1	**NSYPLAT1254**	**NSYPLAT1254R**
1250	750	320	1	**NSYPLAT1273**	**NSYPLAT1273R**
1250	750	420	1	**NSYPLAT1274**	**NSYPLAT1274R**
1250	1000	320	2	**NSYPLAT12103**	**NSYPLAT12103R**
1250	1000	420	2	**NSYPLAT12104**	**NSYPLAT12104R**
1250	1250	320	2	**NSYPLAT12123**	**NSYPLAT12123R**
1250	1250	420	2	**NSYPLAT12124**	**NSYPLAT12124R**
1500	500	320	1	**NSYPLAT1553**	**NSYPLAT1553R**
1500	500	420	1	**NSYPLAT1554**	**NSYPLAT1554R**
1500	750	320	1	**NSYPLAT1573**	**NSYPLAT1573R**
1500	750	420	1	**NSYPLAT1574**	**NSYPLAT1574R**
1500	1000	320	2	**NSYPLAT15103**	**NSYPLAT15103R**
1500	1000	420	2	**NSYPLAT15104**	**NSYPLAT15104R**
1500	1250	320	2	**NSYPLAT15123**	**NSYPLAT15123R**
1500	1250	420	2	**NSYPLAT15124**	**NSYPLAT15124R**

Enclosures with plinth-type open bottom part, IP 54

Introduction



Enclosure with open bottom part.

Characteristics of the PLAZ version

- Enclosure obtained by assembling:
  – 1 sealed top part.
  – 1 plinth-type open bottom part.
  – 2 side parts.
  – 1 or 2 rear panels (according to width).
  – 1 or 2 doors (according to width).
- Indoor use.
- Outdoor use with a canopy (to be ordered separately).
- Protection degree IP 54 according to IEC 60529, for the 5 sides of the enclosure.
- Locking system with handle with a 5 mm double-bar insert block, included in the standard supply. Other blocks with inserts or barrels and keys optionally available.
- Door opening to 120°.
- The open bottom part forms a 60 mm plinth which is fixed to the floor directly or by means of an optional fixing frame, see page **55**, or else it is installed on a semi-embedded plinth, see page **54**.

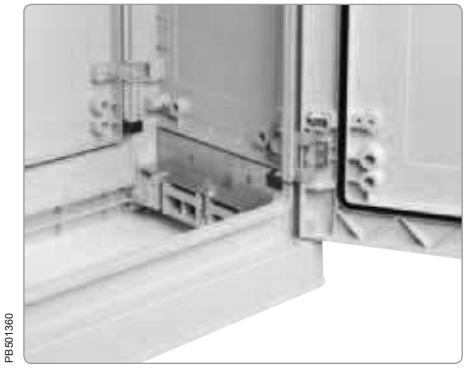

Polyurethane sealing gasket and 120° hinge.

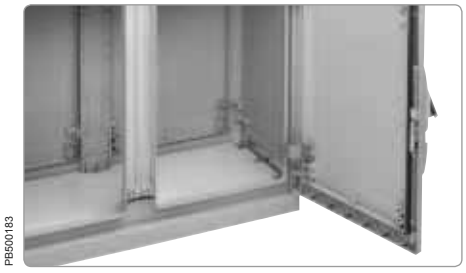

Detail from the plinth-type bottom part, equipped with a cable-entry plate (optional).



Plain mounting plate installed on step slides and compulsory adapter plates in all the enclosures with open bottom part.

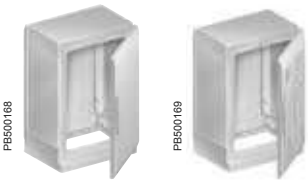

External dimensions (mm)				References of enclosures with door	
Height	Width	Depth	N° of doors	Plain	Anti-posting
500	500	320	1	**NSYPLAZ553**	**NSYPLAZ553R**
500	500	420	1	**NSYPLAZ554**	**NSYPLAZ554R**
500	750	320	1	**NSYPLAZ573**	**NSYPLAZ573R**
500	750	420	1	**NSYPLAZ574**	**NSYPLAZ574R**
500	1000	320	2	**NSYPLAZ5103**	**NSYPLAZ5103R**
500	1000	420	2	**NSYPLAZ5104**	**NSYPLAZ5104R**
500	1250	320	2	**NSYPLAZ5123**	**NSYPLAZ5123R**
500	1250	420	2	**NSYPLAZ5124**	**NSYPLAZ5124R**
750	500	320	1	**NSYPLAZ753**	**NSYPLAZ753R**
750	500	420	1	**NSYPLAZ754**	**NSYPLAZ754R**
750	750	320	1	**NSYPLAZ773**	**NSYPLAZ773R**
750	750	420	1	**NSYPLAZ774**	**NSYPLAZ774R**
750	1000	320	2	**NSYPLAZ7103**	**NSYPLAZ7103R**
750	1000	420	2	**NSYPLAZ7104**	**NSYPLAZ7104R**
750	1250	320	2	**NSYPLAZ7123**	**NSYPLAZ7123R**
750	1250	420	2	**NSYPLAZ7124**	**NSYPLAZ7124R**
1000	500	320	1	**NSYPLAZ1053**	**NSYPLAZ1053R**
1000	500	420	1	**NSYPLAZ1054**	**NSYPLAZ1054R**
1000	750	320	1	**NSYPLAZ1073**	**NSYPLAZ1073R**
1000	750	420	1	**NSYPLAZ1074**	**NSYPLAZ1074R**
1000	1000	320	2	**NSYPLAZ10103**	**NSYPLAZ10103R**
1000	1000	420	2	**NSYPLAZ10104**	**NSYPLAZ10104R**
1000	1250	320	2	**NSYPLAZ10123**	**NSYPLAZ10123R**
1000	1250	420	2	**NSYPLAZ10124**	**NSYPLAZ10124R**
1250	500	320	1	**NSYPLAZ1253**	**NSYPLAZ1253R**
1250	500	420	1	**NSYPLAZ1254**	**NSYPLAZ1254R**
1250	750	320	1	**NSYPLAZ1273**	**NSYPLAZ1273R**
1250	750	420	1	**NSYPLAZ1274**	**NSYPLAZ1274R**
1250	1000	320	2	**NSYPLAZ12103**	**NSYPLAZ12103R**
1250	1000	420	2	**NSYPLAZ12104**	**NSYPLAZ12104R**
1250	1250	320	2	**NSYPLAZ12123**	**NSYPLAZ12123R**
1250	1250	420	2	**NSYPLAZ12124**	**NSYPLAZ12124R**
1500	500	320	1	**NSYPLAZ1553**	**NSYPLAZ1553R**
1500	500	420	1	**NSYPLAZ1554**	**NSYPLAZ1554R**
1500	750	320	1	**NSYPLAZ1573**	**NSYPLAZ1573R**
1500	750	420	1	**NSYPLAZ1574**	**NSYPLAZ1574R**
1500	1000	320	2	**NSYPLAZ15103**	**NSYPLAZ15103R**
1500	1000	420	2	**NSYPLAZ15104**	**NSYPLAZ15104R**
1500	1250	320	2	**NSYPLAZ15123**	**NSYPLAZ15123R**
1500	1250	420	2	**NSYPLAZ15124**	**NSYPLAZ15124R**

Enclosures with plinth-type open bottom part and ventilated canopy, IP 44

Introduction

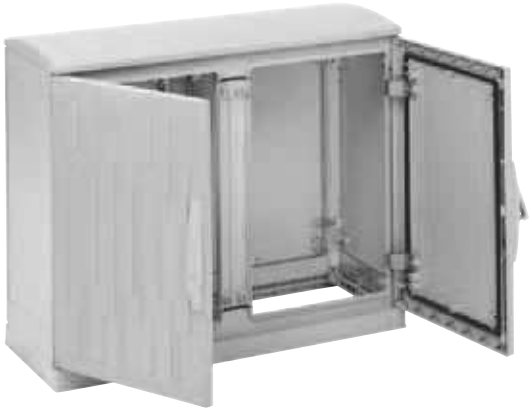
PB501362

Enclosure with plinth-type open bottom part, ventilated canopy and anti-posting door.

Characteristics of the PLAZT version

- Enclosure obtained by assembling:
  – 1 open top part with canopy.
  – 1 plinth-type open bottom part.
  – 2 side parts.
  – 1 or 2 rear panels (according to width).
  – 1 or 2 doors (according to width).
- Outdoor use.
- Protection degree IP 44 according to IEC 60529, for the 5 sides of the enclosure.
- Protection degree IP 54 with 1 or 2 internal grilles, ref. **NSYCAG125LPF**, to be ordered separately.
- Locking system with handle with a 5 mm double-bar insert block. Other blocks with inserts or barrels and keys optionally available.
- Door opening to 180°.
- Anti-lever system to prevent forcing of the door.
- The open bottom part forms a 60 mm plinth which is fixed to the floor directly or by means of an optional fixing frame, see page **55**, or else it is installed on a semi-embedded plinth, see page **54**.

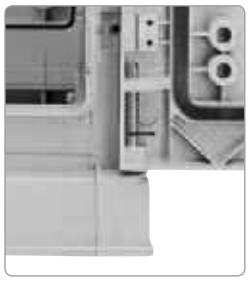
PB501363

Door opening to 180°.


PB501364

Anti-lever security system.


PB501365

Bottom part open for underground cable access.


PB501366

M8 fixing bosses on the inside of the door.


PB500172


PB500173

External dimensions (mm)				References of enclosures with door	
Height	Width	Depth	N° of doors	Plain	Anti-posting
500	500	320	1	**NSYPLAZT553**	**NSYPLAZT553R**
500	500	420	1	**NSYPLAZT554**	**NSYPLAZT554R**
500	750	320	1	**NSYPLAZT573**	**NSYPLAZT573R**
500	750	420	1	**NSYPLAZT574**	**NSYPLAZT574R**
500	1000	320	2	**NSYPLAZT5103**	**NSYPLAZT5103R**
500	1000	420	2	**NSYPLAZT5104**	**NSYPLAZT5104R**
500	1250	320	2	**NSYPLAZT5123**	**NSYPLAZT5123R**
500	1250	420	2	**NSYPLAZT5124**	**NSYPLAZT5124R**
750	500	320	1	**NSYPLAZT753**	**NSYPLAZT753R**
750	500	420	1	**NSYPLAZT754**	**NSYPLAZT754R**
750	750	320	1	**NSYPLAZT773**	**NSYPLAZT773R**
750	750	420	1	**NSYPLAZT774**	**NSYPLAZT774R**
750	1000	320	2	**NSYPLAZT7103**	**NSYPLAZT7103R**
750	1000	420	2	**NSYPLAZT7104**	**NSYPLAZT7104R**
750	1250	320	2	**NSYPLAZT7123**	**NSYPLAZT7123R**
750	1250	420	2	**NSYPLAZT7124**	**NSYPLAZT7124R**
1000	500	320	1	**NSYPLAZT1053**	**NSYPLAZT1053R**
1000	500	420	1	**NSYPLAZT1054**	**NSYPLAZT1054R**
1000	750	320	1	**NSYPLAZT1073**	**NSYPLAZT1073R**
1000	750	420	1	**NSYPLAZT1074**	**NSYPLAZT1074R**
1000	1000	320	2	**NSYPLAZT10103**	**NSYPLAZT10103R**
1000	1000	420	2	**NSYPLAZT10104**	**NSYPLAZT10104R**
1000	1250	320	2	**NSYPLAZT10123**	**NSYPLAZT10123R**
1000	1250	420	2	**NSYPLAZT10124**	**NSYPLAZT10124R**
1250	500	320	1	**NSYPLAZT1253**	**NSYPLAZT1253R**
1250	500	420	1	**NSYPLAZT1254**	**NSYPLAZT1254R**
1250	750	320	1	**NSYPLAZT1273**	**NSYPLAZT1273R**
1250	750	420	1	**NSYPLAZT1274**	**NSYPLAZT1274R**
1250	1000	320	2	**NSYPLAZT12103**	**NSYPLAZT12103R**
1250	1000	420	2	**NSYPLAZT12104**	**NSYPLAZT12104R**
1250	1250	320	2	**NSYPLAZT12123**	**NSYPLAZT12123R**
1250	1250	420	2	**NSYPLAZT12124**	**NSYPLAZT12124R**
1500	500	320	1	**NSYPLAZT1553**	**NSYPLAZT1553R**
1500	500	420	1	**NSYPLAZT1554**	**NSYPLAZT1554R**
1500	750	320	1	**NSYPLAZT1573**	**NSYPLAZT1573R**
1500	750	420	1	**NSYPLAZT1574**	**NSYPLAZT1574R**
1500	1000	320	2	**NSYPLAZT15103**	**NSYPLAZT15103R**
1500	1000	420	2	**NSYPLAZT15104**	**NSYPLAZT15104R**
1500	1250	320	2	**NSYPLAZT15123**	**NSYPLAZT15123R**
1500	1250	420	2	**NSYPLAZT15124**	**NSYPLAZT15124R**

Polyester floor-standing enclosures
Dimensions

Sealed enclosure

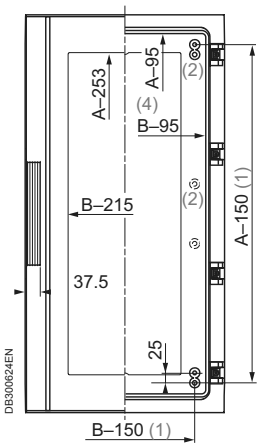

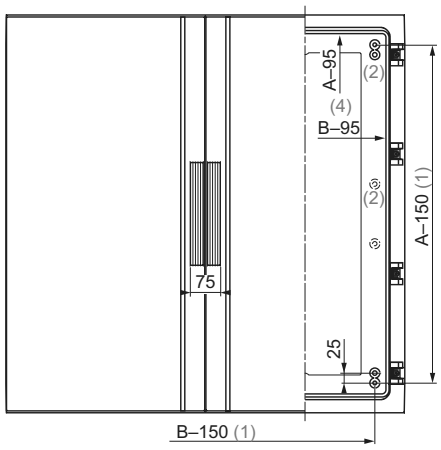

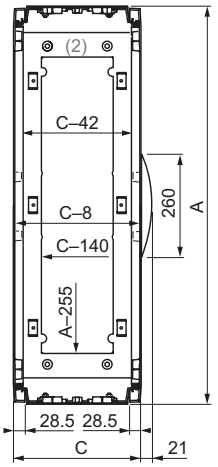

Enclosure with ventilated canopy

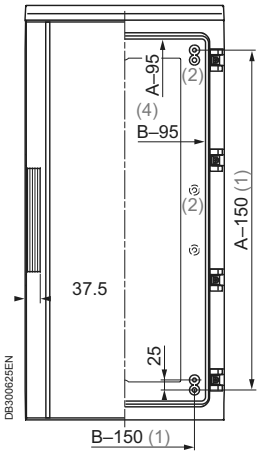

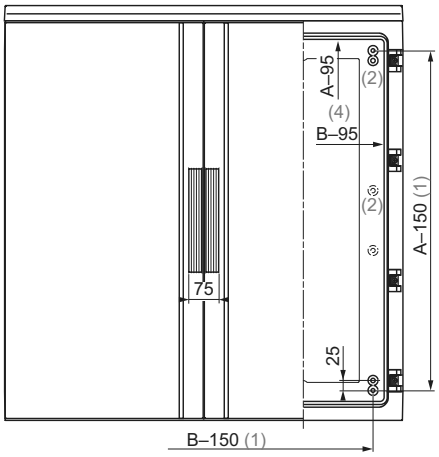

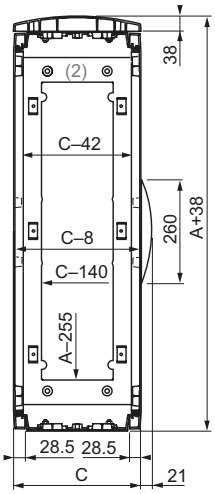

Common top views

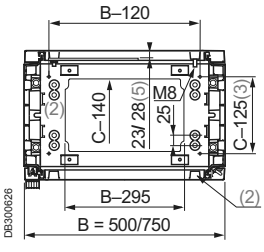

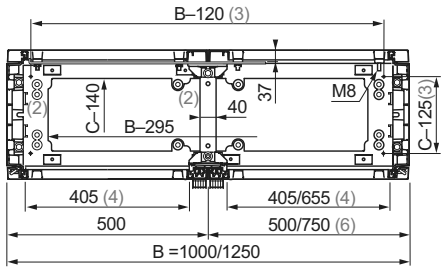

Polyester floor-standing enclosures
Dimensions

Enclosure with plinth-type open bottom part

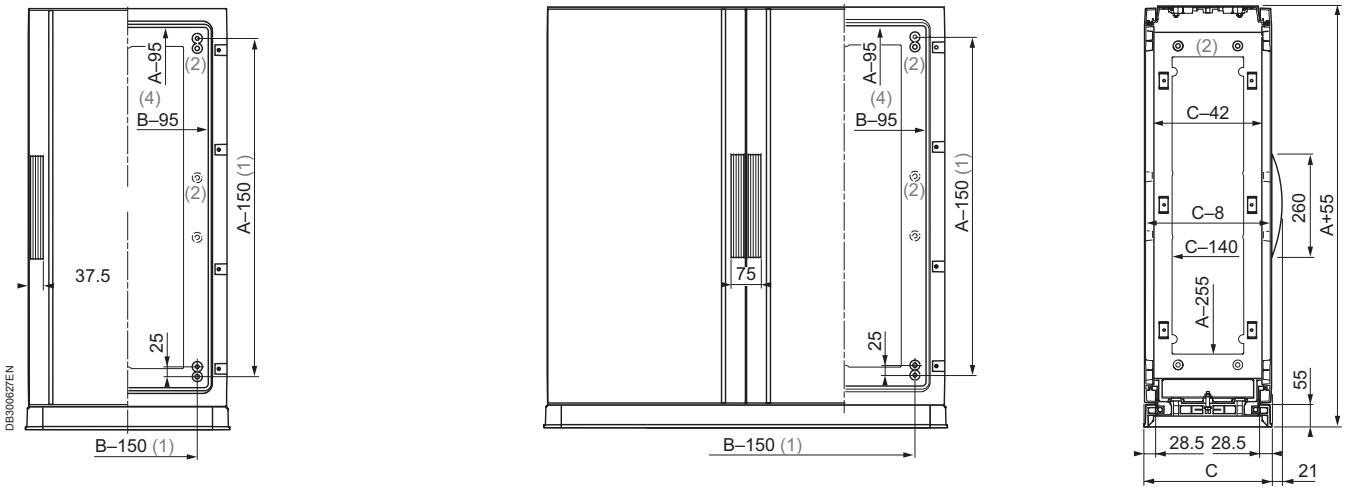

Enclosure with ventilated canopy and plinth-type open bottom part

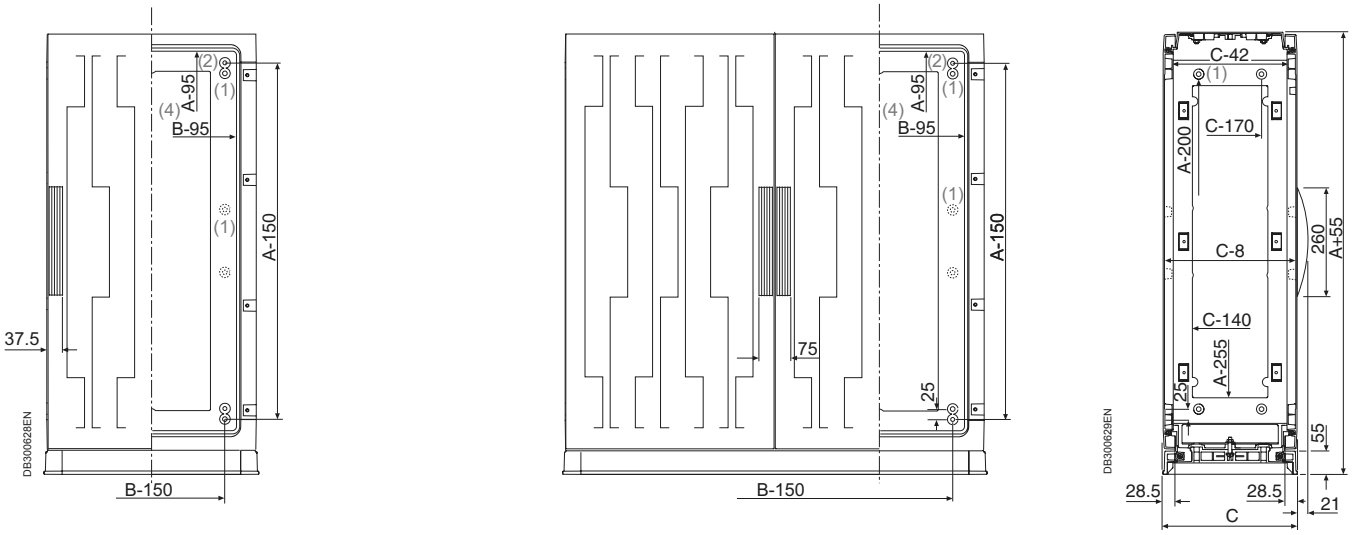

Common top views

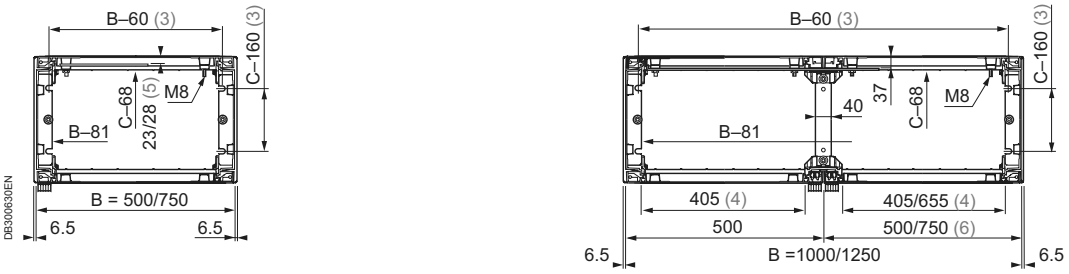

(1) 4 bosses with M8 inserts and studs for direct fixing of mounting plates.
(2) Bosses designed to accommodate M8 inserts, ref. **NSYTEX8**. They are placed:
– On the back of the enclosure, from the height of 1000 mm. They allow the fixing of partial mounting plates and assorted equipment.
– On the top and bottom parts of the enclosure. They are used for fixing the step slides, an internal door, 19" chassis, etc.
(3) Dimensions for fixing on the floor or on a plinth.
(4) Entry dimensions, door open.
(5) Dimension of 28 mm for enclosures with heights of more than 1000 mm (height after the installation of the plain mounting plates with reinforcement foldings).
(6) With a width of 1250 mm in standard supply, 500-mm door on the left and 750-mm door on the right.

Polyester floor-standing enclosures
Accessory selection guide

Mounting accessories


PB500072

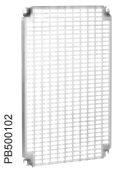
PB500102


PB500151

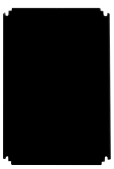
PB500103


PB500174


PR500175

Enclosure dimensions (mm)									
Height	Width	N° of doors	Metallic mounting plates		Insulating mounting plates		Modular distribution chassis		Internal door
			Plain	Telequick	Polyester	Bakelite			
			Page 64	Page 65	Page 64		Page 71		Page 60
500	500	1	**NSYPMM55**	**NSYPMR55**	**NSYPMA55**	**NSYPMB55**	-	-	**NSYPAPLA55**
500	750	1	**NSYPMM75**	**NSYPMR57**	**NSYPMA75**	**NSYPMB75**	-	-	**NSYPAPLA57**
500	1000	2	**NSYPMM510**	2 × **NSYPMR55**	**NSYPMA510**	**NSYPMB510**	-	-	2 × **NSYPAPLA55**
500	1250	2	**NSYPMM55** + **NSYPMM75**	**NSYPMR55** + **NSYPMR57**	**NSYPMA55** + **NSYPMA75**	**NSYPMB55** + **NSYPMB75**	-	-	**NSYPAPLA55** + **NSYPAPLA57**
750	500	1	**NSYPMM75**	**NSYPMR75**	**NSYPMA75**	**NSYPMB75**	**NSYDLP76**	**NSYDLP57**	**NSYPAPLA75**
750	750	1	**NSYPMM77**	**NSYPMR77**	**NSYPMA77**	**NSYPMB77**	**NSYDLP132**	**NSYDLP99**	**NSYPAPLA77**
750	1000	2	**NSYPMM710**	2 × **NSYPMR75**	**NSYPMA710**	**NSYPMB710**	2 × **NSYDLP76**	2 × **NSYDLP57**	2 × **NSYPAPLA75**
750	1250	2	**NSYPMM712**	**NSYPMR75** + **NSYPMR77**	**NSYPMA712**	**NSYPMB712**	**NSYDLP76** + **NSYDLP132**	**NSYDLP57** + **NSYDLP99**	**NSYPAPLA75** + **NSYPAPLA77**
1000	500	1	**NSYPMM105**	**NSYPMR105**	**NSYPMA105**	**NSYPMB105**	**NSYDLP114**	**NSYDLP95**	**NSYPAPLA105**
1000	750	1	**NSYPMM107**	**NSYPMR107**	**NSYPMA107**	**NSYPMB107**	**NSYDLP198**	**NSYDLP165**	**NSYPAPLA107**
1000	1000	2	**NSYPMM1010**	2 × **NSYPMR105**	**NSYPMA1010**	**NSYPMB1010**	2 × **NSYDLP114**	2 × **NSYDLP95**	2 × **NSYPAPLA105**
1000	1250	2	**NSYPMM1012**	**NSYPMR105** + **NSYPMR107**	**NSYPMA1012**	**NSYPMB1012**	**NSYDLP114** + **NSYDLP198**	**NSYDLP95** + **NSYDLP165**	**NSYPAPLA105** + **NSYPAPLA107**
1250	500	1	**NSYPMM125**	**NSYPMR125**	**NSYPMA125**	**NSYPMB125**	**NSYDLP133**	**NSYDLP114P**	**NSYPAPLA125**
1250	750	1	**NSYPMM127**	**NSYPMR127**	**NSYPMA127**	**NSYPMB127**	**NSYDLP231**	**NSYDLP198P**	**NSYPAPLA127**
1250	1000	2	**NSYPMM1210**	2 × **NSYPMR125**	**NSYPMA1210**	**NSYPMB1210**	2 × **NSYDLP133**	2 × **NSYPLD114P**	2 × **NSYPAPLA125**
1250	1250	2	**NSYPMM1212**	**NSYPMR125** + **NSYPMR127**	**NSYPMA1212**	**NSYPMB1212**	**NSYDLP133** + **NSYDLP231**	**NSYDLP114P** + **NSYDLP198P**	**NSYPAPLA125** + **NSYPAPLA127**
1500	500	1	**NSYPMM155**	**NSYPMR155**	-	**NSYPMB155**	**NSYDLP171**	**NSYDLP152**	**NSYPAPLA155**
1500	750	1	**NSYPMM157**	**NSYPMR157**	-	**NSYPMB157**	**NSYDLP297**	**NSYDLP264**	**NSYPAPLA157**
1500	1000	2	**NSYPMM1510**	2 × **NSYPMR155**	-	**NSYPMB1510**	2 × **NSYDLP171**	2 × **NSYDLP152**	2 × **NSYPAPLA155**
1500	1250	2	**NSYPMM1512**	**NSYPMR155** + **NSYPMR157**	-	**NSYPMB1512**	**NSYDLP171** + **NSYDLP297**	**NSYDLP152** + **NSYDLP264**	**NSYPAPLA155** + **NSYPAPLA157**

VDI accessories


PB500184


PB500185

Enclosure dimensions (mm)		19" fixed chassis	Number of U	19" swing chassis	Number of U
Height	Width	Page 74		Page 74	
500	750	**NSYBRF8PLA**	8	**NSYBRP7PLA**	7
750	750	**NSYBRF12PLA** + **NSYSPLA75**	12	**NSYBRP11PLA** + **NSYSPLA75**	11
1000	750	**NSYBRF17PLA** + **NSYSPLA100**	17	**NSYBRP16PLA** + **NSYSPLA100**	16
1250	750	**NSYBRF21PLA** + **NSYSPLA125**	21	**NSYBRP20PLA** + **NSYSPLA125**	20
1500	750	**NSYBRF26PLA** + **NSYSPLA150**	26	**NSYBRP25PLA** + **NSYSPLA150**	25

Polyester floor-standing enclosures

Accessory selection guide

Main accessories


PB500180

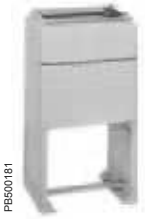
PB500181

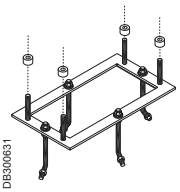
DB300631


PB500182


PB500183

Enclosure dimensions (mm)		N plinth	H plinth	Floor-fixing frame	Canopy	Cable-entry plate
		Height 60 mm	Height 900 mm			
Width	Depth	Page 54		Page 55	Page 58	Page 59
500	320	**NSYZNPLA53**	**NSYZHPLA53**	**NSYMFPLAZ53**	**NSYTJPLA53**	**NSYECPLAZ53**
500	420	**NSYZNPLA54**	**NSYZHPLA54**	**NSYMFPLAZ54**	**NSYTJPLA54**	**NSYECPLAZ54**
750	320	**NSYZNPLA73**	**NSYZHPLA73**	**NSYMFPLAZ73**	**NSYTJPLA73**	**NSYECPLAZ73**
750	420	**NSYZNPLA74**	**NSYZHPLA74**	**NSYMFPLAZ74**	**NSYTJPLA74**	**NSYECPLAZ74**
1000	320	**NSYZNPLA103**	**NSYZHPLA103**	**NSYMFPLAZ103**	**NSYTJPLA103**	**NSYECPLAZ103**
1000	420	**NSYZNPLA104**	**NSYZHPLA104**	**NSYMFPLAZ104**	**NSYTJPLA104**	**NSYECPLAZ104**
1250	320	**NSYZNPLA123**	**NSYZHPLA123**	**NSYMFPLAZ123**	**NSYTJPLA123**	**NSYECPLAZ123**
1250	420	**NSYZNPLA124**	**NSYZHPLA124**	**NSYMFPLAZ124**	**NSYTJPLA124**	**NSYECPLAZ124**

Step slides


PB500176

Page 66

Uprights and mounting rails


PB500177

Page 68

Door retainer

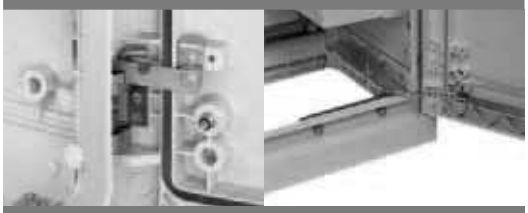
PB500178 PB500179

Page 60

Door switch


PB500186

Page 61

Insert


PB500187

Page 68

Document pocket


PB500188

VDI accessories and fixings


PB500189


PB500190

Coupling Kit

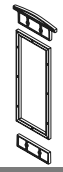
DB300632

Page 52

Anti-graffiti paint


PB500191

Page 70

Handles and inserts


PB500192


PB500193

Page 62

Wall-fixing lug


PB500194

Page 58

Composition accessories
Coupling accessories

Horizontal coupling kits

- For coupling 2 enclosures side by side.
- Coupling frame kit: made up of a coupling kit and the fixings required for installation.
- IP 55 at the coupling point.
- Trim kit: made up of 2 frames for aesthetic fitting of the 2 coupled enclosures.

For enclosure	References of coupling frame kit for enclosure (mm)	
Height (mm)	Depth 320	Depth 420
500	**NSYMUPLA53**	**NSYMUPLA54**
750	**NSYMUPLA73**	**NSYMUPLA74**
1000	**NSYMUPLA103**	**NSYMUPLA104**
1250	**NSYMUPLA123**	**NSYMUPLA124**
1500	**NSYMUPLA153**	**NSYMUPLA154**

For enclosure	References of trim kit for enclosure (mm)	
	Depth 320	Depth 420
Without canopy	**NSYSUPLA3**	**NSYSUPLA4**
With canopy	**NSYSUPLA3T**	**NSYSUPLA4T**

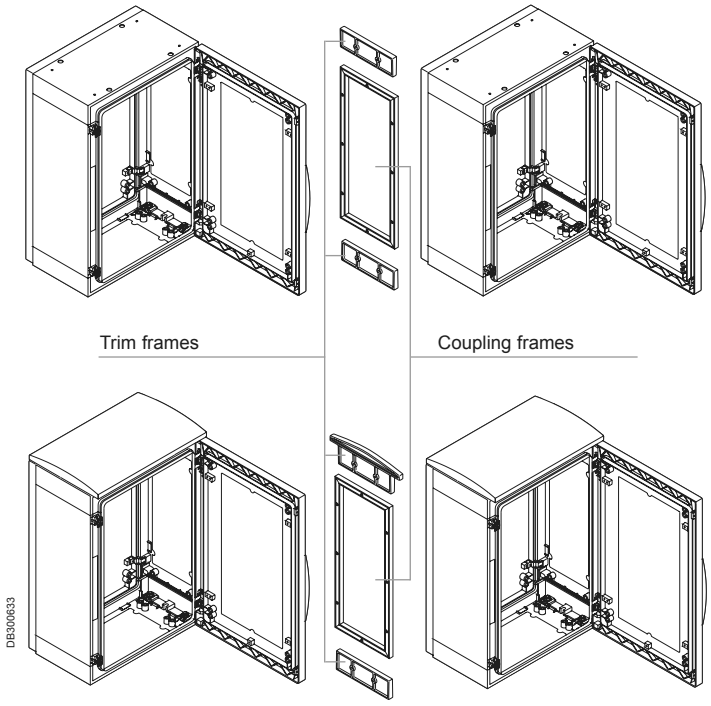

Composition accessories
Coupling accessories

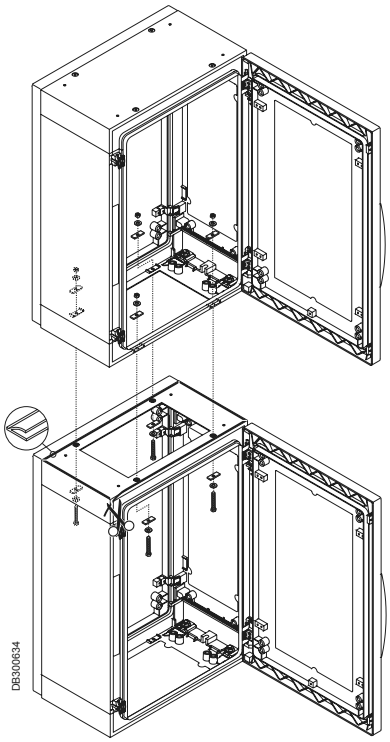

Vertical coupling kit

- For coupling 2 enclosures on top of one another.
- Kit made up of 3.5 m of adhesive seal and the fixings required for mounting.
- IP 55 at the coupling point.

Description	Reference
Vertical coupling kit	**NSYUVPLA**

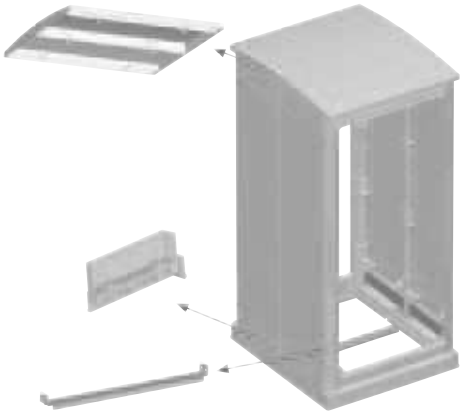

Specific

Configured

Enhanced depth enclosure

- After industrial machining, the frames of the standard enclosures are coupled in the factory to obtain enhaced depth floor-standing enclosures.
- 3 possible depths: 575, 675 and 775 mm.
- The internal volume of the standard enclosures remains unaffected.
- Possible for the 4 enclosure versions, in particular for 19" applications with widths of 750 and 1250 mm.
- IP 44 in the version with ventilated canopy, IP 54 for the other versions.
- Roof made from polyester reinforced with fibreglass, for dimensions: 750 × 575 mm, 750 × 775 mm, 1250 × 575 mm and 1250 × 775 mm.
- A rear door can be installed in the coupled enclosures. Option of installing 2 sets of step slides (at the front and at the rear).
- Supply or installation in the enclosures of a 19" chassis with side trim plate installed on the step slides:
  – 19 U, height 1000 mm
  – 23 U, height 1250 mm
  – 25 U, height 1500 mm
- Configured offer for PLA and PLAZ versions with depth 575 and 775 mm.

Composition accessories
Base accessories


PB500180

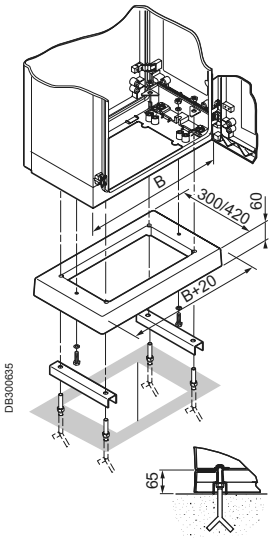

N Plinth height 60 mm

- Designed to be installed under the closed-bottom enclosures (version PLA or PLAT).
- Polyester reinforced with fibreglass, moulded by hot compression, RAL 7032 grey.

For floor-standing enclosure (mm)		Reference
Width (B)	Depth	
500	320	**NSYZNPLA53**
750	320	**NSYZNPLA73**
1000	320	**NSYZNPLA103**
1250	320	**NSYZNPLA123**
500	420	**NSYZNPLA54**
750	420	**NSYZNPLA74**
1000	420	**NSYZNPLA104**
1250	420	**NSYZNPLA124**

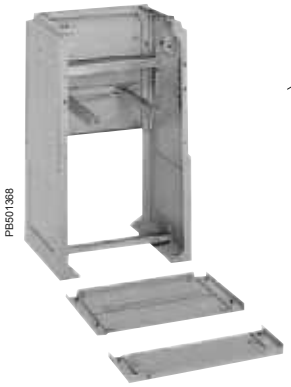
PB501368


PB500181

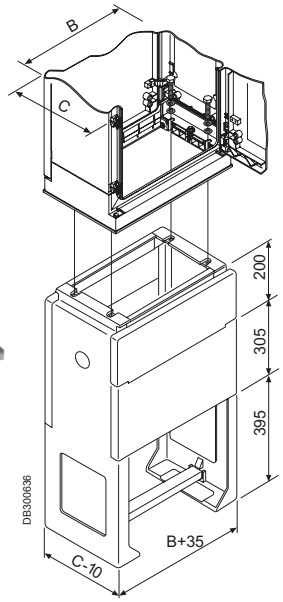

Buriable H Plinth height 900 mm

- Designed to be installed under the open-bottom enclosures (version PLAZ or PLAZT).
- Polyester reinforced with fibreglass, moulded by hot compression, RAL 7032 grey.
- Front panel with a height of 170 mm, retractable, providing easy access to the inside.
- Fixed front panel with a height of 305 mm, corresponding to the finished floor height area.
- The height above the floor after building-in varies between 200 and 500 mm.
- A metal rail helps to fix the entry cables.
- Lateral uprights with pre-knock-out auxiliary output with ∅ Pg 36 (48 mm).
- A pre-knock-out area is provided at the bottom of the lateral uprights for cable entry, if necessary.
- Delivered with the fixings required for installation.

For floor-standing enclosure (mm)		Reference
Width (B)	Depth (C)	
500	320	**NSYZHPLA53**
750	320	**NSYZHPLA73**
1000	320	**NSYZHPLA103**
1250	320	**NSYZHPLA123**
500	420	**NSYZHPLA54**
750	420	**NSYZHPLA74**
1000	420	**NSYZHPLA104**
1250	420	**NSYZHPLA124**

Specific

Optional removable top front plate, with two double-bar locks.

Composition accessories
Base accessories

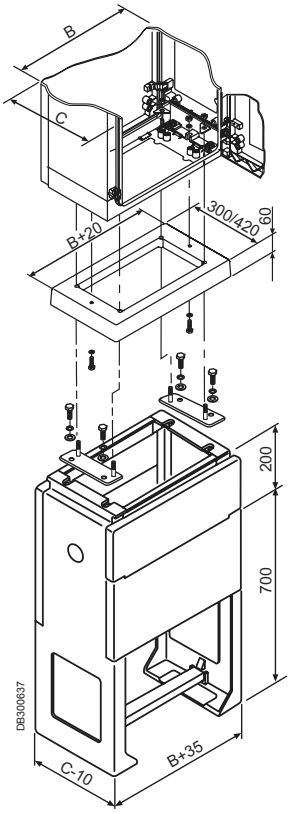

Connectors between plinths

- Designed to allow the adaptation of a closed-bottom enclosure + N plinth on a H-type partially buried plinth.
- Composition: 2 parts for adapting the centre-to-centre distances.

For floor-standing enclosure (mm)	Description	Reference
Depth		
320	Linking parts for N plinth on 320-mm H plinth	**NSYAZ3PLA**
420	Linking parts for N plinth on 420-mm H plinth	**NSYAZ4PLA**

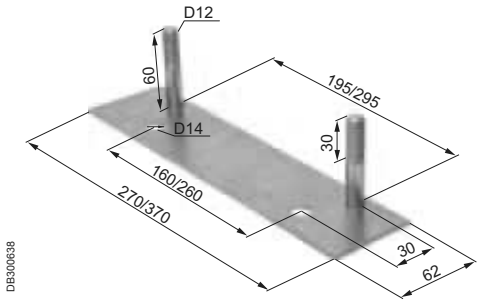

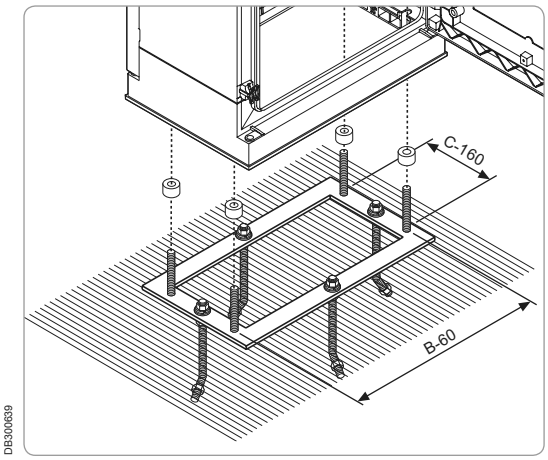

Floor-standing frame

- Frame for direct fixing on the floor for installing open-bottom enclosures (version PLAZ or PLAZT).
- Material: passivated zinc-coated steel.

For floor-standing enclosure (mm)		Reference
Width (B)	Depth (C)	
500	320	**NSYMFPLAZ53**
750	320	**NSYMFPLAZ73**
1000	320	**NSYMFPLAZ103**
1250	320	**NSYMFPLAZ123**
500	420	**NSYMFPLAZ54**
750	420	**NSYMFPLAZ74**
1000	420	**NSYMFPLAZ104**
1250	420	**NSYMFPLAZ124**

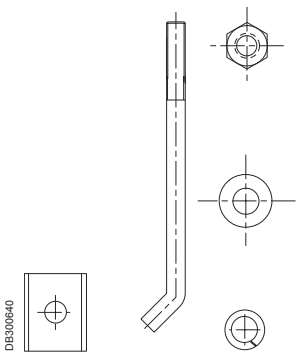

Floor-fixing studs

Set of four threaded parts and fixings, for fixing the enclosures on concrete plinths.

Description	Reference
Fixing studs	**NSYFSPLAZ**

Composition accessories
Base accessories


PB501738


PB501739

ZA plinths for PLA enclosure (version PLA and PLAT)

Designed to support and raise the closed-bottom versions of PLA enclosures, in other words, references **NSYPLAxx** or **NSYPLATxx**:
- Polyester material reinforced with fibreglass, moulded by hot compression.
- Guarantees total insulation according to IEC 61439-1.
- Ensures a degree of protection of IP 44 and impact resistance of IK 10.
- Plinth height of 200 mm; stackable to obtain a 400-mm plinth.
- Four floor-attachment points; the symmetry of the parts prevents incorrect assembly.

The frontal parts of the plinth (front and rear) have two stainless-steel screws protected by a plastic cap; these screws, which can be accessed from the outside, make it possible (using an Allen key) to open and remove the frontal parts for easier cable installation.
In stacked position, the bottom plinth can be partially buried.
It is provided with one or two reinforcement cross-rails, adjustable to adapt to the position of the cables.
The reference of the plinth contains all the accessories required for attaching the enclosure to the plinth and for stacking two plinths.

For floor-standing enclosure				Plinth				Cable-gland area	
Height	Width	Depth	Reference	Height	Width	Depth	Reference	Width	Depth
500 to 1500	500	320	**NSYPLA(T)x53**	200	494	250	**NSYZA253**	360	205
500 to 1500	750	320	**NSYPLA(T)x73**	200	744	250	**NSYZA273**	610	205
500 to 1500	1000	320	**NSYPLA(T)x103**	200	994	250	**NSYZA2103**	860	205
500 to 1500	1250	320	**NSYPLA(T)x123**	200	1244	250	**NSYZA2123**	1100	205
500 to 1500	500	420	**NSYPLA(T)x54**	200	494	350	**NSYZA254**	360	305
500 to 1500	750	420	**NSYPLA(T)x74**	200	744	350	**NSYZA274**	610	305
500 to 1500	1000	420	**NSYPLA(T)x104**	200	994	350	**NSYZA2104**	860	305
500 to 1500	1250	420	**NSYPLA(T)x124**	200	1244	350	**NSYZA2124**	1110	305


PB501740

Cable supporting cross-rail

The lateral sides of the plinth are provided with bosses for attaching cross-rails with cut-out profiles, for supporting cables.
The reference of the cross-rail includes all the elements required for assembly.

For plinth		Cross-rail
NSYZA253	NSYZA254	**NSYAC320**
NSYZA273	NSYZA274	**NSYAC560**
NSYZA2103	NSYZA2104	**NSYAC840**
NSYZA2123	NSYZA2124	**NSYAC1080**

Kit for IP 54

Makes it possible to obtain IP 54 for the plinth and the plinth-enclosure connection Ref. **NSYAEPZA**.

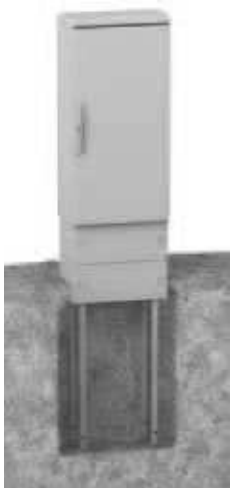
PB501741

Feet for partially buried installation

Allows the partially buried installation of plinths before completion of the floor.
The plinths are attached by four feet with a standard length of 750 mm.
Possibility of horizontal adjustment of the plinth.
The kit is made up of four feet and fixings, ref. **NSYAEBFZ**.

Composition accessories
Base accessories


PB501742


PB501743

ZZ plinths for PLA enclosure (version PLAZ and PLAZT)

Designed to support and raise the open-bottom versions of PLA enclosures, in other words, references **NSYPLAZ** or **NSYPLAZT**:
- Polyester material reinforced with fibreglass, moulded by hot compression.
- Guarantees total insulation according to IEC 61439-1.
- Ensures a degree of protection of IP 44 and impact resistance of IK 10.

The offer consists of two plinths, with heights of 200 mm and 500 mm.
Four floor-attachment points; the symmetry of the parts prevents incorrect assembly.
The frontal parts (front and rear) are removed from the inside. Removing them makes it easier to install the cables.
The 500-mm plinth can be partially buried.
It is provided with one or two reinforcement cross-rails, adjustable to adapt to the position of the cables.

The reference of the plinth contains all the accessories required for attaching the enclosure to the plinth.

For floor-standing enclosure				Plinth				Cable-gland area	
Height	Width	Depth	Reference	Height	Width	Depth	Reference	Width	Depth
500 to 1500	500	320	**NSYPLAZ(T)x53**	200	535	310	**NSYZZ253**	419	252
500 to 1500	750	320	**NSYPLAZ(T)x73**	200	785	310	**NSYZZ273**	669	252
500 to 1500	1000	320	**NSYPLAZ(T)x103**	200	1035	310	**NSYZZ2103**	919	252
500 to 1500	1250	320	**NSYPLAZ(T)x123**	200	1285	310	**NSYZZ2123**	1169	252
500 to 1500	500	420	**NSYPLAZ(T)x54**	200	535	410	**NSYZZ254**	419	352
500 to 1500	750	420	**NSYPLAZ(T)x74**	200	785	410	**NSYZZ274**	669	352
500 to 1500	1000	420	**NSYPLAZ(T)x104**	200	1035	410	**NSYZZ2104**	919	352
500 to 1500	1250	420	**NSYPLAZ(T)x124**	200	1285	410	**NSYZZ2124**	1169	352
500 to 1500	500	320	**NSYPLAZ(T)x53**	500	535	310	**NSYZZ553**	419	252
500 to 1500	750	320	**NSYPLAZ(T)x73**	500	785	310	**NSYZZ573**	669	252
500 to 1500	1000	320	**NSYPLAZ(T)x103**	500	1035	310	**NSYZZ5103**	919	252
500 to 1500	1250	320	**NSYPLAZ(T)x123**	500	1285	310	**NSYZZ5123**	1169	252
500 to 1500	500	420	**NSYPLAZ(T)x54**	500	535	410	**NSYZZ554**	419	352
500 to 1500	750	420	**NSYPLAZ(T)x74**	500	785	410	**NSYZZ574**	669	352
500 to 1500	1000	420	**NSYPLAZ(T)x104**	500	1035	410	**NSYZZ5104**	919	352
500 to 1500	1250	420	**NSYPLAZ(T)x124**	500	1285	410	**NSYZZ5124**	1169	352


PB501744

Cable supporting cross-rail

The lateral sides of the plinths are provided with bosses for attaching cross-rails with cut-out profiles, for supporting cables.
The reference of the cross-rail includes all the elements required for assembly.

For plinth				Cross-rail
NSYZZ253	NSYZZ254	NSYZZ553	NSYZZ554	**NSYAC360**
NSYZZ273	NSYZZ274	NSYZZ573	NSYZZ574	**NSYAC600**
NSYZZ2103	NSYZZ2104	NSYZZ5103	NSYZZ5104	**NSYAC840**
NSYZZ2123	NSYZZ2124	NSYZZ5123	NSYZZ5124	**NSYAC1120**


PB501737

Outside opening kit

The 200-mm front part of the 200- and 500-mm plinths can be opened from the outside, after installing a kit made up of two locks with double-bar insert, ref. **NSYAELZ**.

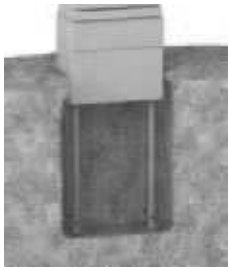
PB501745

Feet for partially buried installation

Allows the partially buried installation of plinths before completion of the floor. The plinths are attached by four feet with a standard length of 750 mm.
Possibility of horizontal adjustment of the plinth.
The reference includes a kit made up of four feet and fixings, ref. **NSYAEBFZ**.

Composition accessories

Top-mounting accessories
Fixing accessories



PB501369

Canopy

- Polyester material reinforced with fibreglass, moulded by hot compression, self-extinguishing, RAL 7032 grey.
- It can be installed in all enclosure models.
- High resistance to impacts, temperature and bad weather.
- Delivered with the fixings required for installation.
- Increases the height (A) of the enclosure by 38 mm, without modifying its width or depth.
- Essential for outdoor use.

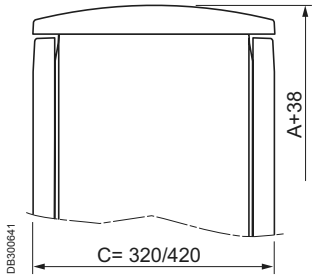

DB300641

For enclosure (mm)		Reference
Width	Depth (C)	
500	320	**NSYTJPLA53**
750	320	**NSYTJPLA73**
1000	320	**NSYTJPLA103**
1250	320	**NSYTJPLA123**
500	420	**NSYTJPLA54**
750	420	**NSYTJPLA74**
1000	420	**NSYTJPLA104**
1250	420	**NSYTJPLA124**



PB501055

Grille for IP 54 instead of IP 44

- For enclosure versions PLAT and PLAZT.
- It is installed from the inside in the upper ventilation opening.
- Delivered with G2 M1 standard synthetic filter, see **ClimaSys** section.
- 1 grille for 500 and 750 mm wide enclosures, 2 grilles for 1000 and 1250 mm wide enclosures.
- Prevents the entry of dust and provides the enclosure with IP 5X protection at the top.
- Maintains the possibility of ventilation.

Description	Reference
Outlet grille	**NSYCAG125LPF**



PB500194

Wall-fixing lugs

- Fixing on the sides by 4 or 6 lugs in horizontal position (6 lugs for enclosures with height ≥ 1000 mm).
- Drilling positions and marks inside the side panels.
- Passivated zinc-coated material.
- Maximum acceptable load: 180 kg.
- Set of 6 lugs and fixings.
- 10 mm fixing plane on the rear of the enclosure plane.

Description	Reference
Wall-fixing lugs	**NSYFMPLA**

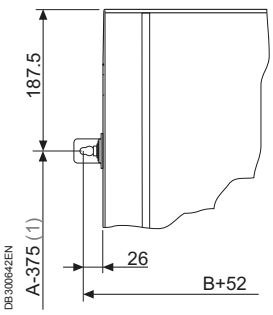

DB300642EN

(1) For enclosures with height ≥ 1000 mm, 1 extra lug at the centre of the A-375 side.

Specific

Available stainless-steel wall-fixing lugs.

Composition accessories
Cable-entry accessories

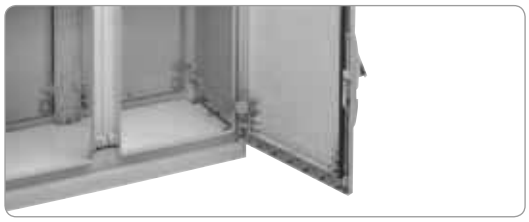
PB500183

Cable-entry plate

- Designed to be installed inside the enclosures with open bottom part (version PLAZ or PLAZT).
- Polyester material reinforced with fibreglass, thickness 4 mm.
- Easy drilling in specific customised version.
- Delivered with the fixings required for installation.
- Incompatibility with: adapter plates, step slides, internal door and chassis for modular distribution.

For enclosure (mm)		Reference
Width (B)	Depth (C)	
500	320	**NSYECPLAZ53**
750	320	**NSYECPLAZ73**
1000	320	**NSYECPLAZ103**
1250	320	**NSYECPLAZ123**
500	420	**NSYECPLAZ54**
750	420	**NSYECPLAZ74**
1000	420	**NSYECPLAZ104**
1250	420	**NSYECPLAZ124**

Cable-entry plate (1-door enclosure)

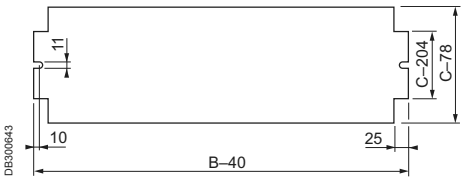

Cable-entry plate (2-door enclosure)

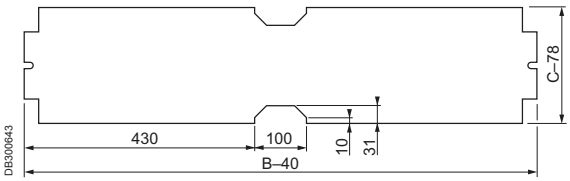

Composition accessories
Door and door accessories





Internal door

- Aluminium door, RAL 7032 grey.
- Designed for direct installation in enclosures with sealed bottom part. In the enclosures with the bottom part open, installation can be performed by ordering the necessary adapter plates, ref. **NSYPTZ●●●**.
- 2 depthwise mounting positions (1) according to the chosen M8 impressions, on the top and bottom parts of the enclosure, for fixing.
- Lock with 5-mm double-bar inserts.
- Delivered with M8 brass inserts and fixings.
- Incompatibility with: modular distribution chassis, 19" chassis, cable-entry plate and door retainer, ref. **NSYRETPLAU**.

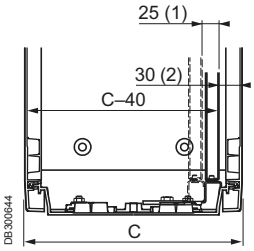

(1) Two positions for depthwise installation.
(2) The 2nd position moves the position of the internal door back by 25 mm.

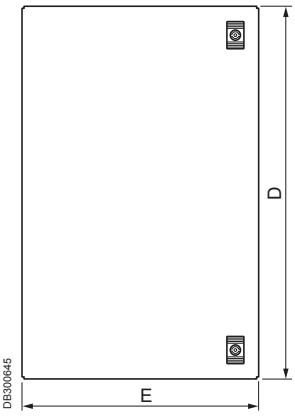

For enclosure (mm)		Reference	Internal door dimensions		Weight (kg)
Height	Width		D	E	
500	500	**NSYPAPLA55**	398	398	1.6
500	750	**NSYPAPLA57**	398	648	2.2
500	1000	2 × **NSYPAPLA55**	398	796 (2 × 398)	3.2 (2 × 1.6)
500	1250	**NSYPAPLA55** + **NSYPAPLA57**	398	1046 (398 + 648)	3.8 (1.6 + 2.2)
750	500	**NSYPAPLA75**	648	398	2.2
750	750	**NSYPAPLA77**	648	648	3.1
750	1000	2 × **NSYPAPLA75**	648	796 (2 × 398)	4.4 (2 × 2.2)
750	1250	**NSYPAPLA75** + **NSYPAPLA77**	648	1046 (398 + 648)	5.3 (2.2 + 3.1)
1000	500	**NSYPAPLA105**	898	398	2.8
1000	750	**NSYPAPLA107**	898	648	4.1
1000	1000	2 × **NSYPAPLA105**	898	796 (2 × 398)	5.4 (2 × 2.8)
1000	1250	**NSYPAPLA105** + **NSYPAPLA107**	898	1046 (398 + 648)	6.9 (2.8 + 4.1)
1250	500	**NSYPAPLA125**	1148	398	3.4
1250	750	**NSYPAPLA127**	1148	648	5
1250	1000	2 × **NSYPAPLA125**	1148	796 (2 × 398)	6.8 (2 × 3.4)
1250	1250	**NSYPAPLA125** + **NSYPAPLA127**	1148	1046 (398 + 648)	8.4 (3.4 + 5)
1500	500	**NSYPAPLA155**	1398	398	4
1500	750	**NSYPAPLA157**	1398	648	6
1500	1000	2 × **NSYPAPLA155**	1398	796 (2 × 398)	8 (2 × 4)
1500	1250	**NSYPAPLA155** + **NSYPAPLA157**	1398	1046 (398 + 648)	10 (4 + 6)



NSYRETPLA



NSYRETPLAU

Door retainer

- Designed to adapt directly to the enclosure.
- 2 models available according to the type of enclosure:
– 1 model opening to 110° for enclosure versions PLA, PLAZ and PLAT.
– 1 model with 2 positions, 90° and 120°, for all the versions (warning: this solution is incompatible with certain accessories), see below.
- Can be installed on a door opening to the left or right indistinctly.
- Material: galvanised steel.
- Delivered with the fixings required for installation.

For enclosure	Reference
Version PLA, PLAZ, PLAT	**NSYRETPLA**
For all versions	**NSYRETPLAU**

Note: Ref. **NSYRETPLAU** is incompatible with internal doors, modular distribution chassis, step slides, adapter plates and cable-entry plates. In the event of incompatibility, use ref. **NSYRETPLAZ**.

Composition accessories
Door and door accessories


PB500186

Door switch

- Supply: switch, fixing bracket and fixings.
- NC + NO switch.
- Incompatible with the rear door and modular distribution chassis.

Description	Reference
Door switch	**NSYSNLPLA**


PB501371

Protection and support screen

- Protective screen made from transparent polycarbonate, protecting access to the switchgear of small enclosures.
- The screen is fixed using accessory, ref. **NSYSPTR77**, to be ordered separately.
- The screens and fixing accessories are to be ordered in multiples of 5.

For enclosure (mm)		Reference
Width (A)	Height (C)	
500	500	**NSYPPTR55**
750	500	**NSYPPTR57**
500	750	**NSYPPTR75**
750	750	**NSYPPTR77**

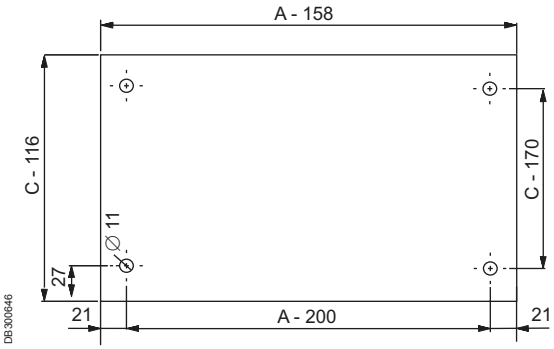

DE300646

Composition accessories
Locking system

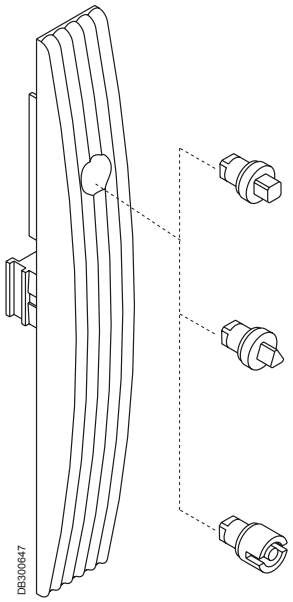

Locks with escutcheon and without handle

- Standard supply for the enclosures with sealed top and bottom parts (PLA version).
- With 5 mm double-bar insert.
- PA6 material charged with fibreglass.
- RAL 7032 grey.
- Fire resistance: 650 °C.
- Resistance to external mechanical impacts: IK 10.
- Insert breakage torque: 15 daN.

Options of changing the form inserts (supplied with the required operating key)

Description	Reference
7 mm square insert	**NSYTC7CRN**
8 mm square insert	**NSYTC8CRN**
6.5 mm triangular insert	**NSYTT6CRN**
8 mm triangular insert	**NSYTT8CRN**
5 mm double-bar insert	**NSYTDB5PLA**



NSYBCPLA

Padlocking device

- Padlocking accessory, preventing access to the lock-control insert. Opening diameter: 14 mm.

Description	Reference
Padlocking device	**NSYBCPLA**

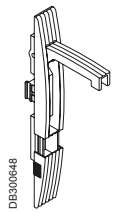

NSYEBMPLA

Options of changing for a handle lock

- Option of changing the escutcheon and the insert for a handle lock, ref. **NSYEBMPLA**, delivered without barrel or insert block.
- The insert or barrel are to be chosen from the option table on the next page.

Composition accessories
Locking system

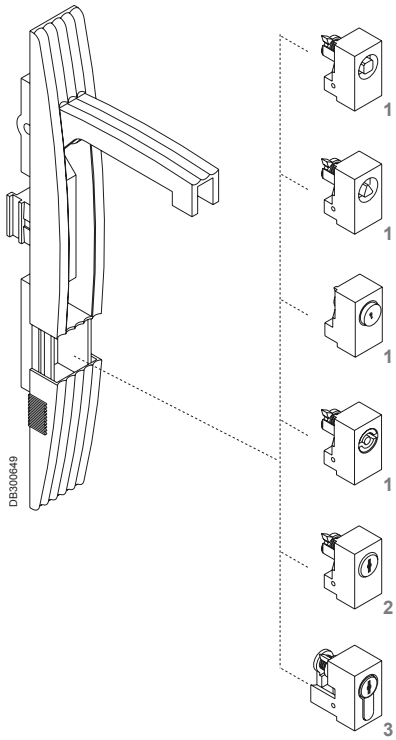

1 Block with form insert.
2 Block with cylindrical barrel.
3 Block with semi-cylindrical barrel.

Lock with handle

- Ergonomic locking system with pivoting handle installed as standard on enclosures with ventilated canopy and/or open bottom part (versions PLAT, PLAZ and PLAZT), with a 5 mm double-bar insert block.
- Material: PA6 charged with 30% fibreglass.
- RAL 7032 grey.
- Fire resistance: 650 °C.
- Resistance to external mechanical impacts: IK 10.

Options of changing the form-insert blocks (supplied with the required operating key)

Description	Reference
Block, 6 mm square insert	**NSYINS61**
Block, 7 mm square insert	**NSYINS71**
Block, 8 mm square insert	**NSYINS81**
Block, 6.5 mm triangular insert	**NSYINT61**
Block, 8 mm triangular insert	**NSYINT81**
Push-button	**NSYTSPLA**
Double bar	**NSYINDB51**

Options of changing for blocks with cylindrical barrels

Type of key	Reference
405 E key	**NSYIN405E1**
421 E key	**NSYIN421E1**
455 key	**NSYIN4551**
1242 E key	**NSYIN1242E1**
1332 E key	**NSYIN1332E1**
2131 A key	**NSYIN2131A1**
2132 A key	**NSYIN2132A1**
2331 A key	**NSYIN2331A1**
2433 A key	**NSYIN2433A1**

Type of key	Reference
2452 E key	**NSYIN2452E1**
3113 A key	**NSYIN3113A1**
3122 E key	**NSYIN3122E1**
3123 A key	**NSYIN3123A1**
3133 A key	**NSYIN3133A1**
3422 E key	**NSYIN3422E1**
3432 E key	**NSYIN3432E1**
EDF 1300 key	**NSYINF1301**
EDF 1400 key	**NSYINF1401**

Options of changing for blocks with semi-cylindrical barrels

Description	Reference
1242 E key	**NSYIN1242E2**
DIN adapter	**NSYINDIN2**
JIS key	**NSYINKJIS2**
Reinforced key	**NSYINKR2**
FAC key	**NSYINKFAC2**



NSYCBCMPLA



NSYEBPLA

Options of changing the handle

- Changing the handle for a handle including a padlocking device (∅ 10 mm) allowing the handle to be locked.
- Option of changing the handle lock for a lock with an escutcheon and without handle, delivered without insert. The insert is to be chosen from the option table on the previous page:

Description	Reference
Padlocking handle	**NSYCBCMPLA**
Escutcheon without handle, without insert	**NSYEBPLA**

Mounting accessories
Installation accessories


PB501374


PB501375

Metallic mounting plate and insulating mounting plate

Plain mounting plate

- Galvanised sheet-steel mounting plate.
- Direct installation on M8 inserts at the rear of the enclosure or on step slides for depth adjustment (see page **66**). The enclosures with height of ≥ 1000 mm have intermediate impressions for installing mounting plates of a lesser height (M8 inserts, ref. **NSYTEX8**, to be ordered separately).
- In the 2-door enclosures, it is possible to install 1 complete mounting plate or 2 individual mounting plates.
- Maximum acceptable load: 150 kg/m².
- Thickness: 2.5 mm.

Insulating mounting plate

- Bakelite mounting plate, RAL 9005 black.
- Polyester mounting plate, RAL 7035.
- Maximum acceptable load: 150 kg/m².
- Thickness: 4 mm for the 55 and 75 plates, 5 mm for the other plates.

For enclosure (mm)		Mounting plate references			Surf. (dm²)	H (mm)
Height (A)	Width (B)	Plain	Insulating			
			Bakelite	Polyester		
500	500	**NSYPMM55**	**NSYPMB55**	**NSYPMA55**	14	-
500	750	**NSYPMM75**	**NSYPMB75**	**NSYPMA75**	24	-
500	1000	**NSYPMM510**	**NSYPMB510**	**NSYPMA510**	32	437.5
500	1250	**NSYPMM55** + **NSYPMM75**	**NSYPMB55** + **NSYPMB75**	**NSYPMA55** + **NSYPMA75**	-	-
750	500	**NSYPMM75**	**NSYPMB75**	**NSYPMA75**	24	-
750	750	**NSYPMM77**	**NSYPMB77**	**NSYPMA77**	40	-
750	1000	**NSYPMM710**	**NSYPMB710**	**NSYPMA710**	54	437.5
750	1250	**NSYPMM712**	**NSYPMB712**	**NSYPMA712**	70	687.5
1000	500	**NSYPMM105**	**NSYPMB105**	**NSYPMA105**	33	-
1000	750	**NSYPMM107**	**NSYPMB107**	**NSYPMA107**	55	-
1000	1000	**NSYPMM1010**	**NSYPMB1010**	**NSYPMA1010**	74	437.5
1000	1250	**NSYPMM1012**	**NSYPMB1012**	**NSYPMA1012**	96	687.5
1250	500	**NSYPMM125**	**NSYPMB125**	**NSYPMA125**	42	-
1250	750	**NSYPMM127**	**NSYPMB127**	**NSYPMA127**	70	-
1250	1000	**NSYPMM1210**	**NSYPMB1210**	**NSYPMA1210**	96	437.5
1250	1250	**NSYPMM1212**	**NSYPMB1212**	**NSYPMA1212**	124	687.5
1500	500	**NSYPMM155**	**NSYPMB155**	**-**	51	-
1500	750	**NSYPMM157**	**NSYPMB157**	**-**	85	-
1500	1000	**NSYPMM1510**	**NSYPMB1510**	**-**	118	437.5
1500	1250	**NSYPMM1512**	**NSYPMB1512**	**-**	152	687.5

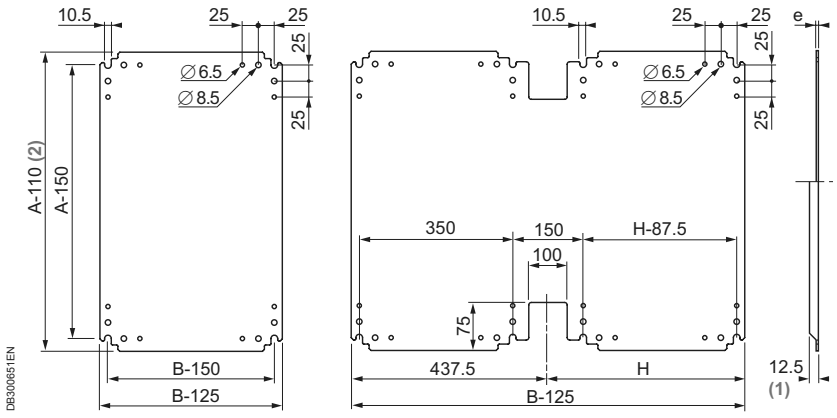

(1) Reinforcing fold for steel mounting plate with heights and widths ≥ 1000 mm.
(2) A-125 for references **NSYPMM1010** to **NSYPMM1512**, A-120 for the polyester mounting plate, ref. **NSYPMA●●●**.

Note: The diagrams above relate to the metal mounting plates. The mounting plates made from insulating material only have 4 or 8 main fixing points and the external dimensions of the diagrams.

Mounting accessories
Installation accessories

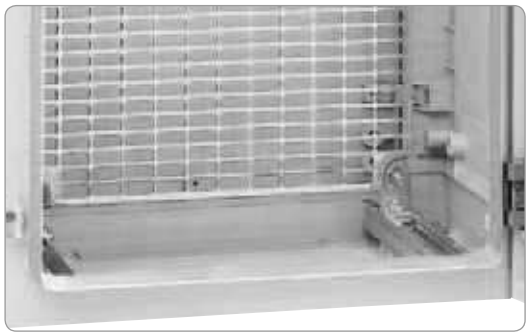
PB501376

Telequick mounting plate

- It allows any switchgear to be mounted on the same plane without drilling or tapping.
- Grille made from galvanised sheet steel, with 11 × 26 mm drill holes, with a step of 15 × 30 mm, for direct installation, with clip nuts, of all the devices with fixing at 2, 3 or 4 points, by screws with diameters of 3, 4, 5 or 6 mm.
- Direct installation on M8 inserts at the rear of the enclosure or on step slides for depth adjustment (see page **66**). The enclosures with height of ≥ 1000 mm have intermediate impressions for installing mounting plates of a lesser height (M8 inserts, ref. **NSYTEX8**, to be ordered separately).
- Maximum acceptable load: 150 kg/m².

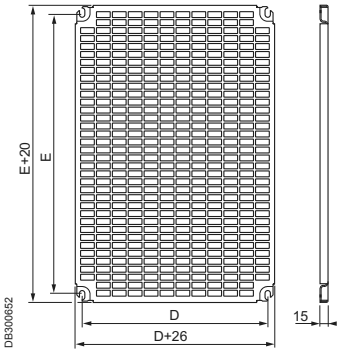

For enclosure (mm)		Reference	Dimensions (mm)		Surface (dm²)
Height	Width		E	D	
500	500	**NSYPMR55**	350	350	15.3
500	750	**NSYPMR57**	350	600	24.6
500	1000	2 × **NSYPMR55**	350	2 × 350	30.6 (2 × 15.3)
500	1250	**NSYPMR55** + **NSYPMR57**	350	350 600	39.9 (15.3 + 24.6)
750	500	**NSYPMR75**	600	350	25.5
750	750	**NSYPMR77**	600	600	51.1
750	1000	2 × **NSYPMR75**	600	2 × 350	51 (2 × 25.5)
750	1250	**NSYPMR75** + **NSYPMR77**	600	350 600	76.6 (25.5 + 51.1)
1000	500	**NSYPMR105**	850	350	35.7
1000	750	**NSYPMR107**	850	600	57.5
1000	1000	2 × **NSYPMR105**	850	2 × 350	71.4 (2 × 35.7)
1000	1250	**NSYPMR105** + **NSYPMR107**	850	350 600	93.2 (35.7 + 57.5)
1250	500	**NSYPMR125**	1100	350	45.9
1250	750	**NSYPMR127**	1100	600	74
1250	1000	2 × **NSYPMR125**	1100	2 × 350	91.8 (2 × 45.9)
1250	1250	**NSYPMR125** + **NSYPMR127**	1100	350 600	119.9 (45.9 + 74)
1500	500	**NSYPMR155**	1350	350	56.1
1500	750	**NSYPMR157**	1350	600	90.4
1500	1000	2 × **NSYPMR155**	1350	2 × 350	112.2 (2 × 56.1)
1500	1250	**NSYPMR155** + **NSYPMR157**	1350	350 600	146.5 (56.1 + 90.4)

Mounting accessories
Installation accessories


PB500176

Step slides

- Set of 4 step slides with brackets allowing continuous depth adjustment of the mounting plate, with a pitch of 25 mm.
- Designed for direct installation in the enclosures with sealed bottom part (versions PLA or PLAT).
- In the enclosures with open bottom part (versions PLAZ or PLAZT), installation is made possible by adding the relevant adapter plates (see tables below and description on the next page).
- Material: bracket with steel M8 stud on aluminium rail.
- Fixing on the top and bottom parts of the enclosure by means of M8 inserts and screws (supplied).
- Incompatibility with: internal door, modular distribution chassis, 19" chassis, cable-entry plate and door retainer, ref. **NSYRETPLAU**.

For enclosure		Reference	
Depth (mm)	N° of doors	Step slides	Adapter plates
320	1	**NSYDPLA3**	**NSYPTZ3**
420	1	**NSYDPLA4**	**NSYPTZ4**
320	2	2 × **NSYDPLA3**	**NSYPTZ32P**
420	2	2 × **NSYDPLA4**	**NSYPTZ42P**


PB501377

NSYDPLA

Installation of step slide ref. NSYDPLA●●●

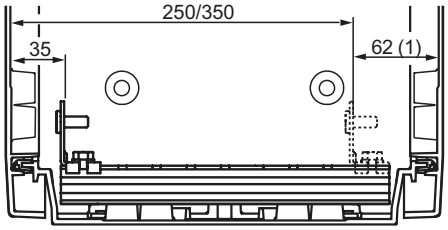

DB300653

(1) 57 mm with one transparent door.


PB501378

NSYDPLA and NSYPTZ

Installation of step slide ref. NSYDPLA●●●, with adapter plate ref. NSYPTZ●●●

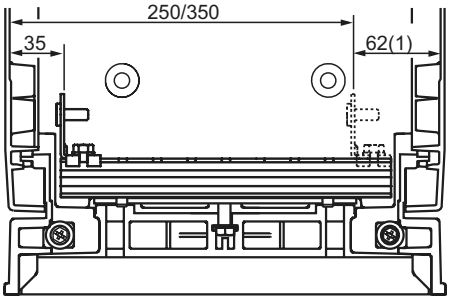

DB300654

(1) 57 mm with one transparent door.

Mounting accessories
Installation accessories

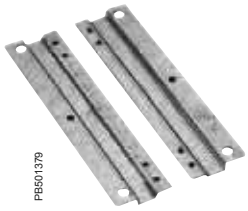

NSYPTZ●●●

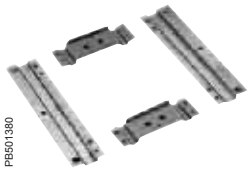

NSYPTZ●●●2P

Adapter plates

- The enclosures with open bottom part (versions PLAZ and PLAZT) require a set of adapter plates for mounting:
– an internal door
– step slides
– modular chassis and 19" chassis
- Material: galvanised steel.
- Fixing on the bottom part of the enclosure by means of M8 inserts and screws (supplied).

For enclosure		Reference
Depth (mm)	N° of doors	
320	1	**NSYPTZ3**
420	1	**NSYPTZ4**
320	2	**NSYPTZ32P**
420	2	**NSYPTZ42P**



Additional support

- Set of 4 additional brackets, to be slid into the step slides, for the installation of an additional mounting plate.

Description	Reference
Additional support	**NSYEDPLA**



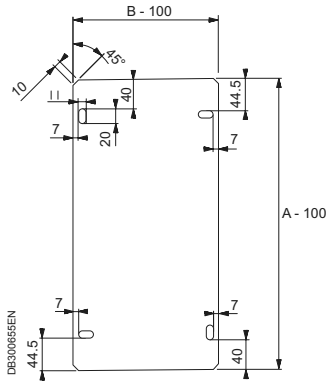

Side mounting plates

- Polyester mounting plates fixed to the sides of the enclosure for additional installations. Installation on the M8 bosses by adding inserts, ref. **NSYTEX8**.

References by unit. Order by multiples of 2 units (2, 4, 6, etc.).

For enclosure (mm)		Reference
Height (A)	Depth (B)	
500	320	**NSYPMLA53**
500	420	**NSYPMLA54**
750	320	**NSYPMLA73**
750	420	**NSYPMLA74**
1000	320	**NSYPMLA103**
1000	420	**NSYPMLA104**
1250	320	**NSYPMLA123**
1250	420	**NSYPMLA124**

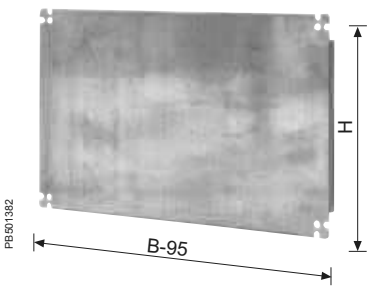

Partial plain mounting plate

- Galvanised sheet-steel mounting plate.
- Direct fixing on the uprights, with the notched sliding nuts or pivoting nuts, see common accessories section.
- Maximum acceptable load: 150 kg/m^2.

For enclosure	Mounting plate height H (mm)	Fixing centre-to-centre distance		Reference
Width B (mm)		Vertical	Horizontal	
750	247	600	200	**NSYSPMP2575**
1000	247	850	200	**NSYSPMP25100**
1000	397	850	350	**NSYSPMP40100**

Mounting accessories
Installation accessories


PB501383

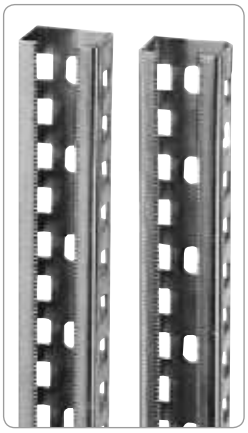
PB501384

Technical uprights

- Supports for fixing rails, perforated grilles and plain partial mounting plates.
- Use the suitable fixings and accessories shown in the common accessory section.
- Material: steel, 2 mm thick.
- Batch of 2 pieces.
- Fixing at the rear on the M8 inserts or on the step slides.

For enclosure Height (mm)	References	Dimensions
750	**NSYTVR7**	625
1000	**NSYTVR10**	875
1250	**NSYTVR125**	1125
1500	**NSYTVR15**	1375

Note: Enclosures with widths of 1000 and 1250 allow the installation of 4 uprights to integrate 2 mounting plates of 500 mm or of 500 and 750 mm.

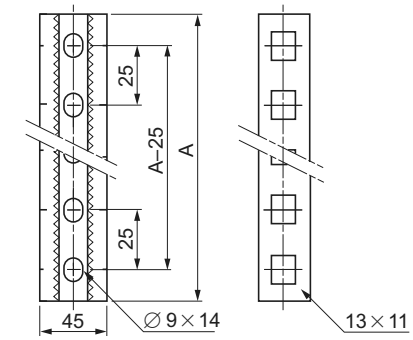



DB300656

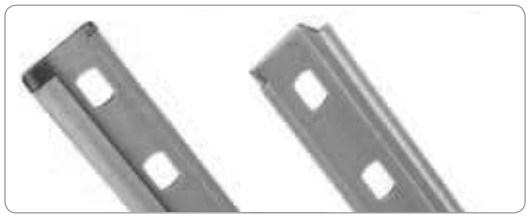
PB500177

Rails

- Symmetric or asymmetric DIN rails for mounting on the technical uprights, ref. **NSYTVR●●●**.
- Fixings and accessories: see common accessories.

References by unit. Order by multiples of 10 units (10, 20, 30, etc.).

For installation in enclosures with width (B) (mm)	DIN rail references	
	Symmetrical 35 × 15 ⊔	Asymmetrical ⊏⊐
500	**NSYCSPLA50**	**NSYCAPLA50**
750	**NSYCSPLA75**	**NSYCAPLA75**
1000 (1)	**NSYCSPLA100**	**NSYCAPLA100**

(1) Enclosures with a width of 1000 mm can accommodate 2 mounting plates with rail types **NSYCSPLA50** or **NSYCAPLA50**.


PB500187

M8 inserts

- To be placed in the bosses moulded on the doors, uprights, rear panels and bottom and top parts, for fixing accessories and assorted devices.

References by unit. Order by multiples of 8 units (8, 16, 24, etc.).

Description	Reference
M8 inserts	**NSYTEX8**

Mounting accessories
Equipment support accessories


PB501385

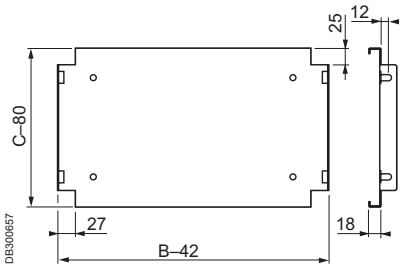

DB300657

Support plate

- Designed to support assorted equipment or simply to install a separation.
- It is installed directly on the bottom part of the enclosure.
- For the installation of one or several support plates, use 2 sets of 2 uprights suitable for the height (to be ordered separately). These uprights offer the option of adjusting the height with a step of 50 mm.
- Galvanised-steel material.
- Delivered with the fixings required for installation.
- In the 2-door enclosures, the installation of the plate or the uprights requires the prior installation of an intermediate support, ref. **NSYSBPLA**, presented below.

For enclosure (mm)		Max. load	Plate Reference
Depth (C)	Width (B)		
320	500	60 kg	**NSYBANPLA53**
320	750	60 kg	**NSYBANPLA73**
420	500	50 kg	**NSYBANPLA54**
420	750	50 kg	**NSYBANPLA74**


PB501288


PB501386

NSYSPLA100

For enclosure Height (mm)	N° of adjustments	Upright Reference
500	-	**-**
750	2	2 × **NSYSPLA75**
1000	3	2 × **NSYSPLA100**
1250	4	2 × **NSYSPLA125**
1500	5	2 × **NSYSPLA150**

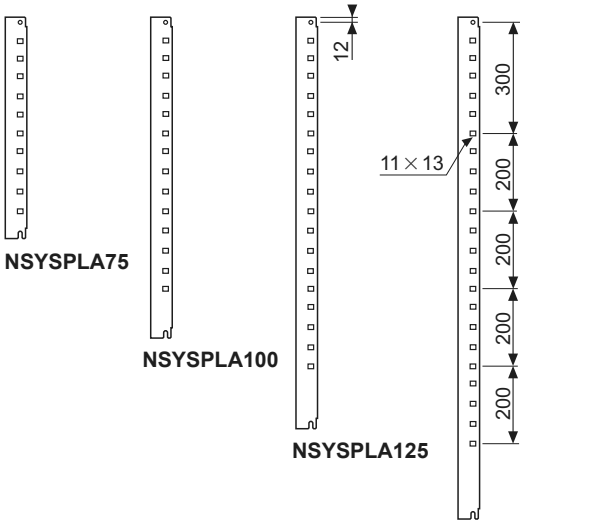

DB300658

NSYSPLA75

NSYSPLA100

NSYSPLA125

NSYSPLA150

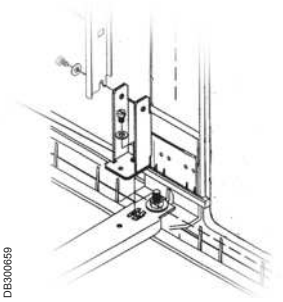
DB300659

Intermediate support in the 2-door enclosures

- Required accessory for installing support plates, ref. **NSYBANPLA•••** or uprights, ref. **NSYSPLA•••** in the 2-door enclosures.

Description	Reference
Intermediate support	**NSYSBPLA**

Accessories



PB500191

Renovation and anti-graffiti paint

- 2-component paint system, specially formulated for polyester enclosures. Renews enclosures and allows easy removal of graffiti.
- Paint composed of: base (80%) and hardener (20%).
- RAL 7032 grey.
- 2 references available:
  - 1 kg:
    - 800 g tin of base paint
    - 200 g tin of hardener
  - 5 kg:
    - 4 kg tin of base paint
    - 1 kg tin of hardener
- Coverage
  - 1 kg = 5 m^2
  - 5 kg = 25 m^2
- Solvent in 500 g bottles to be used as a paint thinner or to clean brushes.

Description	Reference
Anti-graffiti paint 1 kg	**NSYAUPG1**
Anti-graffiti paint 5 kg	**NSYAUPG5**
Anti-graffiti paint solvent 500 g	**NSYAUPGS**


PB501047

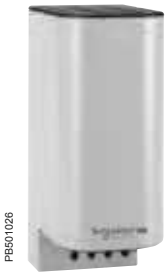
PB501026

Discover our ClimaSys thermal management offer

- Ventilation accessories.
- Filters.
- Regulation accessories.

Power distribution accessories
Modular distribution accessories


PB501387

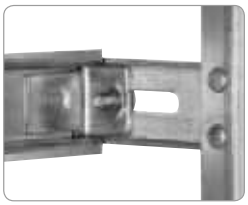
PB501388

Details of the depth adjustment.

Modular distribution chassis

- Chassis for modular switchgear, installed directly in the sealed enclosures (PLA version). For installation in enclosures with open bottom part (PLAZ version) it is necessary to use a set of adapter plates (ref. **NSYPTZ●●●**).
- Chassis made up of cover plates, made from self-extinguishing insulating material, RAL 7032 grey, on a rigid galvanised-steel structure.
- Quick installation without fixings.
- Distance between rail and front panel with adjustable depth from 40 to 85 mm.
- System for identifying electrical circuits supplied.
- Neutral/earth strip: 2×16 mm^2 + 5×6 mm^2 included in the standard offer.
- Incompatibility with: cable-entry plate, internal door, door switch and door retainer (ref. **NSYRETPLAU**).

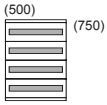

NSYDLP76

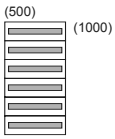

NSYDLP114

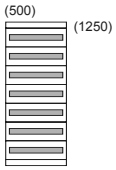

NSYDLP133

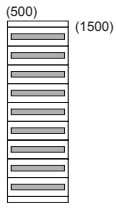

NSYDLP171

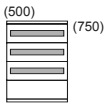

NSYDLP57

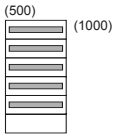

NSYDLP95

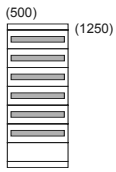

NSYDLP114P

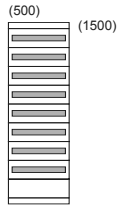

NSYDLP152

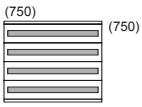

NSYDLP132

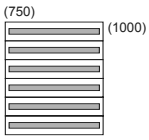

NSYDLP198

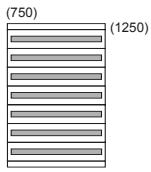

NSYDLP231

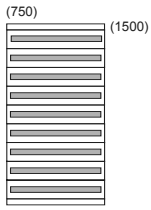

NSYDLP297

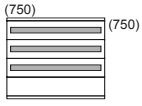

DB300860
NSYDLP99

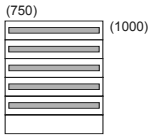

NSYDLP165

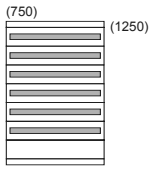

NSYDLP198P

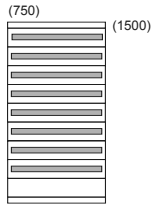

NSYDLP264

Power distribution accessories
Modular distribution accessories

For enclosures (mm)		N° of doors	Reference	Row distribution			
				N° of rows	Rows for module		Number of plates
Height	Width				Number	Number of 18-mm modules	
750	500	1	**NSYDLP76**	4	4	76	-
750	500	1	**NSYDLP57**	4	3	57	1
750	750	1	**NSYDLP132**	4	4	132	-
750	750	1	**NSYDLP99**	4	3	99	1
750	1000	2	2 × **NSYDLP76**	4 + 4	4 + 4	152	-
750	1000	2	2 × **NSYDLP57**	4 + 4	3 + 3	114	1 + 1
750	1250	2	**NSYDLP76** + **NSYDLP132**	4 + 4	4 + 4	208	-
750	1250	2	**NSYDLP57** + **NSYDLP99**	4 + 4	3 + 3	156	1 + 1
1000	500	1	**NSYDLP114**	6	6	114	-
1000	500	1	**NSYDLP95**	6	5	95	1
1000	750	1	**NSYDLP198**	6	6	198	-
1000	750	1	**NSYDLP165**	6	5	165	1
1000	1000	2	2 × **NSYDLP114**	6 + 6	6 + 6	228	-
1000	1000	2	2 × **NSYDLP95**	6 + 6	5 + 5	190	1 + 1
1000	1250	2	**NSYDLP114** + **NSYDLP198**	6 + 6	6 + 6	312	-
1000	1250	2	**NSYDLP95** + **NSYDLP165**	6 + 6	5 + 5	260	1 + 1
1250	500	1	**NSYDLP133**	7	7	133	-
1250	500	1	**NSYDLP114P**	7	6	114	1
1250	750	1	**NSYDLP231**	7	7	231	-
1250	750	1	**NSYDLP198P**	7	6	198	1
1250	1000	2	2 × **NSYDLP133**	7 + 7	7 + 7	266	-
1250	1000	2	2 × **NSYDLP114P**	7 + 7	6 + 6	228	1 + 1
1250	1250	2	**NSYDLP133** + **NSYDLP231**	7 + 7	7 + 7	364	-
1250	1250	2	**NSYDLP114P** + **NSYDLP198P**	7 + 7	6 + 6	312	1 + 1
1500	500	1	**NSYDLP171**	9	9	171	-
1500	500	1	**NSYDLP152**	9	8	152	1
1500	750	1	**NSYDLP297**	9	9	297	-
1500	750	1	**NSYDLP264**	9	8	264	1
1500	1000	2	2 × **NSYDLP171**	9 + 9	9 + 9	342	-
1500	1000	2	2 × **NSYDLP152**	9 + 9	8 + 8	304	-
1500	1250	2	**NSYDLP171** + **NSYDLP297**	9 + 9	9 + 9	468	1 + 1
1500	1250	2	**NSYDLP152** + **NSYDLP264**	9 + 9	8 + 8	416	1 + 1

Power distribution accessories
Modular distribution accessories


PB501389

Detail from front-panel mounting.

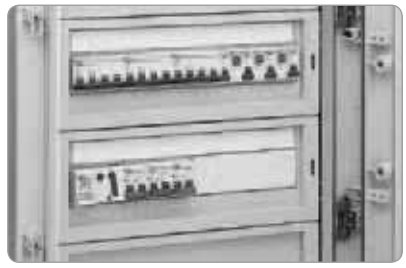
PB501390

Detail from the circuit-marking system.

Dimensions

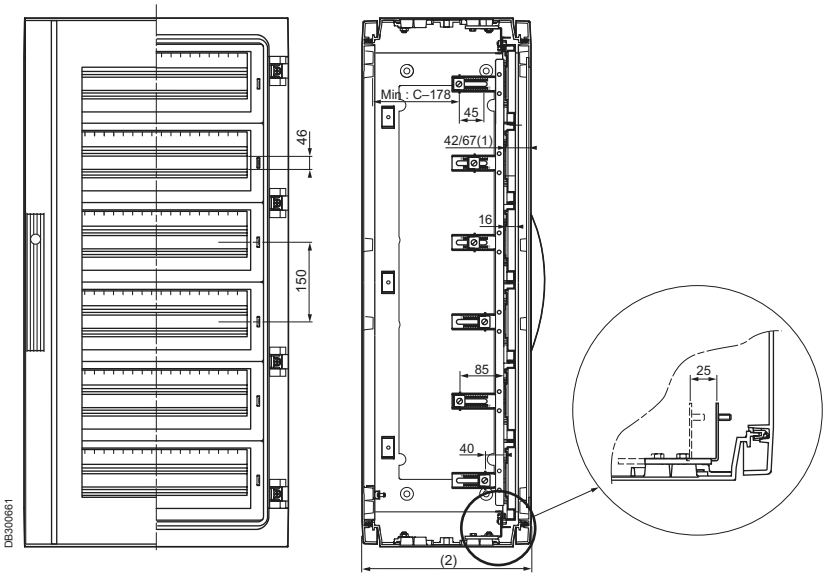

(1) Dimensions of 42 or 67 mm or a pitch of 25 mm, according to the M8 boss chosen for the installation. See details in the enlarged image on the right. In the enclosures with glazed doors, the 2 dimensions are reduced by 5 mm.
(2) C = Depth of the enclosure.

Plain cover plate


PB501391

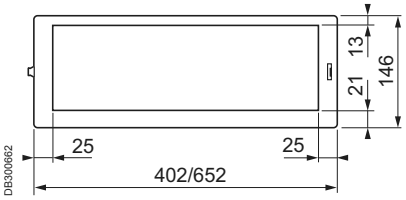

- Self-extinguishing insulating material, RAL 7032 grey, for non-modular switchgear protection.
- Nominal height: 150 mm.
- Order by multiples of 2 (2, 4, 6...).

For enclosure width (mm)	Dimensions (mm)		Reference
	Height	Width	
500	146	402	**NSYCTL500DLP**
750	146	652	**NSYCTL750DLP**

Plain mounting plate


PB501392

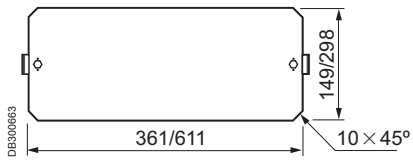

- Plate for fixing non-modular devices.
- Material: galvanised steel, 2 mm thick.
- Depth-adjustable fixing on the supports from 40 to 85 mm.
- Nominal height: 150 mm or 300 mm.
- Order by multiples of 2 (2, 4, 6...).

For enclosure width (mm)	Dimensions (mm)		Reference
	Height	Width	
500	149	361	**NSYPMP500DLP**
750	149	611	**NSYPMP750DLP**
500	298	361	**NSYPMP5002DLP**
750	298	611	**NSYPMP7502DLP**

19" accessories

19” chassis

- Very sturdy 19” metal chassis, designed for installation in enclosures with a width of 750 and 1250 mm. In the 1250 mm enclosure, the chassis is installed in the 750 mm part with an intermediate support, ref. **NSYSBPLA**.
- These chassis are available in 2 versions: fixed and swing.
- These chassis can be used as partial mounting plates in enclosures with higher-than-nominal height.
- Incompatible with the internal doors and the step slides.

PB500184



Enclosure with 19” fixed chassis.

19” fixed chassis

- Fixed chassis made up of 2 uprights with fixings.
- For heights from 750 to 1500 mm, the installation requires ordering 1 batch of 2 matching uprights. If a chassis is installed in an enclosure with a greater height, it is necessary to use the suitable uprights for the size of the enclosure.
- Material: sheet steel, thickness 20 / 10 mm, RAL 7032 grey epoxy-polyester paint.
- Maximum load: 3 kg per U.

For enclosure (mm)		Number of U	Reference	
Height	Width		19” fixed chassis	Batch of 2 uprights
500	750	8	**NSYBRF8PLA**	-
750	750	12	**NSYBRF12PLA**	**NSYSPLA75**
1000	750	17	**NSYBRF17PLA**	**NSYSPLA100**
1250	750	21	**NSYBRF21PLA**	**NSYSPLA125**
1500	750	26	**NSYBRF26PLA**	**NSYSPLA150**

PB500185



Enclosure with 19” swing chassis.

19” swing chassis

- Swing chassis opening to 120° with 5 mm double-bar key lock.
- For heights from 750 to 1500 mm, the installation requires ordering 1 batch of 2 matching uprights. If a chassis is installed in an enclosure with a greater height, it is necessary to use the suitable uprights for the size of the enclosure.
- Material: sheet steel, thickness 20 / 10 mm, RAL 7032 grey epoxy-polyester paint.
- Maximum load: 3 kg per U.

For enclosure (mm)		Number of U	Reference	
Height	Width		19” swing chassis	Batch of 2 uprights
500	750	7	**NSYBRP7PLA**	-
750	750	11	**NSYBRP11PLA**	**NSYSPLA75**
1000	750	16	**NSYBRP16PLA**	**NSYSPLA100**
1250	750	20	**NSYBRP20PLA**	**NSYSPLA125**
1500	750	25	**NSYBRP25PLA**	**NSYSPLA150**

19" accessories

Dimensions

19” fixed chassis

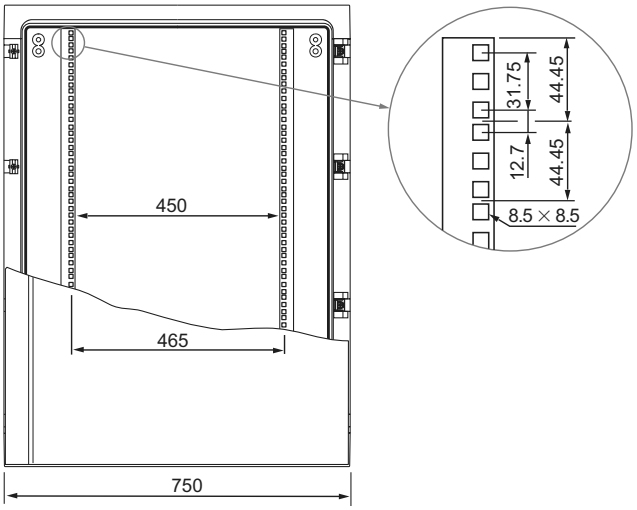

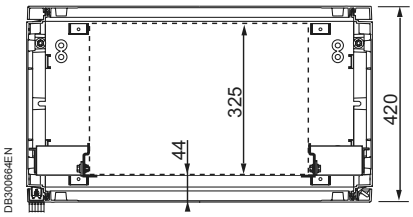

19” swing chassis

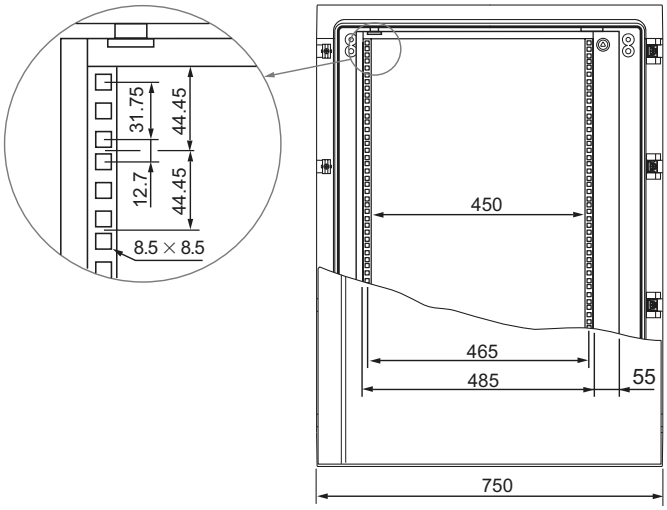

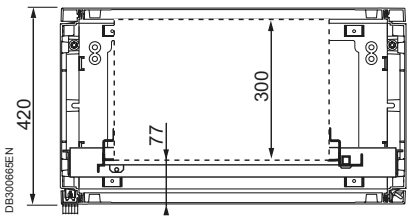

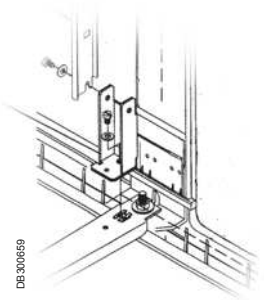

Intermediate support in the 2-door enclosures

- Accessory required for installing uprights, ref. **NSYSPLA●●●**, in the 2-door enclosures.

Description	Reference
Intermediate support	**NSYSBPLA**

PLA customised solution
Configured and specific
Solution guide


PB501393

Thalassa PLA configured or specific polyester floor-standing enclosure

- The configured offer anticipates the most common needs and allows to optimise delivery times. The configuration sheet on the next page defines the limits of this offer and helps you design this solution.
- The specific offer allows the greatest variety of customisations. A help to define a specific need is presented on page **7**.
- The advantages and examples of customised solutions are presented on pages **5** and **6**.

Part	Service	Configured	Specific
	Special design or construction (1)		☑
	Minimum amount	☑	☑
	Maximum amount	☑	
Body and door	Special colour of the material		☑
	Paint colour		☑
	Anti-graffiti paint		☑
Body	Horizontal coupling		☑
	Vertical coupling		☑
	Depthwise coupling	☑	☑
	Body machining on all sides (2)	☑	☑
	Mounting (or supply) of standard accessories of the configured offer (3)	☑	☑
	Mounting (or supply) of other standard PLA accessories		☑
	Mounting (or supply) of other standard common accessories		☑
Door	Rear door installation		☑
	Machining in the door (2)	☑	☑
	Central upright fixed to left door	☑	
	Special glass (dimensions) or window		☑
	Standard catalogue locks (3)	☑	☑
	Special locks not included in the catalogue		To be studied
	Mounting (or supply) of standard accessories of the configured offer (3)	☑	☑
	Mounting (or supply) of other standard PLA accessories		☑
	Mounting (or supply) of other standard common accessories		☑
Mounting plates and rails	Standard mounting plates	☑	☑
	Special mounting plates		To be studied
	Special machining of mounting plates		☑
Cable-entry plates and accessories	Installation of common cable-entry plates and/or cable entries		☑
	Installation of common cable-management accessories		☑
Thermal	Installation of airing devices, fans (3)	☑	☑
Diverse	Machining of the internal door and the cable-gland plates		☑
	Special installation accessories: plinths, external mounting plates, supports, etc.		To be studied
	Accessories not included in the Universal Enclosure offer		To be studied
	Special marking		☑
	Special packaging		☑

(1) Mounting or combination of doors (plain, anti-posting, glazed) and mounting of rear doors with the configured deadline, for the configured amounts.
(2) See areas in DXF diagrams.
(3) The accessories included or installed in the configured offer are shown in the configuration sheet on the next page.

PLA configured solution
Configuration sheet

Configured



PB501393

Document to be sent to your sales office by e-mail or fax

YOUR CONTACT DETAILS

Full name: _____

Company: _____

Address: _____

Tel.: _____ Fax: _____

E-mail: _____

QUANTITY OF ENCLOSURES	.....								
GLAZED DOOR ☐	PLAIN DOOR ☐								
ANTI-POSTING RIBBED DOOR ☐									
HINGES ON THE LEFT ☐									
For 1-door floor-standing enclosure									
CENTRAL UPRIGHT FIXED TO LEFT DOOR ☐									
CHOICE OF VERSION									

CATALOGUE DIMENSIONS (mm)	OR	REFERENCE								
HEIGHT	500 ☐	750 ☐	1000 ☐	1250 ☐	1500 ☐					
WIDTH	500 ☐	750 ☐	1000 ☐	1250 ☐						
DEPTH	320 ☐	420 ☐								
ENHANCED DEPTH (for PLA and PLAZ versions)	575 ☐	775 ☐								
PLA: COMPLETELY SEALED, IP 65 ☐										
PLAT: VENTILATED CANOPY IP 44 ☐										
PLAZ: PLINTH-TYPE OPEN BOTTOM PART, 60 mm, IP 54 ☐										
PLAZT: VENTILATED CANOPY AND PLINTH-TYPE OPEN BOTTOM PART IP 44 ☐										

Choice of standard configured accessories

Also tick the red box m *for accessories installed in the factory.*

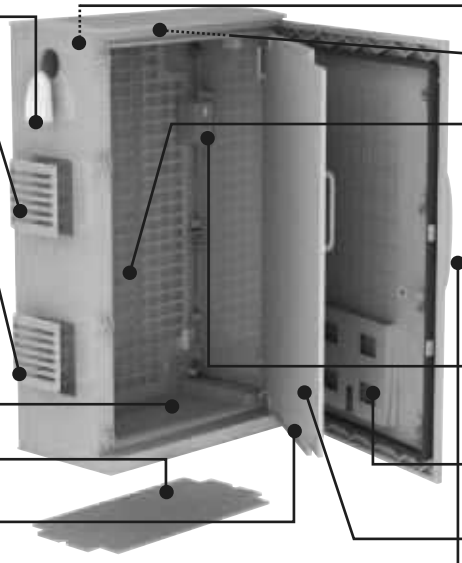

PB501394

- AIRING DEVICE ☐ m ☐
  - REF. NSYCAG33LP
- OUTLET GRILLE m ☐
  - REF. NSYCAG125LPF (RAL 7035) ☐
- FAN m ☐
  - REF. NSYCVF85M230PF (RAL 7035) ☐
- STEP SLIDES ☐ m ☐
- CABLE-ENTRY PLATE ☐ m ☐
- DOOR RETAINER (installed)
  - 90° (FOR VERSIONS PLA, PLAZ, PLAT) ☐
  - 2 POSITIONS (90° AND 120°) ☐
- M8 INSERTS (SET OF 8) ☐
- DOOR SWITCH ☐ m ☐
- KIT IP54 ☐ m ☐
- REAR MOUNTING PLATE
  - PLAIN ☐ m ☐
  - TELEQUICK ☐ m ☐
  - BAKELITE ☐ m ☐
  - POLYESTER ☐ m ☐
  - MODULAR CHASSIS ☐ m ☐
  - 19" FIXED CHASSIS ☐ m ☐
- ☐ THERMOSTAT
  - REF. NSYCCOTHO
- ☐ DOCUMENT POCKET
- ☐ INTERNAL DOOR (installed)
- ☐ LOCK MODIFICATION
  - DETAILS BELOW * ☐
  - PADLOCKING ☐

* Eventual incompatibilities between accessories can't be considered in configurator sheet.

PLA configured solution
Configuration sheet

Configured



PB501393

*Modification of the lock

STANDARD PLA VERSION: ESCUTCHEON AND DOUBLE-BAR INSERT	PLA VERSION: OPTION WITH HANDLE AND DOUBLE-BAR INSERT ☐	PLAT, PLAZ, PLAZT VERSIONS (STANDARD): HANDLE AND DOUBLE-BAR INSERT

CHANGE FOR	
7-mm SQUARE	☐
8-mm SQUARE	☐
8-mm TRIANGULAR	☐

INSERT CHANGE	
CONTROL BY BUTTON	☐
8-mm TRIANGULAR	☐
405 LOCK	☐
1242 LOCK	☐
ADAPTOR FOR DIN LOCK	☐

> Machining

For a quick calculation, please let us know the total number of machining operations required:

ON THE REAR	
ON THE SIDES (TOP/BOTTOM/SIDE)	
FOR GRILLES, FANS AND AIRING DEVICES	
OTHER MACHINING	
ON THE DOOR	

NOTE: Every drill hole or cut-out is a machining operation. The machining areas are specified in the DXF diagrams.

Download the configuration sheets and the DXF diagrams from our website.
Send them back to your sales office with your modifications.
Mandatory when ordering to guarantee configured offer delivery times.

Specific

Other needs, other constraints? Contact us.
A specific offer will meet all your requirements. A help to define a specific need is presented on page **7**.

Advantages of our customised offer and examples of implementations, see pages **5** and **6**.

Make the most of your energy

www.schneider-electric.com

Schneider Electric Industries SAS

35, rue Joseph Monier
CS 30323
F- 92506 Rueil Malmaison Cedex

RCS Nanterre 954 503 439
Capital social 896 313 776 €
www.schneider-electric.com

As standards, specifications and designs change from time to time, please ask for confirmation of the information given in this publication.

Printed on ecological paper

Publication: Schneider Electric
Design-Layout: Tecfa

UE11MK12en

10-2011

© 2011 - Schneider Electric - All rights reserved