MOELLER

Type: **NZMN1–M80**
Article No.: **265721**
Sales text **Circuit–breaker 3p 80A motor protection**



Ordering information			
Motor ratings			
Rated short–circuit current 500 V/525 V	I_q	kA	50
Setting range			
Overload releases			63...80
Short–circuit release			640...1120
Contactor type “1” coordination			DILM80(...)
Contactor type "2" coordination			DILM80(...)

Notes concerning the product group

The motor–starter combination consists of the motor protective circuit–breaker or circuit–breaker and contactor.

They conform with IEC/EN 60947–4–1 or VDE 0660 Part 102.

I_q = Rated conditional short–circuit current.

General			
Standards			IEC/EN 61131–2 IEC/EN 60947–4
Main conducting paths			
Rated impulse withstand voltage	U_{imp}	V AC	6000

Overvoltage category/pollution degree			III/3
Rated operational voltage	U_e	V	230 – 415
Additional technical data			
Further information			PKZM0 motor–protective circuit–breakers, see motor–protective circuit–breakers/PKZM0 product group DILM contactors, see contactors product group DILET timing relay, ETR, see contactors, electronic timing relays product group

Dimensions

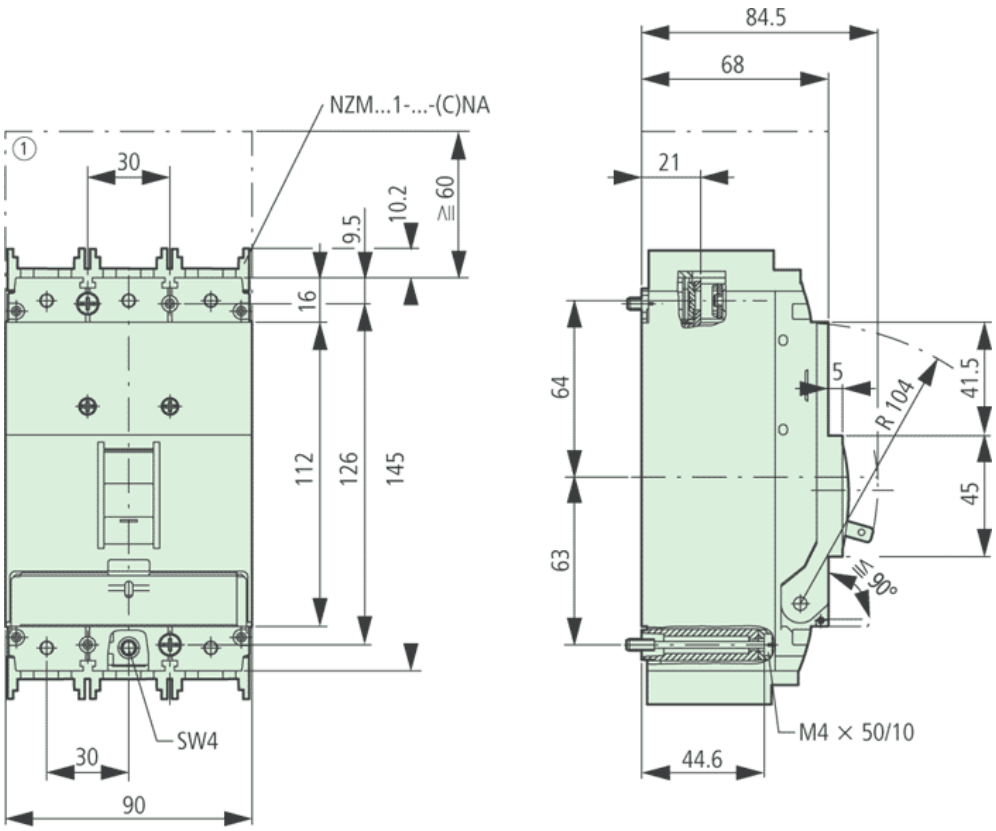

Blow out area, minimum clearance to other parts 60 mm

Dimensions

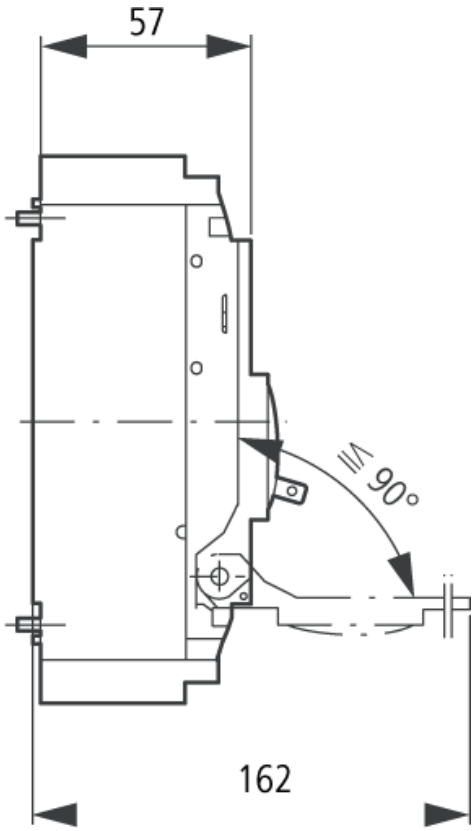

Moeller GmbH, Hein–Moeller–Str. 7–11, D–53115 Bonn
E–Mail: catalog@moeller.net, Internet: www.moeller.net, http://catalog.moeller.net
HPL–C2007G V2.1 © 2007 by Moeller GmbH