Suitable metal enclosures
Overview



Page
0/7

Customised suitable metal enclosures

All RAL and NF colours. All surface treatments. All cut-outs made by high-precision laser, with no burrs or deformations.
Accessory installation in plant.

Suitable metal enclosures
Overview

Main accessories

Side panels	Plinth	Enclosure suites	Lifting systems	Cable-entry plates
			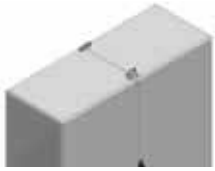	
Page	Page	Page	Page	Page
3/27	3/36	3/31	3/55	3/49 and 3/60

Inner door	Door accessories	Locks and lock inserts
		
Page	Page	Page
3/66	3/68	3/70

Mounting plate	Standard uprights	Technical uprights	Rails	Cross rails	Rail connectors
				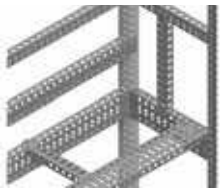	
Page	Page	Page	Page	Page	Page
7/10	7/23	7/24	7/50	7/31	7/59

Suitable metal enclosures
Overview

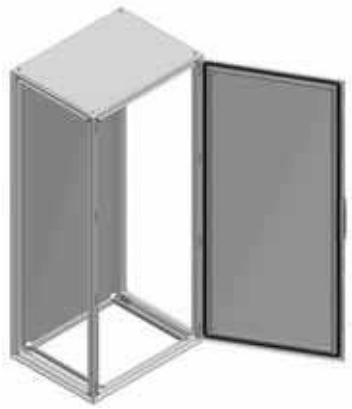





Front door and rear panel, with or without IP55 galvanised mounting plate

Basic composition

- Structure: Top and bottom frame, vertical uprights.
- Front door, two versions:
– Plain door with reinforcement frame.
– Transparent Securit® glass door.
- The double doors are overlapping, with system for fixing the left door.
- Rear panel screwed on with captive screws.
- Removable roof.
- Standard locking system with handle and 5-mm double-bar insert.
- 4 support brackets for the mounting plate.
- Sliding rail for the mounting plate.
- Supply with or without galvanised mounting plate depending on the reference.
- Further options:
– Cross rails.
– Individual and set plinths with heights of 100 and 200 mm.
– Cable-gland plates.

Certifications

– BV, DNV, UL and CUL*.
*1D.- 1, 12, 12K
*2D.- 1, 12, 12K

Easy installation

- The **Spacial SF** suitable metal enclosure is made up of: 4 uprights and 2 frames, top and bottom. Thanks to its use of a single, laser-welded, galvanised-steel structure, the enclosure has great robustness. The structure has cut-outs with a pitch of 25 mm for fixing accessories, using the same type of screw throughout the entire structure.
- The structure of the enclosure allows the integration of panels, thus obtaining the same nominal length (or size) with or without panels.
- Allows several enclosures to be coupled with full versatility. Offers the possibility of creating any desired shape of coupled enclosures, plus the possibility of installing doors on any side of the enclosure. The coupling surface between enclosures offers a double protective barrier against the entry of water and/or dust.
- The panels are made up of:
– Sheet-steel door, painted with epoxy-polyester resin, textured RAL 7035 grey,
– Sheet-steel rear and side panels painted with epoxy-polyester resin, textured RAL 7035 grey, double folded to increase the rigidity and fixed with captive screws that simplify assembly and dismantling.
– Individual plinths or plinths for sets, painted with epoxy-polyester resin, RAL 7022 grey, greatly simplifying cable management.
- A broad range of accessories offered for the production of:
– Plates for automatisms.
– Modular distribution system.
– 19” racks.
– etc.
- Degree of protection IP55 according to IEC 60529.
- Resistance to mechanical impacts: IK10 according to IEC 62262 (IK08 for the transparent doors).

Locking system

- New design, modern appearance, ergonomic, robust, complying with numerous specifications:
– Combination keys.
– Shape inserts.
– Push button.
- Optional:
– Handle lock, lock for versions DIN, KABA, ASSA.
– Handle lock for 2 inserts, "AND" or "OR" combination.
– Padlock locking.
– CNOMO kit.

Suitable metal enclosures

Assembled supply



Nominal dimensions (mm)			No. of doors	Plain door		Transparent door	Side panels	Cable-entry plate		
Height (A)	Width (B)	Depth (C)		With mounting plate	Without mounting plate	Without mounting plate		Plain	1 entry	2 entries
1200	600	400	1	NSYSF12640P	NSYSF12640	-	NSY2SP124	NSYEC64	NSYEC641	-
1200	600	600	1	NSYSF12660P	NSYSF12660	-	NSY2SP126	NSYEC66	NSYEC661	NSYEC662
1200	800	400	1	NSYSF12840P	NSYSF12840	-	NSY2SP124	NSYEC84	NSYEC841	-
1200	800	600	1	NSYSF12860P	NSYSF12860	-	NSY2SP126	NSYEC86	NSYEC861	NSYEC862
1400	600	400	1	NSYSF14640P	NSYSF14640	-	NSY2SP144	NSYEC64	NSYEC641	-
1400	800	400	1	NSYSF14840P	NSYSF14840	-	NSY2SP144	NSYEC84	NSYEC841	-
1600	600	600	1	NSYSF16660P	NSYSF16660	-	NSY2SP166	NSYEC66	NSYEC661	NSYEC662
1600	600	800	1	NSYSF16680P	NSYSF16680	-	NSY2SP168	NSYEC68	NSYEC681	NSYEC682
1600	800	600	1	NSYSF16860P	NSYSF16860	-	NSY2SP166	NSYEC86	NSYEC861	NSYEC862
1600	800	800	1	NSYSF16880P	NSYSF16880	-	NSY2SP168	NSYEC88	NSYEC881	NSYEC882
1800	400	400	1	-	NSYSF18440	-	NSY2SP184	NSYEC44	NSYEC441	-
1800	400	500	1	-	NSYSF18450	-	NSY2SP185	NSYEC45	NSYEC451	-
1800	400	600	1	-	NSYSF18460	-	NSY2SP186	NSYEC46	NSYEC461	-
1800	600	400	1	NSYSF18640P	NSYSF18640	NSYSF18640T	NSY2SP184	NSYEC64	NSYEC641	-
1800	600	500	1	NSYSF18650P	NSYSF18650	NSYSF18650T	NSY2SP185	NSYEC65	NSYEC651	-
1800	600	600	1	NSYSF18660P	NSYSF18660	-	NSY2SP186	NSYEC66	NSYEC661	NSYEC662
1800	600	800	1	-	-	NSYSF18680T	NSY2SP188	NSYEC68	NSYEC681	NSYEC682
1800	800	400	1	NSYSF18840P	NSYSF18840	NSYSF18840T	NSY2SP184	NSYEC84	NSYEC841	-
1800	800	500	1	NSYSF18850P	NSYSF18850	NSYSF18850T	NSY2SP185	NSYEC85	NSYEC851	-
1800	800	600	1	NSYSF18860P	NSYSF18860	NSYSF18860T	NSY2SP186	NSYEC86	NSYEC861	NSYEC862
1800	800	600	2	NSYSF188602DP	NSYSF188602D	-	NSY2SP186	NSYEC86	NSYEC861	NSYEC862
1800	1000	400	1	NSYSF181040P	NSYSF181040	-	NSY2SP184	NSYEC104	NSYEC1041	-
1800	1000	400	2	NSYSF1810402DP	NSYSF1810402D	-	NSY2SP184	NSYEC104	NSYEC1041	-
1800	1000	500	1	NSYSF181050P	NSYSF181050	-	NSY2SP185	NSYEC105	NSYEC1051	-
1800	1000	600	1	NSYSF181060P	NSYSF181060	-	NSY2SP186	NSYEC106	NSYEC1061	NSYEC1062
1800	1000	600	2	NSYSF1810602DP	NSYSF1810602D	-	NSY2SP186	NSYEC106	NSYEC1061	NSYEC1062
1800	1200	400	2	NSYSF1812402DP	NSYSF1812402D	-	NSY2SP184	NSYEC124	NSYEC1241	-
1800	1200	500	2	NSYSF1812502DP	NSYSF1812502D	-	NSY2SP185	NSYEC125	NSYEC1251	-
1800	1200	600	2	NSYSF1812602DP	NSYSF1812602D	-	NSY2SP186	NSYEC126	NSYEC1261	NSYEC1262
2000	300	500	1	-	NSYSF20350	-	NSY2SP205	NSYEC35	NSYEC351	-
2000	300	600	1	-	NSYSF20360	-	NSY2SP206	NSYEC36	NSYEC361	-
2000	300	800	1	-	NSYSF20380	-	NSY2SP208	-	NSYEC381	-
2000	400	400	1	-	NSYSF20440	-	NSY2SP204	NSYEC44	NSYEC441	-
2000	400	500	1	-	NSYSF20450	-	NSY2SP205	NSYEC45	NSYEC451	-
2000	400	600	1	-	NSYSF20460	-	NSY2SP206	NSYEC46	NSYEC461	-
2000	400	800	1	-	NSYSF20480	-	NSY2SP208	NSYEC48	NSYEC481	-
2000	600	400	1	NSYSF20640P	NSYSF20640	NSYSF20640T	NSY2SP204	NSYEC64	NSYEC641	-
2000	600	500	1	NSYSF20650P	NSYSF20650	NSYSF20650T	NSY2SP205	NSYEC65	NSYEC651	-
2000	600	600	1	NSYSF20660P	NSYSF20660	-	NSY2SP206	NSYEC66	NSYEC661	NSYEC662
2000	600	800	1	NSYSF20680P	NSYSF20680	-	NSY2SP208	NSYEC68	NSYEC681	NSYEC682
2000	800	400	1	NSYSF20840P	NSYSF20840	NSYSF20840T	NSY2SP204	NSYEC84	NSYEC841	-
2000	800	500	1	NSYSF20850P	NSYSF20850	NSYSF20850T	NSY2SP205	NSYEC85	NSYEC851	-
2000	800	600	1	NSYSF20860P	NSYSF20860	NSYSF20860T	NSY2SP206	NSYEC86	NSYEC861	NSYEC862
2000	800	600	2	NSYSF208602DP	NSYSF208602D	-	NSY2SP206	NSYEC86	NSYEC861	NSYEC862
2000	800	800	1	NSYSF20880P	NSYSF20880	NSYSF20880T	NSY2SP208	NSYEC88	NSYEC881	NSYEC882
2000	1000	400	1	NSYSF201040P	NSYSF201040	NSYSF201040T	NSY2SP204	NSYEC104	NSYEC1041	-
2000	1000	400	2	NSYSF2010402DP	NSYSF2010402D	-	NSY2SP204	NSYEC104	NSYEC1041	-
2000	1000	500	1	NSYSF201050P	NSYSF201050	NSYSF201050T	NSY2SP205	NSYEC105	NSYEC1051	-
2000	1000	500	2	NSYSF2010502DP	NSYSF2010502D	-	NSY2SP205	NSYEC105	NSYEC1051	-
2000	1000	600	1	NSYSF201060P	NSYSF201060	NSYSF201060T	NSY2SP206	NSYEC106	NSYEC1061	NSYEC1062
2000	1000	600	2	NSYSF2010602DP	NSYSF2010602D	-	NSY2SP206	NSYEC106	NSYEC1061	NSYEC1062
2000	1000	800	1	NSYSF201080P	NSYSF201080	-	NSY2SP208	NSYEC108	NSYEC1081	NSYEC1082
2000	1200	400	2	NSYSF2012402DP	NSYSF2012402D	-	NSY2SP204	NSYEC124	NSYEC1241	-
2000	1200	500	2	NSYSF2012502DP	NSYSF2012502D	-	NSY2SP205	NSYEC125	NSYEC1251	-
2000	1200	600	2	NSYSF2012602DP	NSYSF2012602D	-	NSY2SP206	NSYEC126	NSYEC1261	NSYEC1262
2000	1200	800	2	NSYSF2012802DP	NSYSF2012802D	-	NSY2SP208	NSYEC128	NSYEC1281	NSYEC1282
2000	1600	400	2	NSYSF2016402DP	NSYSF2016402D	-	NSY2SP204	NSYEC164	NSYEC1641	-
2000	1600	500	2	NSYSF2016502DP	NSYSF2016502D	-	NSY2SP205	NSYEC165	NSYEC1651	-
2000	1600	600	2	NSYSF2016602DP	NSYSF2016602D	-	NSY2SP206	NSYEC166	NSYEC1661	NSYEC1662
2200	400	600	1	-	NSYSF22460	-	NSY2SP226	NSYEC46	NSYEC461	-
2200	600	600	1	NSYSF22660P	NSYSF22660	-	NSY2SP226	NSYEC66	NSYEC661	NSYEC662
2200	600	800	1	NSYSF22680P	NSYSF22680	-	NSY2SP228	NSYEC68	NSYEC681	NSYEC682
2200	800	600	1	NSYSF22860P	NSYSF22860	-	NSY2SP226	NSYEC86	NSYEC861	NSYEC862
2200	800	800	1	NSYSF22880P	NSYSF22880	NSYSF22880T	NSY2SP228	NSYEC88	NSYEC881	NSYEC882
2200	1000	600	1	NSYSF221060P	NSYSF221060	-	NSY2SP226	NSYEC106	NSYEC1061	NSYEC1062
2200	1200	600	2	NSYSF2212602DP	NSYSF2212602D	-	NSY2SP226	NSYEC126	NSYEC1261	NSYEC1262
2200	1200	800	2	NSYSF2212802DP	NSYSF2212802D	-	NSY2SP228	NSYEC128	NSYEC1281	NSYEC1282

Enclosure coupling kit page 3/32



Plinth page 3/36



Lifting eyebolts page 3/55



Lifting brackets page 3/55

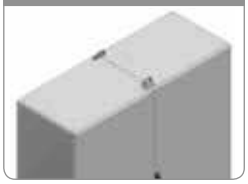

Door cross rail page 3/68



Suitable metal enclosures

Assembled supply







Nominal dimensions (mm)			Plinth				Mounting plate	Intermediate mounting plate	Standard vertical uprights	Technical vertical uprights
			Height 100 (mm)		Height 200 (mm)					
Height (A)	Width (B)	Depth (C)	Front kit (corners + front panels)	Side panels, 2 u.	Front kit (corners + front panels)	Side panels, 4 u.				
1200	600	400	NSYSPF6100	NSYSPS4100	NSYSPF6200	NSYSPS4200	NSYMP126	NSYSIMP12	-	NSYTVR12
1200	600	600	NSYSPF6100	NSYSPS6100	NSYSPF6200	NSYSPS6200	NSYMP126	NSYSIMP12	-	NSYTVR12
1200	800	400	NSYSPF8100	NSYSPS4100	NSYSPF8200	NSYSPS4200	NSYMP128	NSYSIMP12	-	NSYTVR12
1200	800	600	NSYSPF8100	NSYSPS6100	NSYSPF8200	NSYSPS6200	NSYMP128	NSYSIMP12	-	NSYTVR12
1400	600	400	NSYSPF6100	NSYSPS4100	NSYSPF6200	NSYSPS4200	NSYMP146	NSYSIMP14	-	NSYTVR14
1400	800	400	NSYSPF8100	NSYSPS4100	NSYSPF8200	NSYSPS4200	NSYMP148	NSYSIMP14	-	NSYTVR14
1600	600	600	NSYSPF6100	NSYSPS6100	NSYSPF6200	NSYSPS6200	NSYMP166	NSYSIMP16	-	NSYTVR16
1600	600	800	NSYSPF6100	NSYSPS8100	NSYSPF6200	NSYSPS8200	NSYMP166	NSYSIMP16	-	NSYTVR16
1600	800	600	NSYSPF8100	NSYSPS6100	NSYSPF8200	NSYSPS6200	NSYMP168	NSYSIMP16	-	NSYTVR16
1600	800	800	NSYSPF8100	NSYSPS8100	NSYSPF8200	NSYSPS8200	NSYMP168	NSYSIMP16	-	NSYTVR16
1800	400	400	NSYSPF4100	NSYSPS4100	NSYSPF4200	NSYSPS4200	-	-	NSYVR18	NSYTVR18
1800	400	500	NSYSPF4100	NSYSPS5100	NSYSPF4200	NSYSPS5200	-	-	NSYVR18	NSYTVR18
1800	400	600	NSYSPF4100	NSYSPS6100	NSYSPF4200	NSYSPS6200	-	-	NSYVR18	NSYTVR18
1800	600	400	NSYSPF6100	NSYSPS4100	NSYSPF6200	NSYSPS4200	NSYMP186	NSYSIMP18	NSYVR18	NSYTVR18
1800	600	500	NSYSPF6100	NSYSPS5100	NSYSPF6200	NSYSPS5200	NSYMP186	NSYSIMP18	NSYVR18	NSYTVR18
1800	600	600	NSYSPF6100	NSYSPS6100	NSYSPF6200	NSYSPS6200	NSYMP186	NSYSIMP18	NSYVR18	NSYTVR18
1800	600	800	NSYSPF6100	NSYSPS8100	NSYSPF6200	NSYSPS8200	NSYMP186	NSYSIMP18	NSYVR18	NSYTVR18
1800	800	400	NSYSPF8100	NSYSPS4100	NSYSPF8200	NSYSPS4200	NSYMP188	NSYSIMP18	NSYVR18	NSYTVR18
1800	800	500	NSYSPF8100	NSYSPS5100	NSYSPF8200	NSYSPS5200	NSYMP188	NSYSIMP18	NSYVR18	NSYTVR18
1800	800	600	NSYSPF8100	NSYSPS6100	NSYSPF8200	NSYSPS6200	NSYMP188	NSYSIMP18	NSYVR18	NSYTVR18
1800	800	600	NSYSPF8100	NSYSPS6100	NSYSPF8200	NSYSPS6200	NSYMP188	NSYSIMP18	NSYVR18	NSYTVR18
1800	1000	400	NSYSPF10100	NSYSPS4100	NSYSPF10200	NSYSPS4200	NSYMP1810	NSYSIMP18	NSYVR18	NSYTVR18
1800	1000	400	NSYSPF10100	NSYSPS4100	NSYSPF10200	NSYSPS4200	NSYMP1810	NSYSIMP18	NSYVR18	NSYTVR18
1800	1000	500	NSYSPF10100	NSYSPS5100	NSYSPF10200	NSYSPS5200	NSYMP1810	NSYSIMP18	NSYVR18	NSYTVR18
1800	1000	600	NSYSPF10100	NSYSPS6100	NSYSPF10200	NSYSPS6200	NSYMP1810	NSYSIMP18	NSYVR18	NSYTVR18
1800	1000	600	NSYSPF10100	NSYSPS6100	NSYSPF10200	NSYSPS6200	NSYMP1810	NSYSIMP18	NSYVR18	NSYTVR18
1800	1200	400	NSYSPF12100	NSYSPS4100	NSYSPF12200	NSYSPS4200	NSYMP1812	NSYSIMP18	NSYVR18	NSYTVR18
1800	1200	500	NSYSPF12100	NSYSPS5100	NSYSPF12200	NSYSPS5200	NSYMP1812	NSYSIMP18	NSYVR18	NSYTVR18
1800	1200	600	NSYSPF12100	NSYSPS6100	NSYSPF12200	NSYSPS6200	NSYMP1812	NSYSIMP18	NSYVR18	NSYTVR18
2000	300	500	NSYSPF3100	NSYSPS5100	NSYSPF3200	NSYSPS5200	-	-	NSYVR20	NSYTVR20
2000	300	600	NSYSPF3100	NSYSPS6100	NSYSPF3200	NSYSPS6200	-	-	NSYVR20	NSYTVR20
2000	300	800	NSYSPF3100	NSYSPF8100	NSYSPF3200	NSYSPF8200	-	-	NSYVR20	NSYVTR20
2000	400	400	NSYSPF4100	NSYSPS4100	NSYSPF4200	NSYSPS4200	-	-	NSYVR20	NSYTVR20
2000	400	500	NSYSPF4100	NSYSPS5100	NSYSPF4200	NSYSPS5200	-	-	NSYVR20	NSYTVR20
2000	400	600	NSYSPF4100	NSYSPS6100	NSYSPF4200	NSYSPS6200	-	-	NSYVR20	NSYTVR20
2000	400	800	NSYSPF4100	NSYSPS8100	NSYSPF4200	NSYSPS8200	-	-	NSYVR20	NSYTVR20
2000	600	400	NSYSPF6100	NSYSPS4100	NSYSPF6200	NSYSPS4200	NSYMP206	NSYSIMP20	NSYVR20	NSYTVR20
2000	600	500	NSYSPF6100	NSYSPS5100	NSYSPF6200	NSYSPS5200	NSYMP206	NSYSIMP20	NSYVR20	NSYTVR20
2000	600	600	NSYSPF6100	NSYSPS6100	NSYSPF6200	NSYSPS6200	NSYMP206	NSYSIMP20	NSYVR20	NSYTVR20
2000	600	800	NSYSPF6100	NSYSPS8100	NSYSPF6200	NSYSPS8200	NSYMP206	NSYSIMP20	NSYVR20	NSYTVR20
2000	800	400	NSYSPF8100	NSYSPS4100	NSYSPF8200	NSYSPS4200	NSYMP208	NSYSIMP20	NSYVR20	NSYTVR20
2000	800	500	NSYSPF8100	NSYSPS5100	NSYSPF8200	NSYSPS5200	NSYMP208	NSYSIMP20	NSYVR20	NSYTVR20
2000	800	600	NSYSPF8100	NSYSPS6100	NSYSPF8200	NSYSPS6200	NSYMP208	NSYSIMP20	NSYVR20	NSYTVR20
2000	800	600	NSYSPF8100	NSYSPS6100	NSYSPF8200	NSYSPS6200	NSYMP208	NSYSIMP20	NSYVR20	NSYTVR20
2000	800	800	NSYSPF8100	NSYSPS8100	NSYSPF8200	NSYSPS8200	NSYMP208	NSYSIMP20	NSYVR20	NSYTVR20
2000	1000	400	NSYSPF10100	NSYSPS4100	NSYSPF10200	NSYSPS4200	NSYMP2010	NSYSIMP20	NSYVR20	NSYTVR20
2000	1000	400	NSYSPF10100	NSYSPS4100	NSYSPF10200	NSYSPS4200	NSYMP2010	NSYSIMP20	NSYVR20	NSYTVR20
2000	1000	500	NSYSPF10100	NSYSPS5100	NSYSPF10200	NSYSPS5200	NSYMP2010	NSYSIMP20	NSYVR20	NSYTVR20
2000	1000	500	NSYSPF10100	NSYSPS5100	NSYSPF10200	NSYSPS5200	NSYMP2010	NSYSIMP20	NSYVR20	NSYTVR20
2000	1000	600	NSYSPF10100	NSYSPS6100	NSYSPF10200	NSYSPS6200	NSYMP2010	NSYSIMP20	NSYVR20	NSYTVR20
2000	1000	600	NSYSPF10100	NSYSPS6100	NSYSPF10200	NSYSPS6200	NSYMP2010	NSYSIMP20	NSYVR20	NSYTVR20
2000	1000	800	NSYSPF10100	NSYSPS8100	NSYSPF10200	NSYSPS8200	NSYMP2010	NSYSIMP20	NSYVR20	NSYTVR20
2000	1200	400	NSYSPF12100	NSYSPS4100	NSYSPF12200	NSYSPS4200	NSYMP2012	NSYSIMP20	NSYVR20	NSYTVR20
2000	1200	500	NSYSPF12100	NSYSPS5100	NSYSPF12200	NSYSPS5200	NSYMP2012	NSYSIMP20	NSYVR20	NSYTVR20
2000	1200	600	NSYSPF12100	NSYSPS6100	NSYSPF12200	NSYSPS6200	NSYMP2012	NSYSIMP20	NSYVR20	NSYTVR20
2000	1200	800	NSYSPF12100	NSYSPS8100	NSYSPF12200	NSYSPS8200	NSYMP2012	NSYSIMP20	NSYVR20	NSYTVR20
2000	1600	400	NSYSPF16100	NSYSPS4100	NSYSPF16200	NSYSPS4200	NSYMP2016	NSYSIMP20	NSYVR20	NSYTVR20
2000	1600	500	NSYSPF16100	NSYSPS5100	NSYSPF16200	NSYSPS5200	NSYMP2016	NSYSIMP20	NSYVR20	NSYTVR20
2000	1600	600	NSYSPF16100	NSYSPS6100	NSYSPF16200	NSYSPS6200	NSYMP2016	NSYSIMP20	NSYVR20	NSYTVR20
2200	400	600	NSYSPF4100	NSYSPS6100	NSYSPF4200	NSYSPS6200	-	-	NSYVR22	NSYTVR22
2200	600	600	NSYSPF6100	NSYSPS6100	NSYSPF6200	NSYSPS6200	NSYMP226	NSYSIMP22	NSYVR22	NSYTVR22
2200	600	800	NSYSPF6100	NSYSPS8100	NSYSPF6200	NSYSPS8200	NSYMP226	NSYSIMP22	NSYVR22	NSYTVR22
2200	800	600	NSYSPF8100	NSYSPS6100	NSYSPF8200	NSYSPS6200	NSYMP228	NSYSIMP22	NSYVR22	NSYTVR22
2200	800	800	NSYSPF8100	NSYSPS8100	NSYSPF8200	NSYSPS8200	NSYMP228	NSYSIMP22	NSYVR22	NSYTVR22
2200	1000	600	NSYSPF10100	NSYSPS6100	NSYSPF10200	NSYSPS6200	NSYMP2210	NSYSIMP22	NSYVR22	NSYTVR22
2200	1200	600	NSYSPF12100	NSYSPS6100	NSYSPF12200	NSYSPS6200	NSYMP2212	NSYSIMP22	NSYVR22	NSYTVR22
2200	1200	800	NSYSPF12100	NSYSPS8100	NSYSPF12200	NSYSPS8200	NSYMP2212	NSYSIMP22	NSYVR22	NSYTVR22

Document pocket page 3/69



Door switch page 7/134



Locks and lock inserts page 3/70



Cross rails page 7/31

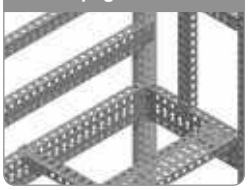

Cable management page 7/114



Suitable metal enclosures
Supplied as a kit



Basic composition

For the construction of a suitable metal enclosure, the following must be ordered separately:

- Galvanised-steel structure, with a single laser-welded profile:
  – Bottom and top frame with roof.
  – Set of 4 vertical uprights.
- Sheet-steel panels, painted with epoxy-polyester resin, textured RAL 7035 grey:
  – Rear panel to be screwed on from the outside.
  – Plain door, single or double, with hinges, catches for the locking bars and reinforcement frame, made up of two vertical uprights and two height-adjustable door cross rails.
  – Transparent Securit® glass door, with hinges and catches for the locking bars.
- Further options:
- Composition accessories such as:
  – Plinths with heights of 100 and 200 mm.
  – Cable-entry plate, plain, with 1 entry and 2 entries.
  – Lifting accessories, door equipment, enclosure suites.
  – Lighting accessories.
  – Ventilation systems, etc.
- Mounting accessories.
- Cable management accessories.
- Power distribution accessories.
- Modular distribution accessories.
- Lighting accessories.
- Aeration, ventilation and air-conditioning systems.

Certifications

- BV, DNV, UL*, CUL.
  *1D.- 1, 12, 12K
  2D.- 1, 12, 12K



Assembled supply

Supply in kit form

Advantages of the kit formula

- Very short structure assembly time: only 15 minutes, with the attachment of 8 screws.
- Reduction of the required working surface.
- Reduction of the volume required for transport and storage.
- Possibility of working on the panels and assembling the enclosure directly before cabling.
- Possibility of having spare panels.
- Great freedom for creating your own enclosure, combining all the available elements.

Suitable metal enclosures
Supplied as a kit

Placement and screwing of the 4 vertical uprights at the corners of the top and bottom frames. Fixing by 8 screws, one at each corner of the enclosure.

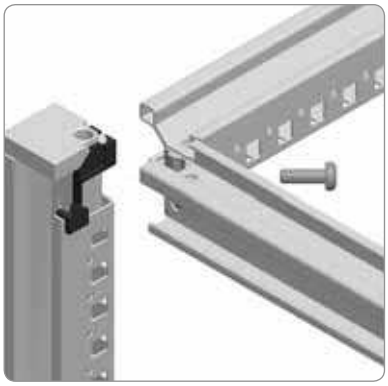

Fixing of the hinges and the catches of the locking bar on the vertical uprights. Door installation inserting the captive pins of the hinge in their housing in the door.





Suspension of the rear panel using a self-centring piece to facilitate screwing.



Screwing the panel on using captive screws, screwed directly onto the structure.



Suitable metal enclosures

Supplied as a kit



Nominal dimensions (mm)			No. of doors	Vertical uprights	Bottom frame and top frame with roof	Rear panel	Side panels	Plain door (1)	Transparent door (Securit® glass) (1)	Mounting plate
Height (A)	Width (B)	Depth (C)		Painted with epoxy-polyester resin, textured RAL 7035						
1200	600	400	1	NSYSFV12	NSYSFC64	NSYBP126	NSY2SP124	NSYSFD126	NSYSFD126T	NSYMP126
1200	600	500	1	NSYSFV12	NSYSFC65	NSYBP126	NSY2SP125	NSYSFD126	NSYSFD126T	NSYMP126
1200	600	600	1	NSYSFV12	NSYSFC66	NSYBP126	NSY2SP126	NSYSFD126	NSYSFD126T	NSYMP126
1200	600	800	1	NSYSFV12	NSYSFC68	NSYBP126	NSY2SP128	NSYSFD126	NSYSFD126T	NSYMP126
1200	800	400	1	NSYSFV12	NSYSFC84	NSYBP128	NSY2SP124	NSYSFD128	NSYSFD128T	NSYMP128
1200	800	500	1	NSYSFV12	NSYSFC85	NSYBP128	NSY2SP125	NSYSFD128	NSYSFD128T	NSYMP128
1200	800	600	1	NSYSFV12	NSYSFC86	NSYBP128	NSY2SP126	NSYSFD128	NSYSFD128T	NSYMP128
1200	800	800	1	NSYSFV12	NSYSFC88	NSYBP128	NSY2SP128	NSYSFD128	NSYSFD128T	NSYMP128
1400	600	400	1	NSYSFV14	NSYSFC64	NSYBP146	NSY2SP144	NSYSFD146	NSYSFD146T	NSYMP146
1400	600	500	1	NSYSFV14	NSYSFC65	NSYBP146	NSY2SP145	NSYSFD146	NSYSFD146T	NSYMP146
1400	600	600	1	NSYSFV14	NSYSFC66	NSYBP146	NSY2SP146	NSYSFD146	NSYSFD146T	NSYMP146
1400	600	800	1	NSYSFV14	NSYSFC68	NSYBP146	NSY2SP148	NSYSFD146	NSYSFD146T	NSYMP146
1400	800	400	1	NSYSFV14	NSYSFC84	NSYBP148	NSY2SP144	NSYSFD148	NSYSFD148T	NSYMP148
1400	800	500	1	NSYSFV14	NSYSFC85	NSYBP148	NSY2SP145	NSYSFD148	NSYSFD148T	NSYMP148
1400	800	600	1	NSYSFV14	NSYSFC86	NSYBP148	NSY2SP146	NSYSFD148	NSYSFD148T	NSYMP148
1400	800	800	1	NSYSFV14	NSYSFC88	NSYBP148	NSY2SP148	NSYSFD148	NSYSFD148T	NSYMP148
1600	600	400	1	NSYSFV16	NSYSFC64	NSYBP166	NSY2SP164	NSYSFD166	NSYSFD166T	NSYMP166
1600	600	500	1	NSYSFV16	NSYSFC65	NSYBP166	NSY2SP165	NSYSFD166	NSYSFD166T	NSYMP166
1600	600	600	1	NSYSFV16	NSYSFC66	NSYBP166	NSY2SP166	NSYSFD166	NSYSFD166T	NSYMP166
1600	600	800	1	NSYSFV16	NSYSFC68	NSYBP166	NSY2SP168	NSYSFD166	NSYSFD166T	NSYMP166
1600	800	400	1	NSYSFV16	NSYSFC84	NSYBP168	NSY2SP164	NSYSFD168	NSYSFD168T	NSYMP168
1600	800	500	1	NSYSFV16	NSYSFC85	NSYBP168	NSY2SP165	NSYSFD168	NSYSFD168T	NSYMP168
1600	800	600	1	NSYSFV16	NSYSFC86	NSYBP168	NSY2SP166	NSYSFD168	NSYSFD168T	NSYMP168
1600	800	800	1	NSYSFV16	NSYSFC88	NSYBP168	NSY2SP168	NSYSFD168	NSYSFD168T	NSYMP168
1800	400	400	1	NSYSFV18	NSYSFC44	NSYBP184	NSY2SP184	NSYSFD184	-	-
1800	400	500	1	NSYSFV18	NSYSFC45	NSYBP184	NSY2SP185	NSYSFD184	-	-
1800	400	600	1	NSYSFV18	NSYSFC46	NSYBP184	NSY2SP186	NSYSFD184	-	-
1800	400	800	1	NSYSFV18	NSYSFC48	NSYBP184	NSY2SP188	NSYSFD184	-	-
1800	600	400	1	NSYSFV18	NSYSFC64	NSYBP186	NSY2SP184	NSYSFD186	NSYSFD186T	NSYMP186
1800	600	500	1	NSYSFV18	NSYSFC65	NSYBP186	NSY2SP185	NSYSFD186	NSYSFD186T	NSYMP186
1800	600	600	1	NSYSFV18	NSYSFC66	NSYBP186	NSY2SP186	NSYSFD186	NSYSFD186T	NSYMP186
1800	600	800	1	NSYSFV18	NSYSFC68	NSYBP186	NSY2SP188	NSYSFD186	NSYSFD186T	NSYMP186
1800	800	400	1	NSYSFV18	NSYSFC84	NSYBP188	NSY2SP184	NSYSFD188	NSYSFD188T	NSYMP188
1800	800	500	1	NSYSFV18	NSYSFC85	NSYBP188	NSY2SP185	NSYSFD188	NSYSFD188T	NSYMP188
1800	800	600	1	NSYSFV18	NSYSFC86	NSYBP188	NSY2SP186	NSYSFD188	NSYSFD188T	NSYMP188
1800	800	600	2	NSYSFV18	NSYSFC86	NSYBP188	NSY2SP186	NSYSFD1882D	-	NSYMP188
1800	800	800	1	NSYSFV18	NSYSFC88	NSYBP188	NSY2SP188	NSYSFD188	NSYSFD188T	NSYMP188
1800	800	800	2	NSYSFV18	NSYSFC88	NSYBP188	NSY2SP188	NSYSFD1882D	-	NSYMP188
1800	1000	400	1	NSYSFV18	NSYSFC104	NSYBP1810	NSY2SP184	NSYSFD1810	NSYSFD1810T	NSYMP1810
1800	1000	400	2	NSYSFV18	NSYSFC104	NSYBP1810	NSY2SP184	NSYSFD18102D	-	NSYMP1810
1800	1000	500	1	NSYSFV18	NSYSFC105	NSYBP1810	NSY2SP185	NSYSFD1810	NSYSFD1810T	NSYMP1810
1800	1000	600	1	NSYSFV18	NSYSFC106	NSYBP1810	NSY2SP186	NSYSFD1810	NSYSFD1810T	NSYMP1810
1800	1000	600	2	NSYSFV18	NSYSFC106	NSYBP1810	NSY2SP186	NSYSFD18102D	-	NSYMP1810
1800	1000	800	1	NSYSFV18	NSYSFC108	NSYBP1810	NSY2SP188	NSYSFD1810	NSYSFD1810T	NSYMP1810
1800	1000	800	2	NSYSFV18	NSYSFC108	NSYBP1810	NSY2SP188	NSYSFD18102D	-	NSYMP1810
1800	1200	400	2	NSYSFV18	NSYSFC124	NSYBP1812	NSY2SP184	NSYSFD18122D	NSYSFD18122DT	NSYMP1812
1800	1200	500	2	NSYSFV18	NSYSFC125	NSYBP1812	NSY2SP185	NSYSFD18122D	NSYSFD18122DT	NSYMP1812
1800	1200	600	2	NSYSFV18	NSYSFC126	NSYBP1812	NSY2SP186	NSYSFD18122D	NSYSFD18122DT	NSYMP1812
1800	1200	800	2	NSYSFV18	NSYSFC128	NSYBP1812	NSY2SP188	NSYSFD18122D	NSYSFD18122DT	NSYMP1812

(1) Hinges, locking bar catches and handle with 5-mm double-bar insert included.

Enclosure coupling kit
page 3/32



Plinth
page 3/36



Cable-gland plate
pages 3/49 and 3/60



Lifting eyebolts
page 3/55



Door accessories
page 3/68



Suitable metal enclosures

Supplied as a kit



Nominal dimensions (mm)			No. of doors	Vertical uprights	Bottom frame and top frame with roof	Rear panel	Side panels	Plain door (1)	Transparent door (Securit® glass) (1)	Mounting plate
Height (A)	Width (B)	Depth (C)		Painted with epoxy-polyester resin, textured RAL 7035						
2000	300	500	1	NSYSFV20	NSYSFC35	NSYBP203	NSY2SP205	NSYSFD203	-	-
2000	300	600	1	NSYSFV20	NSYSFC36	NSYBP203	NSY2SP206	NSYSFD203	-	-
2000	400	400	1	NSYSFV20	NSYSFC44	NSYBP204	NSY2SP204	NSYSFD204	-	-
2000	400	500	1	NSYSFV20	NSYSFC45	NSYBP204	NSY2SP205	NSYSFD204	-	-
2000	400	600	1	NSYSFV20	NSYSFC46	NSYBP204	NSY2SP206	NSYSFD204	-	-
2000	400	800	1	NSYSFV20	NSYSFC48	NSYBP204	NSY2SP208	NSYSFD204	-	-
2000	600	400	1	NSYSFV20	NSYSFC64	NSYBP206	NSY2SP204	NSYSFD206	NSYSFD206T	NSYMP206
2000	600	500	1	NSYSFV20	NSYSFC65	NSYBP206	NSY2SP205	NSYSFD206	NSYSFD206T	NSYMP206
2000	600	600	1	NSYSFV20	NSYSFC66	NSYBP206	NSY2SP206	NSYSFD206	NSYSFD206T	NSYMP206
2000	600	800	1	NSYSFV20	NSYSFC68	NSYBP206	NSY2SP208	NSYSFD206	NSYSFD206T	NSYMP206
2000	800	400	1	NSYSFV20	NSYSFC84	NSYBP208	NSY2SP204	NSYSFD208	NSYSFD208T	NSYMP208
2000	800	500	1	NSYSFV20	NSYSFC85	NSYBP208	NSY2SP205	NSYSFD208	NSYSFD208T	NSYMP208
2000	800	600	1	NSYSFV20	NSYSFC86	NSYBP208	NSY2SP206	NSYSFD208	NSYSFD208T	NSYMP208
2000	800	600	2	NSYSFV20	NSYSFC86	NSYBP208	NSY2SP206	NSYSFD2082D	-	NSYMP208
2000	800	800	1	NSYSFV20	NSYSFC88	NSYBP208	NSY2SP208	NSYSFD208	NSYSFD208T	NSYMP208
2000	800	800	2	NSYSFV20	NSYSFC88	NSYBP208	NSY2SP208	NSYSFD2082D	-	NSYMP208
2000	1000	400	1	NSYSFV20	NSYSFC104	NSYBP2010	NSY2SP204	NSYSFD2010	NSYSFD2010T	NSYMP2010
2000	1000	400	2	NSYSFV20	NSYSFC104	NSYBP2010	NSY2SP204	NSYSFD20102D	-	NSYMP2010
2000	1000	500	1	NSYSFV20	NSYSFC105	NSYBP2010	NSY2SP205	NSYSFD2010	NSYSFD2010T	NSYMP2010
2000	1000	500	2	NSYSFV20	NSYSFC105	NSYBP2010	NSY2SP205	NSYSFD20102D	-	NSYMP2010
2000	1000	600	1	NSYSFV20	NSYSFC106	NSYBP2010	NSY2SP206	NSYSFD2010	NSYSFD2010T	NSYMP2010
2000	1000	600	2	NSYSFV20	NSYSFC106	NSYBP2010	NSY2SP206	NSYSFD20102D	-	NSYMP2010
2000	1000	800	1	NSYSFV20	NSYSFC108	NSYBP2010	NSY2SP208	NSYSFD2010	NSYSFD2010T	NSYMP2010
2000	1000	800	2	NSYSFV20	NSYSFC108	NSYBP2010	NSY2SP208	NSYSFD20102D	-	NSYMP2010
2000	1200	400	2	NSYSFV20	NSYSFC124	NSYBP2012	NSY2SP204	NSYSFD20122D	NSYSFD20122DT	NSYMP2012
2000	1200	500	2	NSYSFV20	NSYSFC125	NSYBP2012	NSY2SP205	NSYSFD20122D	NSYSFD20122DT	NSYMP2012
2000	1200	600	2	NSYSFV20	NSYSFC126	NSYBP2012	NSY2SP206	NSYSFD20122D	NSYSFD20122DT	NSYMP2012
2000	1200	800	2	NSYSFV20	NSYSFC128	NSYBP2012	NSY2SP208	NSYSFD20122D	NSYSFD20122DT	NSYMP2012
2000	1600	400	2	NSYSFV20	NSYSFC164	NSYBP2016	NSY2SP204	NSYSFD20162D	-	NSYMP2016
2000	1600	500	2	NSYSFV20	NSYSFC165	NSYBP2016	NSY2SP205	NSYSFD20162D	-	NSYMP2016
2000	1600	600	2	NSYSFV20	NSYSFC166	NSYBP2016	NSY2SP206	NSYSFD20162D	-	NSYMP2016
2200	400	400	1	NSYSFV22	NSYSFC44	NSYBP224	NSY2SP224	NSYSFD224	-	-
2200	400	500	1	NSYSFV22	NSYSFC45	NSYBP224	NSY2SP225	NSYSFD224	-	-
2200	400	600	1	NSYSFV22	NSYSFC46	NSYBP224	NSY2SP226	NSYSFD224	-	-
2200	400	800	1	NSYSFV22	NSYSFC48	NSYBP224	NSY2SP228	NSYSFD224	-	-
2200	600	400	1	NSYSFV22	NSYSFC64	NSYBP226	NSY2SP224	NSYSFD226	NSYSFD226T	NSYMP226
2200	600	500	1	NSYSFV22	NSYSFC65	NSYBP226	NSY2SP225	NSYSFD226	NSYSFD226T	NSYMP226
2200	600	600	1	NSYSFV22	NSYSFC66	NSYBP226	NSY2SP226	NSYSFD226	NSYSFD226T	NSYMP226
2200	600	800	1	NSYSFV22	NSYSFC68	NSYBP226	NSY2SP228	NSYSFD226	NSYSFD226T	NSYMP226
2200	800	400	1	NSYSFV22	NSYSFC84	NSYBP228	NSY2SP224	NSYSFD228	NSYSFD228T	NSYMP228
2200	800	500	1	NSYSFV22	NSYSFC85	NSYBP228	NSY2SP225	NSYSFD228	NSYSFD228T	NSYMP228
2200	800	600	1	NSYSFV22	NSYSFC86	NSYBP228	NSY2SP226	NSYSFD228	NSYSFD228T	NSYMP228
2200	800	800	1	NSYSFV22	NSYSFC88	NSYBP228	NSY2SP228	NSYSFD228	NSYSFD228T	NSYMP228
2200	1000	400	1	NSYSFV22	NSYSFC104	NSYBP2210	NSY2SP224	NSYSFD2210	NSYSFD2210T	NSYMP2210
2200	1000	500	1	NSYSFV22	NSYSFC105	NSYBP2210	NSY2SP225	NSYSFD2210	NSYSFD2210T	NSYMP2210
2200	1000	600	1	NSYSFV22	NSYSFC106	NSYBP2210	NSY2SP226	NSYSFD2210	NSYSFD2210T	NSYMP2210
2200	1000	800	1	NSYSFV22	NSYSFC108	NSYBP2210	NSY2SP228	NSYSFD2210	NSYSFD2210T	NSYMP2210
2200	1200	400	2	NSYSFV22	NSYSFC124	NSYBP2212	NSY2SP224	NSYSFD22122D	NSYSFD22122DT	NSYMP2212
2200	1200	500	2	NSYSFV22	NSYSFC125	NSYBP2212	NSY2SP225	NSYSFD22122D	NSYSFD22122DT	NSYMP2212
2200	1200	600	2	NSYSFV22	NSYSFC126	NSYBP2212	NSY2SP226	NSYSFD22122D	NSYSFD22122DT	NSYMP2212
2200	1200	800	2	NSYSFV22	NSYSFC128	NSYBP2212	NSY2SP228	NSYSFD22122D	NSYSFD22122DT	NSYMP2212

(1) Hinges, locking bar catches and handle with 5-mm double-bar insert included.

Cross rails
page 7/31

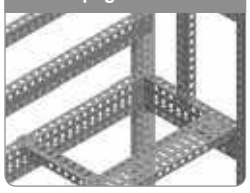

Trays
page 7/44



Cable management
page 7/114



Modular distribution
page 7/74



19" racks
page 3/95



Suitable metal enclosures
Dimensions

Dimensions

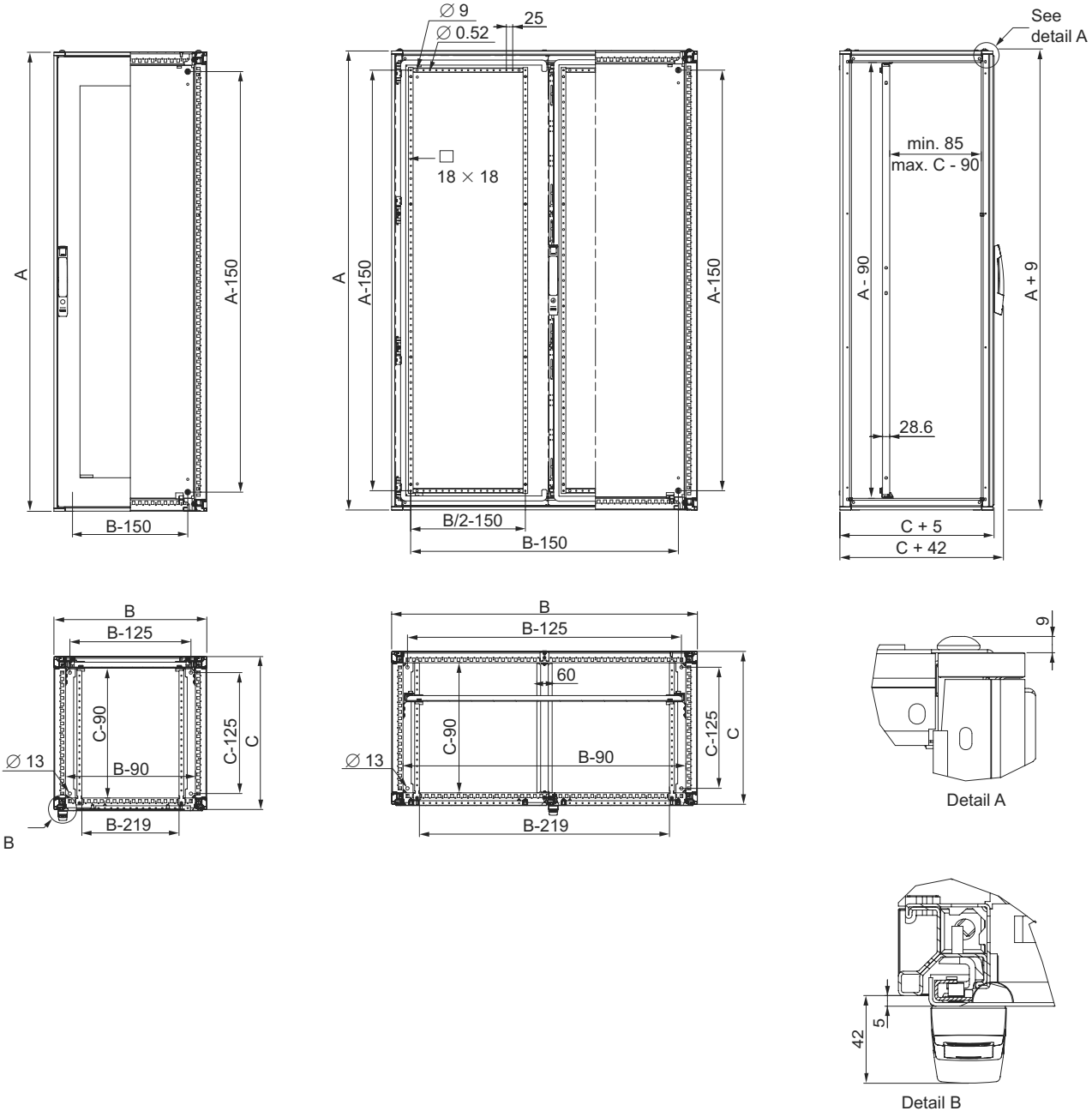

Composition accessories
Panels



Side panels

External fixing

- Set of 2 side panels fixed from the outside of the enclosure.
- Captive screws.
- Material: steel.
- Finish: painted with epoxy-polyester resin, textured RAL 7035 grey.

Supply: 2 side panels fixed from the outside and fixing elements.

Nominal dimensions (mm)		Reference
Height	Depth	
1200	400	**NSY2SP124**
	500	**NSY2SP125**
	600	**NSY2SP126**
	800	**NSY2SP128**
1400	400	**NSY2SP144**
	500	**NSY2SP145**
	600	**NSY2SP146**
	800	**NSY2SP148**
1600	400	**NSY2SP164**
	500	**NSY2SP165**
	600	**NSY2SP166**
	800	**NSY2SP168**
1800	400	**NSY2SP184**
	500	**NSY2SP185**
	600	**NSY2SP186**
	800	**NSY2SP188**
2000	400	**NSY2SP204**
	500	**NSY2SP205**
	600	**NSY2SP206**
	800	**NSY2SP208**
2200	400	**NSY2SP224**
	500	**NSY2SP225**
	600	**NSY2SP226**
	800	**NSY2SP228**



Trim cap

- Trim cap for external fixing panels, both side and rear.
- Material: polyamide 6.
- Finish: RAL 7035 grey.

Supply: 50 units.

Reference by unit. Order by multiples of 50 (50, 100, 150...).

Reference
NSYCSP

Composition accessories
Panels



>**Advantage:**

They prevent access by unauthorised persons; advisable for use in public spaces.

Side panels

Internal fixing

- Set of 2 side panels fixed from the inside of the enclosure, preventing access by unauthorised persons. Very useful in public spaces.
- Material: steel.
- Finish: painted with epoxy-polyester resin, textured RAL 7035 grey.

Supply: 2 side panels with internal fixing, with sealing gasket and bag of accessories.

Nominal dimensions (mm)		Reference
Height	Depth	
1200	600	**NSY2SPI126**
1800	500	**NSY2SPI185**
	600	**NSY2SPI186**
	800	**NSY2SPI188**
2000	400	**NSY2SPI204**
	500	**NSY2SPI205**
	600	**NSY2SPI206**
	800	**NSY2SPI208**
2200	600	**NSY2SPI226**
	800	**NSY2SPI228**



>**Advantage:**

Quick access to the inside of the enclosure.

Quick-fixing side panels

- Set of 2 side panels fixed to the outside of the enclosure by clipping locks.
- Material: steel.
- Finish: painted with epoxy-polyester resin, textured RAL 7035 grey.
- IP40.

Supply: 2 side panels, fixed by clips, with no sealing gasket and fixing elements.

Nominal dimensions (mm)		Reference
Height	Depth	
1200	600	**NSY2SPQ126**
	800	**NSY2SPQ128**
1400	600	**NSY2SPQ146**
	800	**NSY2SPQ148**
1600	600	**NSY2SPQ166**
	800	**NSY2SPQ168**
1800	600	**NSY2SPQ186**
	800	**NSY2SPQ188**
2000	600	**NSY2SPQ206**
	800	**NSY2SPQ208**
2200	600	**NSY2SPQ226**
	800	**NSY2SPQ228**

Composition accessories
Panels



>**Advantage:**

It prevents access by unauthorised persons; advisable for use in public spaces.

Internal fixing rear panel

- Rear panel fixed from the inside of the enclosure, preventing unauthorised personnel from accessing and removing it. Normally used in public spaces.
- Material: steel.
- Finish: painted with epoxy-polyester resin, textured RAL 7035 grey.

Supply: 1 rear panel fixed from the inside and fixing elements.

Nominal dimensions (mm)		Reference
Height	Width	
1200	600	**NSYBPI126**
1600	600	**NSYBPI166**
	800	**NSYBPI168**
1800	600	**NSYBPI186**
	800	**NSYBPI188**
	1000	**NSYBPI1810**
2000	400	**NSYBPI204**
	600	**NSYBPI206**
	800	**NSYBPI208**
	1000	**NSYBPI2010**
	1200	**NSYBPI2012**
2200	600	**NSYBPI226**
	800	**NSYBPI228**
	1000	**NSYBPI2210**

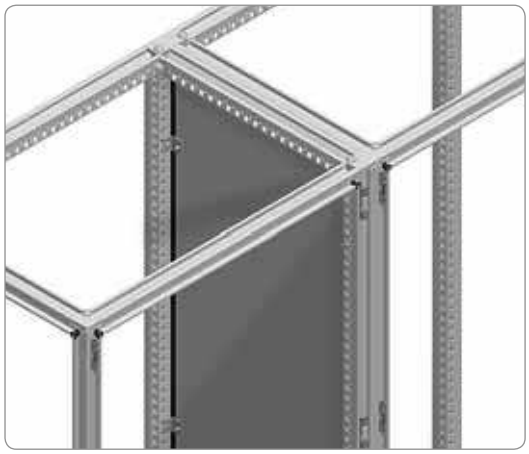

Partition panel

- Partition panel for direct fixing to the structure, guarantees a water/dustproof protection of IP10 between enclosure suites.
- Material: galvanised steel.

Supply: 1 partition panel, sealing gasket and fixing elements.

Nominal dimensions (mm)		Reference
Height	Depth	
1600	600	**NSYPPS166**
	800	**NSYPPS168**
1800	400	**NSYPPS184**
	500	**NSYPPS185**
	600	**NSYPPS186**
2000	400	**NSYPPS204**
	500	**NSYPPS205**
	600	**NSYPPS206**
	800	**NSYPPS208**
2200	600	**NSYPPS226**
	800	**NSYPPS228**

Composition accessories
Panels



Protective cover for lateral sockets

- Protective cover for sockets mounted on the modular partition panel.
- Depth of 200 mm.
- Door opening of 120°.
- Internal locking system shared with the enclosure. 5-mm double-bar flat escutcheon. Possibility of changing the flat escutcheon for the handle.
- Material: steel.
- Finish: painted with epoxy-polyester resin, textured RAL 7035 grey.

Supply: protective cover, plain cable-entry plate and fixing elements.

Nominal dimensions (mm)		Reference
Height (A)	Depth (C)	
1800	500	**NSYCPC185**
	600	**NSYCPC186**
2000	500	**NSYCPC205**
	600	**NSYCPC206**

Composition accessories
Enclosure suites

Combination examples with Spacial SF

The construction design of the enclosures is based on forming sets of enclosures. Thanks to the speed and ease with which enclosures can be coupled in the width and depth directions, and the elements created especially to facilitate joining and transporting them, we can provide the best solution for every electric installation. The connecting parts are fixed to the enclosures using self-tapping M6 screws, although if necessary they can be installed using M6 and M8 caged nuts **NSYCNFM6**, **NSYCNFM8**.

Combination examples	References
Standard + reinforced coupling kit	**NSYSFBK + NSYSFBKR**
19" + reinforced coupling kit	**NSYSFBK19 + NSYSFBKR**
External + reinforced coupling kit	**NSYSFBKE + NSYSFBKR**
External + quick coupling kit	**NSYSFBKE + NSYSFBKF**

Note: maximum load under optimum conditions. See other options in the lifting and transport table page **3/56**.

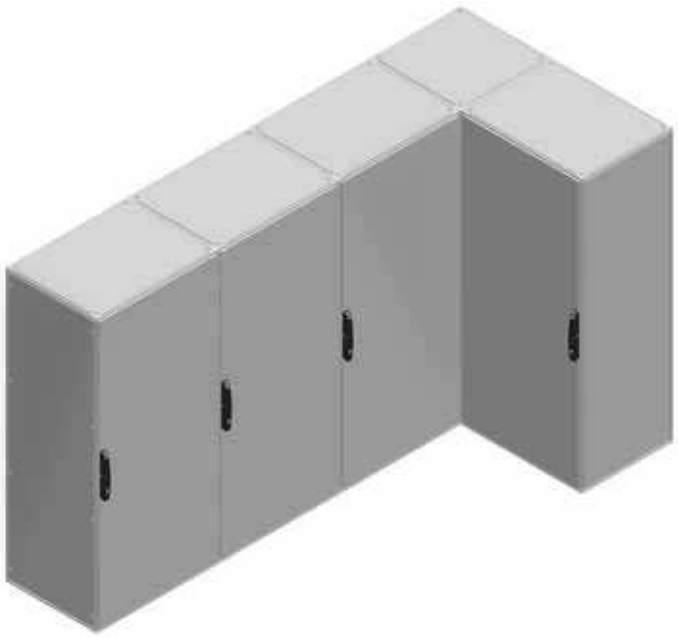

> Advantage:

Multiple assembly options, adapting to all needs.

Composition accessories
Enclosure suites



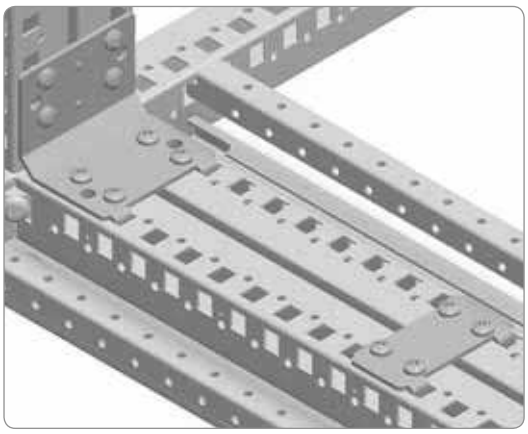

Standard coupling kit

- Used for joining enclosures side-to-side or depthwise.
- Fixing from the inside of the enclosures.
- Degree of protection: IP55.
- Material:

– Flat connectors and brackets: zinc-coated steel.
– Sealing gasket: EPDM.

Supply: 4 brackets, 2 flat connectors, sealing gasket and fixing elements.

Reference
NSYSFBK



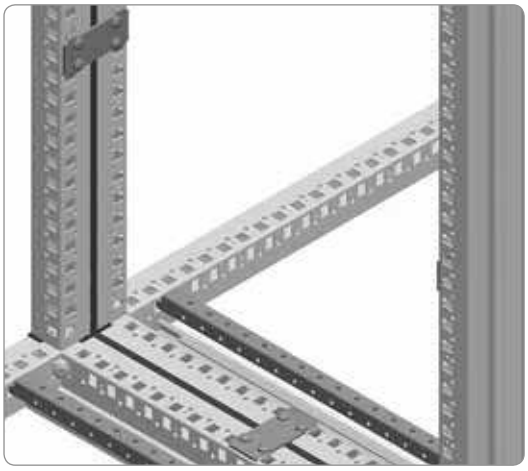

Swing 19" rack coupling kit

- Used for joining enclosures equipped with swing 19" rack, side-to-side or depthwise.
- Fixing from the inside of the enclosures.
- Degree of protection: IP55.
- Material:

– Flat connectors: zinc-coated steel.
– Sealing gasket: EPDM.

Supply: 8 flat connectors, sealing gasket and fixing elements.

Reference
NSYSFBK19

Composition accessories
Enclosure suites



Reinforced coupling

- It is used together with the **coupling kit** to reinforce the connection between 2 enclosures when they carry heavy loads.
- Fixing from the inside of the enclosures.
- Material: zinc-coated steel.

Supply: 4 reinforced connectors and fixing elements.

Reference
NSYSFBKR

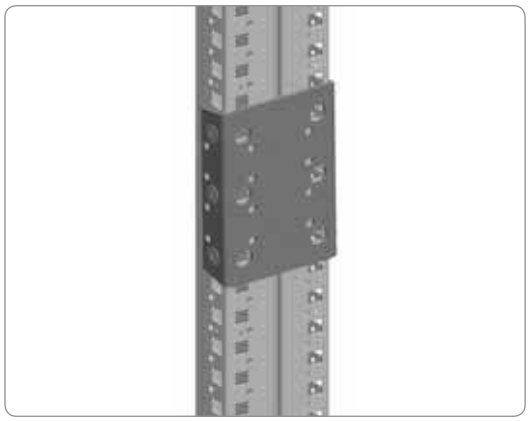



Quick coupling

- Used for quickly joining 2 enclosures.
- Fixing from the inside of the enclosures.
- Recommended for coupling enclosures in their provisional workshop location, when the required IP degree is not high.
- Degree of protection: IP40.
- Material: zinc-coated steel.

Supply: 4 flat links and fixing elements.

Reference
NSYSFBKF

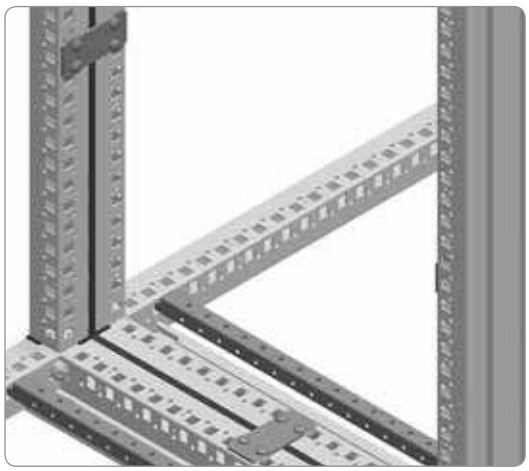

Composition accessories
Enclosure suites



Kit for coupling the previous version with Spacial SF

- It is used for coupling an enclosure of a previous version (OLN or Spacial 6000) side-to-side or depthwise with a **Spacial SF** enclosure.
- Fixing from the inside of the enclosures.
- Degree of protection: IP55.
- Material:

– Flat connectors and spacers: zinc-coated steel.
– Sealing gasket: EPDM.

Supply: 4 spacers, 4 flat connectors, sealing gasket and fixing elements.

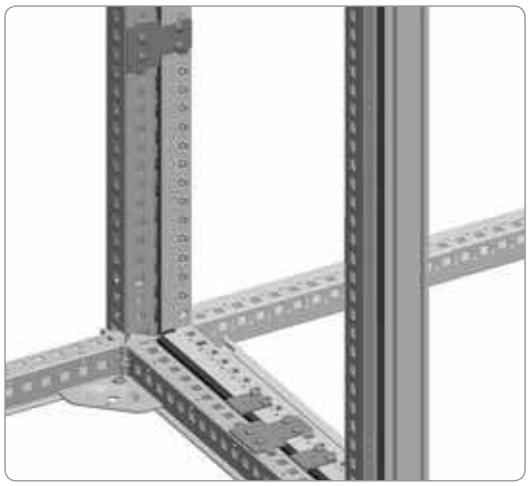

Reference
NSYSFBKSH



External coupling kit

- Allows two enclosures to be joined by their structure.
- Fixing from the outside of the enclosures.
- The mounting plate or vertical uprights fixed to the back of the enclosure prevent the assembly and dismantling of the kit.
- It can be combined with the reinforced or the quick coupling kit.
- Degree of protection: IP55.
- Material:

– External connectors: zinc-coated steel.
– Sealing gasket: EPDM.

Supply: 4 external connectors, sealing gasket and fixing elements.

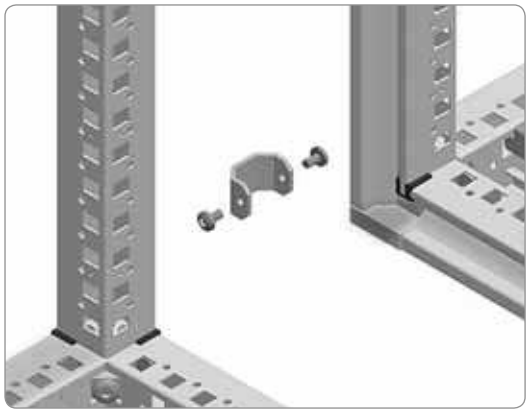

Reference
NSYSFBKE