Steel control desk enclosures



Spacial SD Steel control desk enclosures 4/2



Spacial SDF Steel control desk with console and desk 4/12

Accessories 4/14

For customised solutions









The range of Spacial SD control desks provides all the functions required of a workstation intended for industrial and infrastructure applications.

The Spacial SD range has protection ratings of IP 55 and IK 10, which guarantee the safety and the protection of the installed devices. Furthermore, the broad range of sizes meets all the installation needs for the various sizes of switchgear that an application can require.

Spacial SD offers two clearly differentiated solutions: the SD control desks with no front console and the SD F control desks with front console, all available with 4 different widths (600, 800, 1000, 1200 mm). There are two versions of the control desk without front console:

– Front accessibility: Designed for straightforward solutions.

– Front and rear accessibility through a removable panel: Enables the installation of two adjoining plates and to work at the rear.

The control desk with front console offers full accessibility, since it is fully accessible from the rear thanks to the 3-point closure door it includes.

The entire range comes in two versions, with mounting plate and without mounting plate in the bottom position of the control desk.

For Spacial SD, the accessibility which allows quick and easy work is one of its main priorities. For this reason, its design excludes the central upright.

Cable entry is optimised because all the models of the range include a cable-gland plate with two adjustable parts.

The possibility of connecting the modular control desk to the modular consoles affords multiple combinations.

The console opens easily and safely thanks to the installed pneumatic opening lid stays.

All the control desks have mounting plate supports and rails that allow the installation of all kinds of mounting plates. Adjustable with a pitch of 25 mm.

The opening direction of the door can be changed quickly thanks to the included hinges.

The console and the front panels are equipped with cut-out vertical rails to allow quick installation of all types of equipment.

Furthermore, the Spacial SD control desk is compatible with most of the accessories of the Spacial SF and SM ranges.









Stainless-steel control desk
see Spacial SDX section

Control desks
Introduction


Without mounting plate


With mounting plate

Spacial SD: Monobloc control desk without console

- This range is available in 4 widths (600, 800, 1000 and 1200 mm) with fixed rear panel. Full accessibility is provided from the front (no central upright).
- These control desks are equipped with:

– A pneumatic opening stay on the opening of the desk lid.
– A cable-gland plate in two adjustable parts for cable entry.
– Hinges with removable pins for quick door removal or reversal of opening direction.
– Two perforated vertical rails on the desk lid for quick installation of cables and cable ducts.
– RAL 7035.

Dimensions (mm)			Door number	Control desk reference	
Width (B)	Height	Depth		With mounting plate	Without mounting plate
600	1000	466	1	**NSYSD6P**	**NSYSD6**
800	1000	466	1	**NSYSD8P**	**NSYSD8**
1000	1000	466	2	**NSYSD10P**	**NSYSD10**
1200	1000	466	2	**NSYSD12P**	**NSYSD12**

Specifications

- Control desk equipped with adjustment rails with a pitch of 25 mm and brackets allowing adjustment of the mounting plate depth.
- Welded folded sheet steel, thickness 15 / 10 mm. Structured finish, epoxy-polyester powder paint, colour RAL 7035 grey.
- Protection rating IP 55. Resistance to external mechanical impacts IK 10.
- Reversible door opening to 120°. Locking by 3-mm double-bar lock (other inserts or cylinders also available, to be ordered separately, see page **4/20**).
- Desk lid equipped with a pneumatic opening stay. Opens to 75°. Perforated reinforcement rails with a pitch of 25 mm.
- Cable-gland plate with 2 adjustable parts, with polyurethane gasket.
- M8 × 18-mm earthing bolt for equipotential connection between the door and the body.
- Two versions available: with and without mounting plate.

Control desks
Dimensions

Monobloc control desks without console

1 door **2 doors**

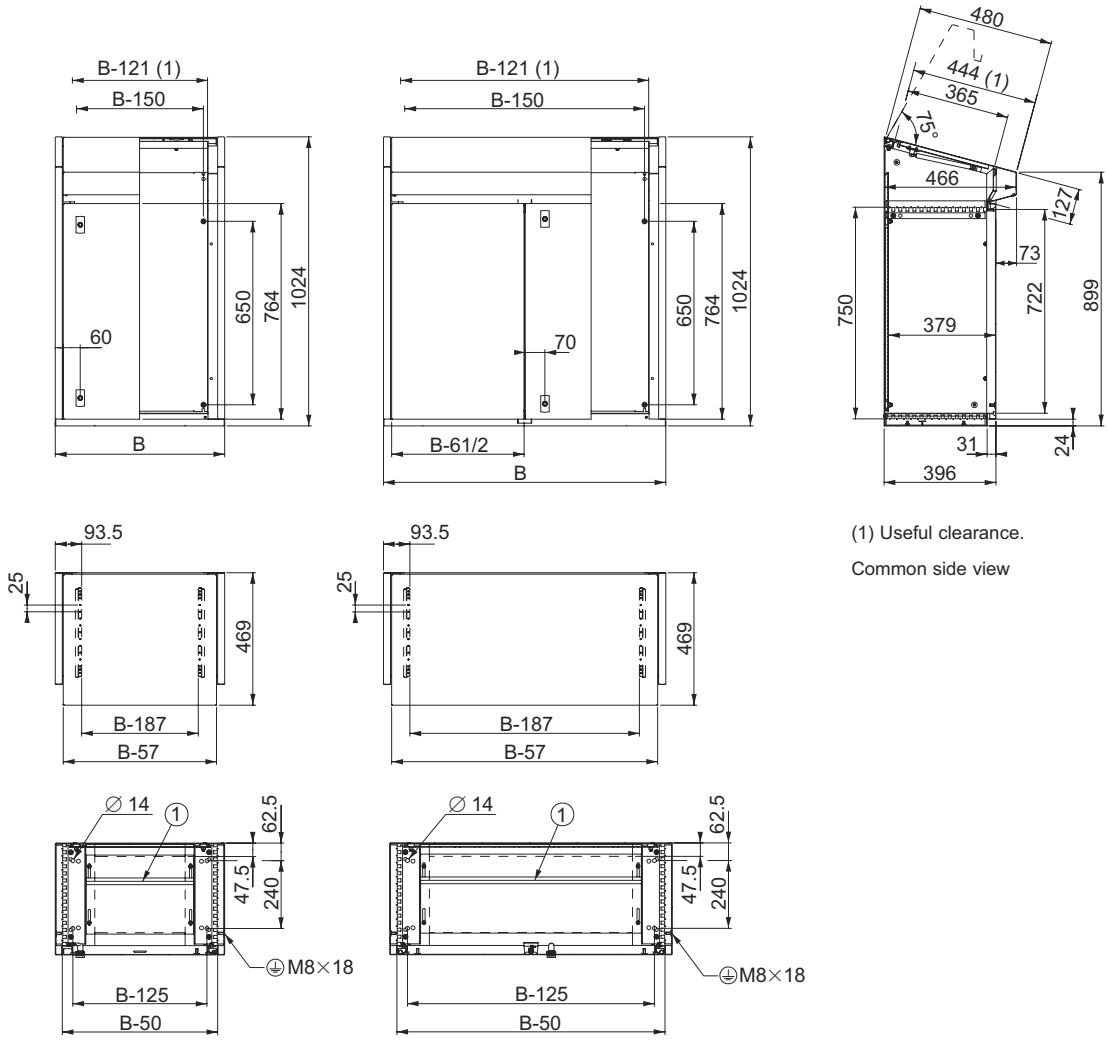

(1) Useful clearance.

Common side view

Cable-gland plate clearance dimensions (mm)	
Width	**Maximum opening**
B-280	56

Control desks
Introduction



Without mounting plate



With mounting plate



The connection of a monobloc control desk (without console and with rear panel, ref. **NSYSD6RP** to **NSYSD12RP**) to one or several modular consoles allows all possible combinations (see page **4/10**).

Spacial SD: Monobloc control desk with removable rear panel

- Control desk with rear access. The rear panel is removable.
- It is possible to install two racks back-to-back, allowing the installation of a large number of devices, while ensuring full accessibility from the front and the rear.
- At the top, these control desks are equipped with removable cable-entry plates. These plates enable the installation of one or more modular consoles (see page **4/10**).
- RAL 7035.

Dimensions (mm)			Door number	Control desk reference	
Width (B)	Height	Depth		With mounting plate	Without mounting plate
600	1000	597	1	**NSYSD6RP**	**NSYSD6R**
800	1000	597	1	**NSYSD8RP**	**NSYSD8R**
1000	1000	597	2	**NSYSD10RP**	**NSYSD10R**
1200	1000	597	2	**NSYSD12RP**	**NSYSD12R**

Specifications

- Control desk equipped with adjustment rails with a pitch of 25 mm and brackets allowing depth adjustment of the mounting plate.
- Welded folded sheet steel, thickness 15 / 10 mm. Structured finish, epoxy-polyester powder paint, colour RAL 7035 grey.
- Protection rating IP 55. Resistance to external mechanical impacts IK 10.
- Reversible door opening to 120°. Locking by 3-mm double-bar lock (other inserts or barrels also available, to be ordered separately, see page **4/20**).
- Desk lid equipped with a pneumatic opening stay. Opens to 75°. Perforated reinforcement rails with a pitch of 25 mm.
- Cable-gland plate with 2 adjustable parts, with polyurethane gasket.
- M8 × 18-mm earthing screw for equipotential connection between the door and the body.
- Two versions available: with and without mounting plate.

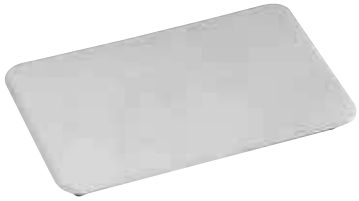

Blanking cover

Blanking cover length (mm)	Reference RAL 7035
200	**NSYRP2**
400	**NSYRP4**
600	**NSYRP6**
800	**NSYRP8**

- To conceal the free space of the control desk when the width of the console or consoles is less than the width of the control desk (see the connection examples below). In any case, it is necessary to previously remove the top plate delivered with the control desk.
- Four lengths: 200, 400, 600 and 800 mm.
- Sheet steel, thickness 15 / 10 mm.
- Structured finish, epoxy-polyester powder paint, colour RAL 7035 grey.
- Fixing by screws.

Control desks
Dimensions

Monobloc control desks with removable rear panel

1 door

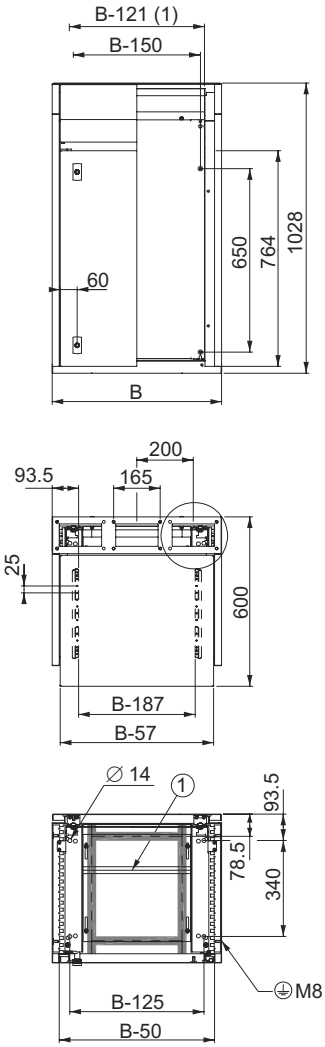

2 doors

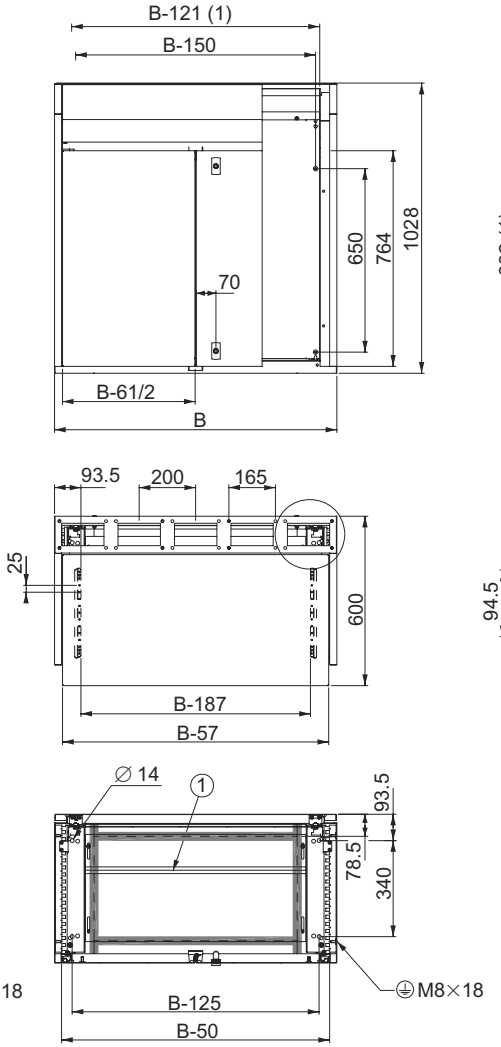

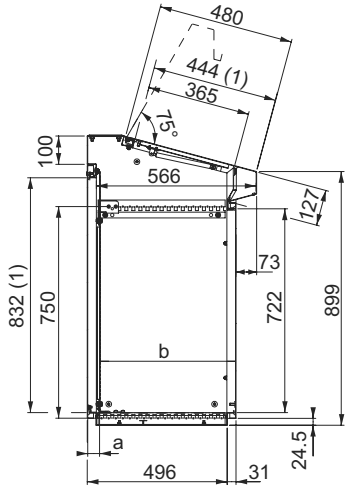

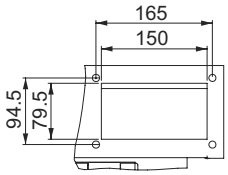

(1) Useful clearance.

Common side view

Cable-gland plate clearance dimensions (mm)	
Width	**Maximum opening**
B-280	56

Adjustment of the depth of the mounting plate (mm)		
Depth	**Min.**	**Max.**
a	42	392
b	129	479

Modular consoles
Introduction



- Two widths: 400 and 600 mm.
- Two depths: 200 and 300 mm.
- Welded folded sheet steel, thickness 15 / 10 mm. Structured finish, epoxy-polyester powder paint, colour RAL 7035 grey.
- Protection rating IP 55. Resistance to external mechanical impacts IK 10.
- Hinged modular console cover equipped with a pneumatic opening stay. Opens to 75°.
- Locking of the hinged modular console cover by two 3-mm double-bar locks (other inserts or barrels also available, to be ordered separately, see page **4/20**).
- Screw fixed rear panel equipped with step slides in the version with a depth of 300 mm.
- The link between the control desk and the modular console requires, in certain cases, the addition of one or several blanking covers (to be ordered separately).
- Optional galvanised mounting plate.

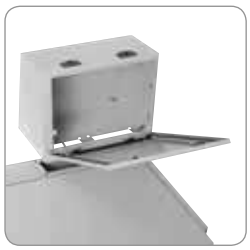

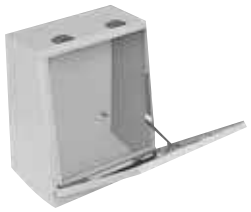

Modular console in RAL 7035 grey sheet steel

Console (mm)		Reference
Width (B)	Depth	
400	200	**NSYSDC42**
400	300	**NSYSDC43**
600	200	**NSYSDC62**
600	300	**NSYSDC63**

Plain mounting plate for modular console (F)

Console width (mm)	Fixing centre-to-centre distance (mm)		Overall surface (dm²)	Reference
	Width	Height		
400	325	325	12.77	**NSYMM44**
600	625	325	19.77	**NSYMM64**

Microperforated mounting plate for modular console (F)

Console width (mm)	Fixing centre-to-centre distance (mm)		Overall surface (dm²)	Reference
	Width	Height		
400	325	325	12.77	**NSYMF44**
600	625	325	19.77	**NSYMF64**

Telequick mounting plate for modular console (F)

Console width (mm)	Fixing centre-to-centre distance (mm)		Overall surface (dm²)	Reference
	Width	Height		
400	325	325	12.10	**NSYMR44**
600	530	325	19.48	**NSYMR64**

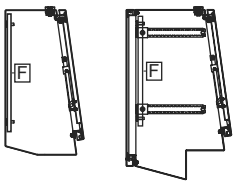

Mounting plate marked F for modular consoles with depths of 200 and 300 mm.

Modular consoles
Dimensions

Modular console, depth 200 mm

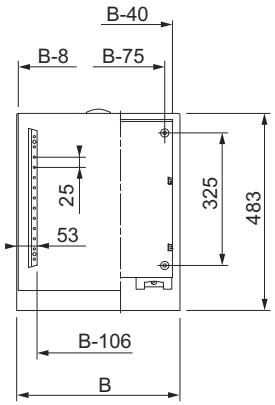

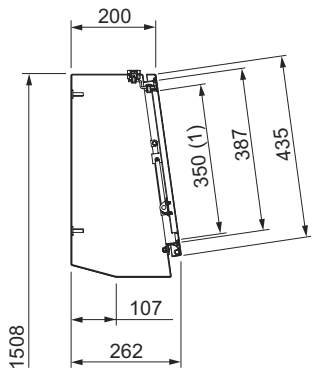

Modular console, depth 300 mm

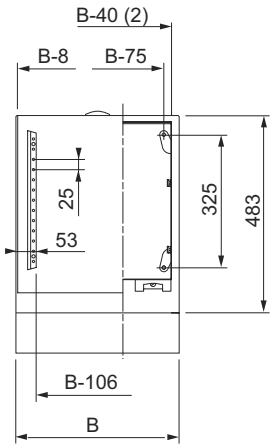

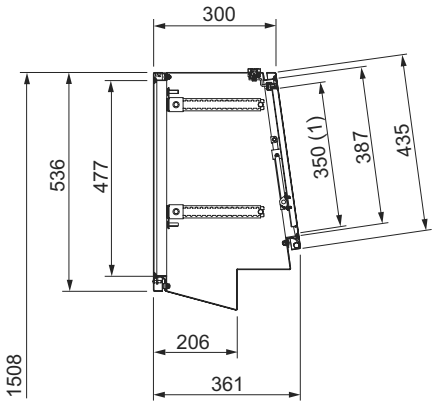

(1) Useful clearance.
(2) Same size for the rear panel.

4

Control desks
Combinations

Console and control desk combination examples

Control desk widths (mm)



Control desk ref. **NSYSD6R**

Console	Plate
NSYSDC42 / NSYSDC43	**NSYRP2**
NSYSDC62 / NSYSDC63	**–**



Control desk ref. **NSYSD8R**

Console	Plate
NSYSDC42 / NSYSDC43	**NSYRP4**
2 × **NSYSDC42 / NSYSDC43**	**–**
NSYSDC62 / NSYSDC63	**NSYRP2**



Control desk ref. **NSYSD10R**

Console	Plate
NSYSDC42 / NSYSDC43	**NSYRP6**
NSYSDC62 / NSYSDC63	**NSYRP4**
NSYSDC62 / NSYSDC63	2 × **NSYRP2**
NSYSDC42 + NSYSDC62 / NSYSDC43 + NSYSDC63	**–**



Control desk ref. **NSYSD12R**

Console	Plate
NSYSDC42 / NSYSDC43	**NSYRP8**
NSYSDC62 / NSYSDC63	**NSYRP6**
NSYSDC62 / NSYSDC63	2 × **NSYRP2 + NSYRP4**
2 × **NSYSDC62 / NSYSDC63**	**–**
NSYSDC42 + NSYSDC62 / NSYSDC43 + NSYSDC63	**NSYRP4**

Mounting accessories
Installation accessories



Mounting plate

Plain galvanized mounting plate for control desks without console, with or without removable rear panel

- Material: galvanised sheet steel with a thickness of 25 / 10 mm.
- Control desk without console with rear panel, across the entire height A. In this case, the depth can be adjusted with a pitch of 25 mm as standard.
- Control desk without console with rear panel, across the entire height A. To adjust the depth with a pitch of 25 mm, order a set of 4 adjustment rails and 4 fixing brackets (see below).

Galvanised mounting plate for control desks without console (A)

Control desk width (mm)	Fixing centre-to-centre distance (mm)		Surface (dm^2)	Reference
	Width	Height		
600	450	650	35	**NSYPMP8560**
800	650	650	49	**NSYPMP8580**
1000	850	650	63	**NSYPMP85100**
1200	1050	650	77	**NSYPMP85120**

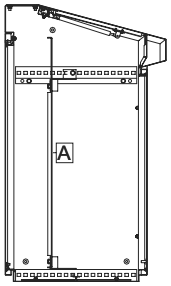

Control desks
Introduction









Spacial SD: Control desk with console and desk

- With a height of 1400 mm, these control desks are available in four widths (800, 1000, 1200 and 1600 mm) and two depths (400 and 600 mm).
- To guarantee full access to the equipment, these control desks are equipped with:
– One or two rear doors covering the entire height of the control desk.
– One or two front doors in the lower part.
– A hinged desk lid held in open position by a pneumatic opening stay.
– A front console door held by a mechanical stay.
– A cable-gland plate in two adjustable parts for the cable entry.
– Hinges allowing the opening direction of the doors to be changed, as well as their quick removal.
– Two perforated vertical rails on the desk lid for quick installation of cables and cable ducts.
- In the version with a depth of 600 mm, the console can support the installation of a 14" screen with an optional PC support plate.

Specifications

- Welded folded sheet steel, thickness 15 / 10 mm. Structured finish, epoxy-polyester powder paint, colour RAL 7035 grey.
- Protection rating IP 55. Resistance to external mechanical impacts IK 10.
- Reversible front door opening to 120° with a 3-mm double-bar insert.
- Rear door equipped with a three-point lock, activated by a linkage, with a 5-mm double-bar insert.
- Desk lid equipped with a pneumatic opening stay. Opens to 75°. Perforated reinforcement rails with a pitch of 25 mm.
- Hinged console cover equipped with a pneumatic opening stay. Opens to 75°.
- Locking of the doors, the top lid and the hinged console cover by a 3-mm double-bar lock (other inserts or barrels also available, to be ordered separately, see page **4/20**).
- Control desk equipped with adjustment rails with a pitch of 25 mm and brackets allowing adjustment of the mounting plate depth in the lower part of the control desk. The control desk can be equipped across its entire height and / or in the upper part by separately ordering a set of rails and brackets.
- Cable-gland plate with 2 adjustable parts, with polyurethane gasket.
- M8 × 18-mm earthing bolt for equipotential connection between the door and the body.
- Optional plinth.

Control desk with RAL 7035 grey console

Control desk with console (mm)			Control desk reference	
Width (B)	Height	Depth	With mounting plate	Without mounting plate
800	1400	845	**NSYSDF88**	**NSYSDF88P**
1000	1400	845	**NSYSDF108**	**NSYSDF108P**
1200	1400	845	**NSYSDF128**	**NSYSDF128P**
1600	1400	845	**NSYSDF168**	**NSYSDF168P**
800	1400	1045	**NSYSDF810**	**NSYSDF810P**
1000	1400	1045	**NSYSDF1010**	**NSYSDF1010P**
1200	1400	1045	**NSYSDF1210**	**NSYSDF1210P**
1600	1400	1045	**NSYSDF1610**	**NSYSDF1610P**

Control desks
Dimensions

Monobloc control desks with console and desk

1 door

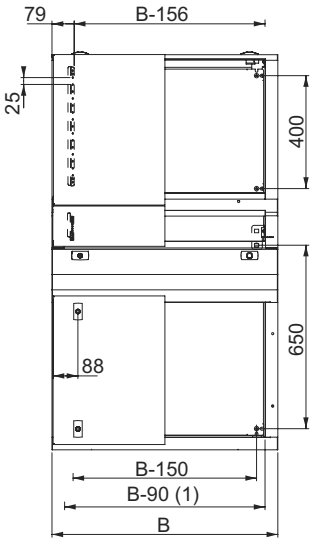

2 doors

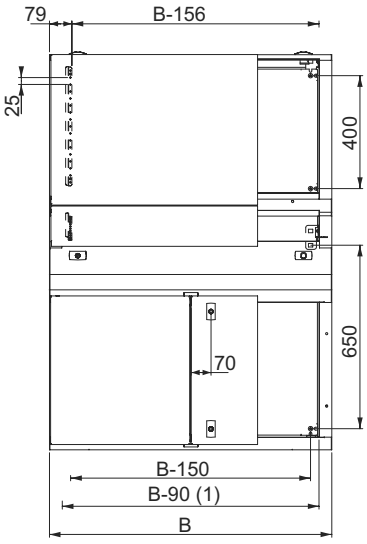

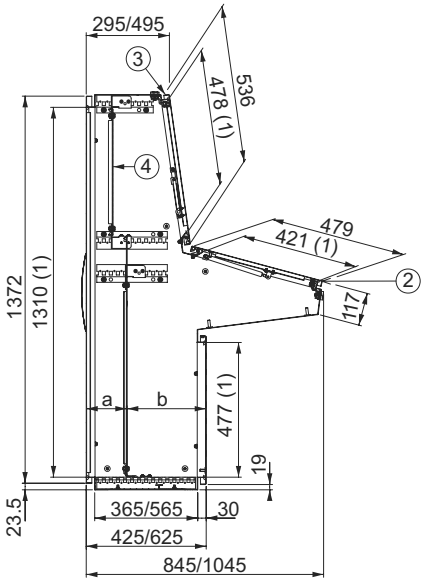

(1) Useful clearance.

Common side view

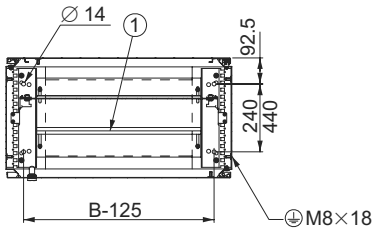

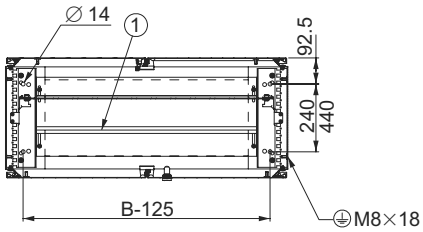

Key	
①	Cable-gland plate, max. opening: 56 mm
②	Maximum opening of the lid: 75°
③	Maximum opening of the hinged cover: 75°
④	Optional console mounting plate

Cable-gland plate clearance dimensions (mm)	
Width	**Maximum opening**
B-280	56

Depth adjustment of the mounting plate (mm)		
Depth	**Min.**	**Max.**
a (2)	40	216 / 416 (3)
b (2)	203	378 / 578 (3)

(2) For 2-door control desks:
– a + 25 mm,
– b – 25 mm.
(3) According to control desk depth.

Mounting accessories
Installation accessories



Mounting plate

Installation possibilities of the mounting plate in control desks

- Material: galvanised sheet steel with a thickness of 25 / 10 mm.
- Control desks with console:
– In the upper part: B (1).
– In the lower part: C.
– Across the entire height: D (1).
– In the desk: E.

(1) For this installation, order a set of 4 adjustment rails and 4 fixing brackets (see below).

- Equipped with adjustment rails, these control desks can accommodate several mounting plate combinations:
– Either one mounting plate across the entire height, or two mounting plates back-to-back in the lower part and one mounting plate in the upper part.
– One mounting plate on the base of the console.

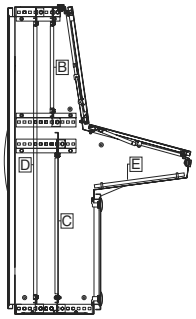

Marks B, C, D, E according to the installation position of the mounting plate in the control desks



Mounting plate for control desks with console (B)

Control desk width (mm)	Fixing centre-to-centre distance (mm)		Surface (dm^2)	Plate reference
	Width	Height		
800	650	400	31	**NSYPMP4580**
1000	850	400	40	**NSYPMP45100**
1200	1050	400	77	**NSYPMP45120**
1600	1450	400	67	**NSYPMP45160**

Mounting plate for control desks with console (C)

Control desk width (mm)	Fixing centre-to-centre distance (mm)		Surface (dm^2)	Plate reference
	Width	Height		
800	650	650	49	**NSYPMP8580**
1000	850	650	63	**NSYPMP85100**
1200	1050	650	77	**NSYPMP85120**
1600	1450	650	105	**NSYPMP85160**

Mounting accessories
Installation accessories

Mounting plate for control desks with console (D)

Control desk width (mm)	Fixing centre-to-centre distance (mm)		Surface (dm^2)	Plate reference
	Width	Height		
800	650	1250	90	**NSYMP148**
1000	850	1250	116	**NSYMP1410**
1200	1050	1250	142	**NSYMP1412**

Mounting plate for control desks with console (E)

Control desk width (mm)	Fixing centre-to-centre distance (mm)		Surface (dm^2)	Plate reference
	Width	Height		
800	650	350	28	**NSYSPMP4080**
1000	850	350	36	**NSYSPMP40100**
1200	1050	350	44	**NSYSPMP40120**
1600	1450	350	60	**NSYSPMP40160**



Telequick mounting plate

- Allows the installation of any device without drilling or boring.
- Use M3-M6 clip nuts to fix the switchgear.
- Material: Steel with a thickness of 20/10 mm.
- Control desks with console:

– In the upper part: B (1).
– In the lower part: C.
– Across the entire height: D (2).

(1) For this installation, order a set of 4 adjustment rails and 4 fixing brackets.
(2) For this installation, order a set of 2 uprights ref. **NSYTVR14** and set of 4 adjustment rails and 4 fixing brackets.

Control desk width (mm)	Telequick mounting plate for control desk with position A and C			Reference
	Fixing centre-to-centre distance (mm)		Surface (dm^2)	
	Width	Height		
600	450	650	34	**NSYTMP6760** *
800	650	650	48	**NSYTMP6780**
1000	850	650	61	**NSYTMP67100**
1200	1050	650	75	**NSYTMP67120**

*Available only for position A.

Control desk width (mm)	Telequick mounting plate for control desk with position B			Reference
	Fixing centre-to-centre distance (mm)		Surface (dm^2)	
	Width	Height		
800	650	400	30	**NSYTMP4280**
1000	850	400	39	**NSYTMP42100**
1200	850	400	39	**NSYTMP42120**

Control desk width (mm)	Telequick mounting plate for control desk with position D				Reference
	Fixing centre-to-centre distance (mm)		Surface (dm^2)	Overall surface (dm^2)	
	Width	Height			
800	650	575	42	84.96	2 × **NSYSTMP6080**
1000	850	575	54	108.96	2 × **NSYSTMP60100**
1200	1050	575	66	132.96	2 × **NSYSTMP60120**

Mounting accessories
Installation accessories



Fixing brackets

- Set of f 4 fixing brackets.
- Depth adjustment on 25 mm pitch.
- Included as standard with desk (all versions).
- Material: 4 mm thick galvanised steel.
- Maximum load: 250 Kg.
- To be ordered separately when required for installation of two back to back mounting plates in control desks with rear access.

For desk width	Reference
600 -1600	**NSYMPBSD**



Adjustment rails and fixing brackets

- Set of 4 rails and 4 fixing brackets.
- To install a plain mounting plate or a Telequick mounting plate, either at the top or across the height of the monobloc control desk with console.
- For positioning 2 plates (back to back), order fixing brackets ref. **NSYMPBSD**.

For control desks with console depth (mm)	Reference
400	**NSYMPB4SD**
600	**NSYMPB4SD**

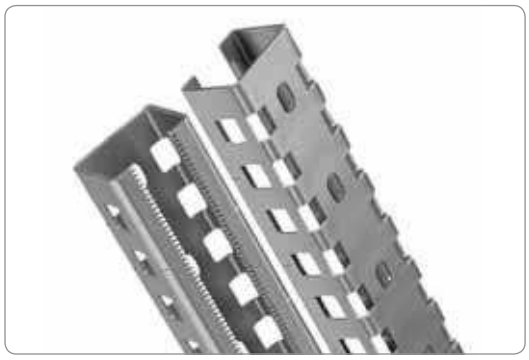

Technical uprights

- Set of 2 equipment uprights.
- Support for fixing Telequick mounting plates and rails.
- Material: Zink coated with a thickness of 20/10 mm.

For control desk height (mm)	Centre-to-centre distance (mm)	Reference
1000	650	**NSYTVR10**
1400	1250	**NSYTVR14**

Composition accessories
Floor accessories

Plinth

- See composition accessories: floor, page **3/36**.
- Models with heights: 100 and 200 mm.

Front plinth

- Supply:
– Height 100 mm: 4 corner pieces, 2 panels (front and rear), 4 corner covers and fixing elements.
– Height 200 mm: 4 corner pieces, 4 panels (2 front and 2 rear), 4 corner covers and fixing elements.

Plinth side panels

- Supply:
– Height 100 mm: 2 side panels, 4 corner covers and fixing elements.
– Height 200 mm: 4 side panels (with a height of 100 mm, 2 for each side), 4 corner covers and fixing elements.












Desk				Front console desk		Plinths			
Monobloc		Removable rear panel		With rear door		Height 100 (mm)		Height 200 (mm)	
With out mounting plate	With mounting plate	With out mounting plate	With mounting plate	With out mounting plate	With mounting plate	Kit front/back panel	Side panel	Kit front/back panel	Side panel
NSYSD6	NSYSD6P	-	-	-	-	NSYSPF6100	NSYSPS4100SD	NSYSPF6200	NSYSPS4200SD
NSYSD8	NSYSD8P	-	-	-	-	NSYSPF8100	NSYSPS4100SD	NSYSPF8200	NSYSPS4200SD
NSYSD10	NSYSD10P	-	-	-	-	NSYSPF10100	NSYSPS4100SD	NSYSPF10200	NSYSPS4200SD
NSYSD12	NSYSD12P	-	-	-	-	NSYSPF12100	NSYSPS4100SD	NSYSPF12200	NSYSPS4200SD
-	-	NSYSD6R	NSYSD6RP	-	-	NSYSPF6100	NSYSPS5100SD	NSYSPF6200	NSYSPS5200SD
-	-	NSYSD8R	NSYSD8RP	-	-	NSYSPF8100	NSYSPS5100SD	NSYSPF8200	NSYSPS5200SD
-	-	NSYSD10R	NSYSD10RP	-	-	NSYSPF10100	NSYSPS5100SD	NSYSPF10200	NSYSPS5200SD
-	-	NSYSD12R	NSYSD12RP	-	-	NSYSPF12100	NSYSPS5100SD	NSYSPF12200	NSYSPS5200SD
-	-	-	-	NSYSDF88	NSYSDF88P	NSYSPF8100	NSYSPS4100SD	NSYSPF8200	NSYSPS4200SD
-	-	-	-	NSYSDF108	NSYSDF108P	NSYSPF10100	NSYSPS4100SD	NSYSPF10200	NSYSPS4200SD
-	-	-	-	NSYSDF128	NSYSDF128P	NSYSPF12100	NSYSPS4100SD	NSYSPF12200	NSYSPS4200SD
-	-	-	-	NSYSDF168	NSYSDF168P	NSYSPF16100	NSYSPS4100SD	NSYSPF16200	NSYSPS4200SD
-	-	-	-	NSYSDF810	NSYSDF810P	NSYSPF8100	NSYSPS6100SD	NSYSPF8200	NSYSPS6200SD
-	-	-	-	NSYSDF1010	NSYSDF1010P	NSYSPF10100	NSYSPS6100SD	NSYSPF10200	NSYSPS6200SD
-	-	-	-	NSYSDF1210	NSYSDF1210P	NSYSPF12100	NSYSPS6100SD	NSYSPF12200	NSYSPS6200SD
-	-	-	-	NSYSDF1610	NSYSDF11010P	NSYSPF16100	NSYSPS6100SD	NSYSPF16200	NSYSPS6200SD

Composition accessories



Pneumatic opening stay

- Holds the desk lid in open position at an angle of 75°.
- Delivered with fixings.

Nominal load per stay (N)	Stay reference
244	**NSYPLS24**
300	**NSYPLS30**

- The stays are delivered as standard with the control desks, according to the following table:

Max. load on lid (kg)	Control desk reference	Standard supply stay
13	**NSYSD6** and **NSYSD6R**	**NSYPLS24**
13	**NSYSD8** and **NSYSD8R**	**NSYPLS24**
17	**NSYSD10** and **NSYSD10R**	**NSYPLS30**
15	**NSYSD12** and **NSYSD12R**	**NSYPLS30**
13	**NSYSDF88** and **NSYSDF810**	**NSYPLS24**
17	**NSYSDF108** and **NSYSDF1010**	**NSYPLS30**
15	**NSYSDF128** and **NSYSDF1210**	**NSYPLS30**
11	**NSYSDF168** and **NSYSDF1610**	**NSYPLS30**



Document lip

- Retaining bar to be fixed on the front of the inclined control desk lid. Prevents documents and equipment from falling.
- Material: PVC, RAL 7011 grey.
- Fixing by adhesive.
- Only for control desks without console.

Control desk width (mm)	Reference
600	**NSYDL6**
800	**NSYDL8**
1000	**NSYDL10**
1200	**NSYDL12**
1600	**NSYDL16**

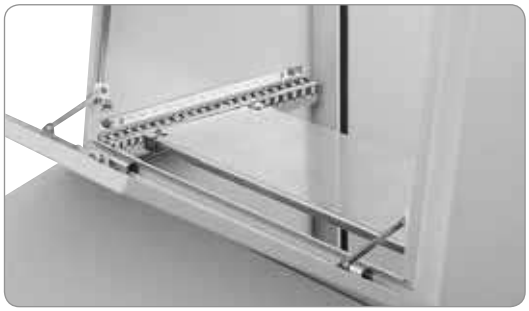

PC screen support

- For a control desk with monobloc console with a depth of 600 mm.
- This support is a galvanised mounting plate, in horizontal position, fixed to the adjustment rails of the console.
- Maximum acceptable load: 50 kg/m^2.
- Delivered with fixings.

For width (mm)	Reference
800	**NSYPCS8**
1000	**NSYPCS10**
1000	**NSYPCS12**
1200	**NSYPCS16**

Composition accessories
Locking system



Locks without handle

- Polyamide PA 6 material charged with 30% fibreglass.
- RAL 7011 grey.
- Fire resistance: 650°.
- Resistance to external mechanical impacts: IK 10.
- Insert breakage torque: 15 daN.
- Delivered with fixings, with no insert.



NSYML405SD

Shape inserts (without small escutcheon)

Description	Reference
8-mm triangular insert	**NSYTT8CRN**
8-mm male square insert	**NSYTC6CRN**
7-mm male square insert	**NSYTC7CRN**

(1) Insert installed as standard.

Cylindrical barrels (with small escutcheon)

Description	Reference
405 E key	**NSYML405SD**

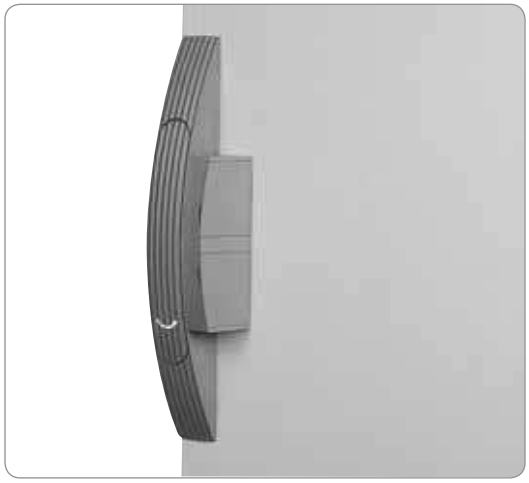

Pivoting handle

Rear door lock

- To be installed on the rear door.
- Ergonomic locking system with pivoting handle (delivered without insert).
- Broad range of inserts for covering the greatest variety of needs (shape inserts, DIN cylinders, KABA, ASSA).
- Changing the opening direction to right / left thanks to the symmetric design of the lock unit (no linkages to be removed). Lock unit supported by 2 screws.
- Option:

– Handle for use with padlock, delivered with push-button mounted as standard. All the options are compatible with the basic system delivered with the control desk.

- Please contact us for other options.

Handle

Description	Reference
Spare standard handle	**NSYSDH**

Technical features

- Material: PA 6 charged with 30% fibreglass.
- Colour RAL 7011 grey.
- Fire resistance: 650°.
- Resistance to external mechanical impacts: IK 10.

Composition accessories
Locking system

Shape inserts and cylindrical barrels

Shape inserts		Reference
	6-mm square insert	**NSYINS61**
	6-mm female square insert	**NSYINS6G1**
	7-mm square insert	**NSYINS71**
	8-mm square insert	**NSYINS81**
	8-mm female square insert	**NSYINS8G1**
	8-mm square insert with slot	**NSYINS8H1**
	6.5-mm triangular insert	**NSYINT61**
	7-mm triangular insert	**NSYINT71**
	8-mm triangular insert	**NSYINT81**
	9-mm triangular insert	**NSYINT91**
	10-mm triangular insert	**NSYINT101**
	10-mm keyless hexagonal insert	**NSYINH31**
	3-mm double-bar insert	**NSYINDB31**
	5-mm double-bar insert	**NSYINDB51**
	Daimler Benz insert	**NSYINBENZ1**
	Fiat insert	**NSYINFIAT1**
	USA keyless slot insert	**NSYINUSA1**
	2 x 4 keyless slot insert	**NSYIN241**
	Crown insert	**NSYINCW1**

Push button		Reference
	Push button	**NSYINPULSD**

Cylindrical barrels		Reference
	Lock with 405E key	**NSYIN405E1**
	Lock with 421E key	**NSYIN421E1**
	Lock with 455 key	**NSYIN4551**
	Lock with 1242E key	**NSYIN1242E1**
	Lock with 1332E key	**NSYIN1332E1**
	Lock with 2124E key	**NSYIN2124E1**
	Lock with 2131A key	**NSYIN2131A1**
	Lock with 2132A key	**NSYIN2132A1**
	Lock with 2331A key	**NSYIN2331A1**
	Lock with 2433A key	**NSYIN2433A1**
	Lock with 2452E key	**NSYIN2452E1**
	Lock with 3113A key	**NSYIN3113A1**
	Lock with 3122E key	**NSYIN3122E1**
	Lock with 3123A key	**NSYIN3123A1**
	Lock with 3133A key	**NSYIN3133A1**
	Lock with 3422E key	**NSYIN3422E1**
	Lock with 3432E key	**NSYIN3432E1**
	Lock with EDF1300 key	**NSYINF1301**
	Lock with EDF1400 key	**NSYINF1401**
	Michelin 8079 keyless lock	**NSYINICHEL8791**
	Michelin 8133 keyless lock	**NSYINICHEL8131**
	Michelin 8376 keyless lock	**NSYINICHEL8371**
	E1 keyless lock	**NSYINE11**

Cabling for your equipment
Several solutions



Plain mounting plate

- For repetitive equipment.
- To install equipment fixed by screws, with drill holes made by the customer.
- Addition of rails for clip in equipment.

Telequick mounting plate

- For repetitive equipment.
- For easy installation of equipment fixed by screws, without drilling.
- Addition of rails for clip in equipment.
- Upgradeable solution, during or after manufacturing the equipment.

Mixed mounting plate

- Solution supporting plain and Telequick mounting plates and DIN rails chassis.
- Flexibility of use: allows the installation of screw-on and clip in devices.
- Upgradeable solution, during or after manufacturing the equipment.
- Power cable can be installed at the rear.
- Option of having equipment on the front and rear.

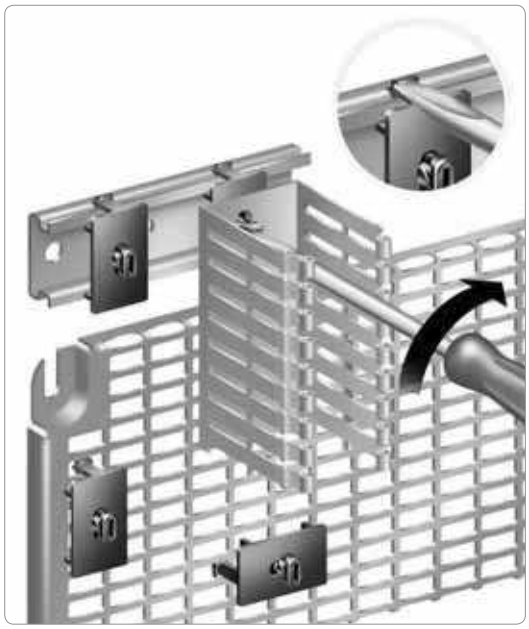

Clip in installation of the plastic leg. Easy quarter-turn installation of the cable duct. Removal possible thanks to the lug (magnifying glass).

Implementation

- Ten sizes of cable ducts with dedicated accessories.
- Cable duct sizes optimised for maximum wire capacity.
- Easy implementation:

– Snap-off tongues for the cable entries,
– Fixing with 4 dedicated accessories as required, by screws, by clipping in, for fixing to the door, for fixing to the mounting plate.

- Important: no metal parts may remain inside the cable ducts (respect for electrical insulation).