Spacial steel enclosure application offer

Offers dimensioned for your applications



Spacial S57: the universal steel enclosure with screw-on cover

Practical

Vertical and horizontal installations. Body without cut-outs for cable-gland plate. Screw-on cover. 4 dimensions with screw-on cover from 200 × 300 × 150 to 300 × 500 × 200. Delivered empty. Do you need other dimensions? Please consult our specific service.



Spacial S3DB: the junction enclosure with drop door for easier access

Smart

Vertical and horizontal installations. Body without cut-outs for cable-gland plates. 180° hinges.
11 dimensions with drop door from H250 × W300 × D150 to H250 × W400 × D150.
Reversible enclosure (the height becomes the width).
Delivered empty.
Model presented with ladder support and DIN rail (to be ordered separately, see page **7/50**).



Spacial S3DM: the enclosure for modular distribution applications

Practical

Body with top and bottom cable-gland plates.
8 dimensions with cable-gland plate and glazed door.
Delivered empty.
Model presented with modular chassis (to be ordered separately, see page **2/42**).



Spacial VDM: the sealed 19" enclosure for local networks and electronics in industrial environments

Functional

Built-in 19" uprights
8 dimensions with 2 versions: single and double body.
The VDM models are equipped with 19" uprights.



Spacial S3CM: the Control and Human-Machine Dialogue enclosure, ideal for all your interfaces

Ergonomic

The rail of the frame guarantees good rigidity for the enclosure.
8 dimensions.
Rotation through 170º; complete range of joints, fixed or rotating.

Selection guide for application wall-mounting enclosures



Specifications					Basic enclosures					
					Empty application enclosures					
Dimensions			Nº of doors	IP	Steel industrial boxes, IP 66 Spacial S57	S3DB terminal enclosures (1)	FL terminal enclosures (1)	S3DM modular enclosures with glazed door (1)	VDM steel enclosures with 19″ swing rack	
H	W	D			Page 1/6	Page 2/38	Page 2/40	Page 2/42	Page 2/44	
200	300	150	1	66	**NSYSBS302015**					
250	300	150	1	66		**NSYS3DB25315**				
250	400	150	1	66		**NSYS3DB25415**				
250	500	150	1	66		**NSYS3DB25515**				
300	300	150	1	66	**NSYSBS303015**	**NSYS3DB3315**				
300	300	170	1	66			**NSYS3DBFL3317**			
300	400	150	1	66	**NSYSBS403015**	**NSYS3DB3415**				
300	400	170	1	66			**NSYS3DBFL3417**			
300	500	150	1	66		**NSYS3DB3515**				
300	500	200	1	66	**NSYSBS503020**					
300	600	150	1	66		**NSYS3DB3615**				
300	600	400	1	66					**NSYVDM4U4P**	
300	600	500	1	66						
400	300	150	1	66		**NSYS3DB4315**		**NSYS3DM4315T**		
400	300	170	1	66			**NSYS3DBFL4317**			
400	600	400	1	66					**NSYVDM7U4P**	
400	600	500	1	66						
400	800	150	1	66		**NSYS3DB4815**				
500	400	150	1	66		**NSYS3DB5415**		**NSYS3DM5415T**		
500	600	400	1	66					**NSYVDM9U4P**	
500	600	500	1	66						
600	400	150	1	66		**NSYS3DB6415**		**NSYS3DM6415T**		
600	600	150	1	66				**NSYS3DM6615T**		
700	500	150	1	66						
700	500	150	1	66				**NSYS3DM7515T**		
700	600	400	1	66					**NSYVDM13U4P**	
700	600	500	1	66						
800	600	150	1	66						
800	600	150	1	66				**NSYS3DM8615T**		
800	600	400	1	66					**NSYVDM16U4P**	
800	600	500	1	66						
1000	600	150	1	66				**NSYS3DM10615T**		
1000	800	150	1	66				**NSYS3DM10815T**		

(1) Empty enclosure.



Wall-fixing brackets

Steel: **NSYAEFPFSC**

Stainless steel: **NSYAEFPFXSC**

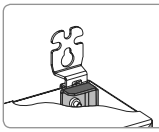

Reinforcement for heavy loads

NSYAEFAHLBSC



Cable gland

Page **7/104**

Specific

Do you need other dimensions? Do you require a special colour or cut-outs? All these enclosures can be customised. See our specific offer, page 0/10.

Schneider Electric











						Accessories					
19″ enclosure with glazed door (2)						Electricity distribution		Automatism			
	Number of U	1-body 19″ fixed rack	Number of U	2 parts with 19″ fixed rack	Number of U	Modular mounting plate	Nº of modules	DIN rail support and DIN rail	Plain mounting plate	Telequick mounting plate	Aluminium vertical rails
		Page 2/44		Page 2/44		Page 7/70			Page 7/2	Page 7/4	Page 7/8
								NSYAMRD2030	NSYMM32		
								NSYAMRD2530	NSYMM3025		
								NSYAMRD2540	NSYMM2540		
								NSYAMRD2550	NSYMM2550		
								NSYAMRD3030	NSYMM33	NSYMR33	NSYMDVR3
								NSYAMRD3030	NSYMM33	NSYMR33	
								NSYAMRD3040	NSYMM43	NSYMR34	NSYMDVR3
								NSYAMRD3040	NSYMM43	NSYMR34	
								NSYAMRD3050	NSYMM53		NSYMDVR3
								NSYAMRD3050	NSYMM53		NSYMDVR3
								NSYAMRD36	NSYMM36		NSYMDVR3
	4	NSYVDM5U4F	5	NSYVD2M5U4	5			NSYAMRD36	NSYMM36		NSYMDVR3
				NSYVD2M5U5	5			NSYAMRD36	NSYMM36		NSYMDVR3
						NSYDLM24	24	NSYAMRD43	NSYMM43	NSYMR43	NSYMDVR4
								NSYAMRD43	NSYMM43	NSYMR43	
	7	NSYVDM8U4F	8	NSYVD2M8U4	8				NSYMM64	NSYMR46	NSYMDVR4
				NSYVD2M8U5	8			NSYAMRD48	NSYMM64	NSYMR46	NSYMDVR4
								NSYAMRD54	NSYMM48		NSYMDVR4
						NSYDLM48	48		NSYMM54	NSYMR54	NSYMDVR5
	9	NSYVDM10U4F	10	NSYVD2M10U4	10				NSYMM65		NSYMDVR5
				NSYVD2M10U5	10				NSYMM65		NSYMDVR5
						NSYDLM48P	48	NSYAMRD64	NSYMM64	NSYMR64	NSYMDVR6
						NSYDLM84	84		NSYMM66	NSYMR66	NSYMDVR6
						NSYDLM66	66		NSYMM75	NSYMR75	NSYMDVR7
						NSYDLM88	88		NSYMM75	NSYMR75	NSYMDVR7
	13	NSYVDM14U4F	14	NSYVD2M14U4	14						NSYMDVR7
				NSYVD2M14U5	14						NSYMDVR7
						NSYDLM84P			NSYMM86	NSYMR86	NSYMDVR8
						NSYDLM112			NSYMM86	NSYMR86	NSYMDVR8
	16	NSYVDM17U4F	17	NSYVD2M17U4	17				NSYMM86	NSYMR86	NSYMDVR8
				NSYVD2M17U5	17				NSYMM86	NSYMR86	NSYMDVR8
						NSYDLM168			NSYMM106	NSYMR106	NSYMDVR10
						NSYDLM240			NSYMM108	NSYMR108	NSYMDVR10

(2) Plain door, please consult us.

The ideal junction enclosure for your application
Introduction



Vertical position.



Horizontal position.

Terminal enclosure with a depth of 150 mm, from H 250 × W 300 to H 600 × W 400 mm with plain door, for equipping with terminals. The body does not have any cable-gland openings.
11 references.
Selection guide, page **2/36**.

Technical characteristics

- Protection degree: IP 66.
- Resistance to external mechanical impacts: IK 10.
- Structured finish, epoxy-polyester powder, RAL 7035 grey colour.

Body
Single-piece body, folded and welded. Front rail with double sheet thickness, gutter-shaped.
- Depth 150 mm.

The terminal enclosure can be installed vertically (the width becomes the height).
- Wall mounting directly or by means of fixing lugs (to be ordered separately).
- 4 M8 × 25 shouldered backstuds.
- Body without cable-gland openings.

Door
- Easily removable and reversible door, with 20-mm return with double sheet thickness granting excellent rigidity; equipped with 2 hinges opening to 180º.
- Door opening to more than 180° for maximum accessibility (the door comes to rest on the body of the enclosure in top position).
- Maximum acceptable load on the door: 20 kg/m^2.
- Wall-mounting enclosure supplied with 3-mm double-bar lock as standard.
- Polyurethane gasket.
- M6 × 16 earthing screw for equipotential connection between the door and the body of the enclosure.

Dedicated accessories
The terminal enclosure, with a depth of 150 mm, can be equipped:
- With 2 rails to be installed on the 4 M8 × 25 shouldered backstuds.
- With a symmetrical rail to be installed on the rails.
- With a 6-mm^2 earth braid to be placed between the body and the door.
- See page **2/18**.

It can also be equipped with a plain mounting plate, see page **7/2**.
This range is completed by the Spacial offer with screw-on cover, see page **1/6**.



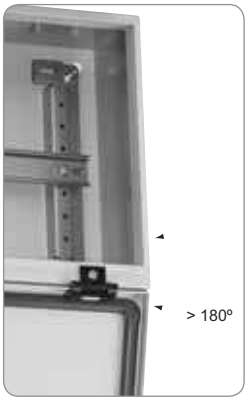

Example of installation with the ladder mounting plate.



Specific

On demand, it is possible to install the same enclosure dimension with a door with standard opening (not drop-leaf). Please consult our specific service.

See also the accessories

Fixing lugs for the earthing strip page **7/141**

Cable-gland entries without connectors page **7/106**

Viewing window page **7/135**

Dimensions

A: Enclosure height
B: Enclosure width
C: Enclosure depth

(1) With ladder mounting plate installed.
(2) M6 × 17.5 mm earthing stud.
(3) Stud centre-to-centre distance.
(4) Centre-to-centre distance of the holes for direct fixing.
(5) Drop-leaf door.

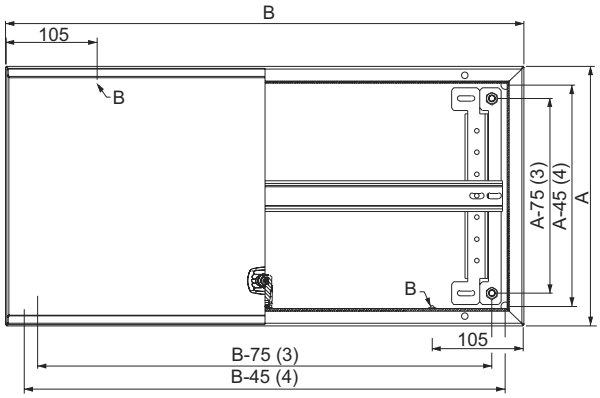

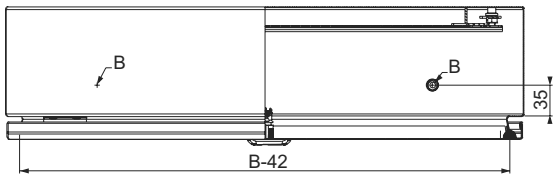

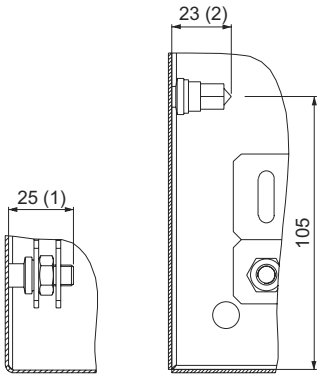

The provided dimensions are with the ladder mounting plate, which is the most commonly used accessory with this enclosure.

See also the accessories

Equipment mounting plate page **7/2**

Accessories for mounting plate page **7/7**

Cable-management accessories page **7/120**

The ideal coupling enclosure with FL21 cut-out

Introduction



Coupling enclosure, depth 170 mm, with plain door, for equipping with terminals. Equipped with a plain door without drop-leaf opening. Delivered without cable-gland plate.
Selection guide, page **2/36**.

Technical characteristics

- Protection degree: IP 65 (with membrane mounted).
- Resistance to external mechanical impacts: IK 10.
- Structured finish, epoxy-polyester powder, RAL 7035 grey colour.

Body
Single-piece body, folded and welded. Front rail with double sheet thickness, gutter-shaped.
- Wall mounting directly or by means of fixing lugs (to be ordered separately).
- 4 M8 × 25 shouldered backstuds.
- Body with FL21-type cable-gland opening on the bottom of the enclosure (blanking plate ref. **NSYAECPFLBP** to be ordered separately).
- FL21 membranes, page **7/105**.

Door
- Easily removable and reversible door, with 20-mm return with double sheet thickness granting excellent rigidity; equipped with 2 hinges opening to 120º.
- Door opening to more than 120° for maximum accessibility (the door comes to rest on the body of the enclosure in top position).
- Maximum acceptable load on the door: 50 kg/m^2.
- Wall-mounting enclosure supplied with 3-mm double-bar lock as standard.
- Polyurethane gasket.
- M6 × 16 earthing screw for equipotential connection between the door and the body of the enclosure.

Dedicated accessories
The terminal enclosure, with a depth of 170 mm, can be equipped:
- With 2 rails to be installed on the 4 M8 × 25 shouldered backstuds.
- With a symmetrical rail to be installed on the rails.
- With a 6-mm^2 earth connection to be placed between the body and the door.
- See page **7/139**.

It can also be equipped with a plain mounting plate, see page **7/2**.

This range is completed by the Spacial S3DB and Spacial S57 offer.

See also the accessories

Fixing lugs for the earthing strip page **7/141**

Cable-gland entries without connectors page **7/106**

Viewing window page **7/135**

Dimensions

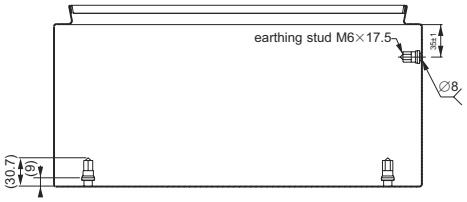
earthing stud M6×17.5
35±1
∅8
(30.7)
(9)

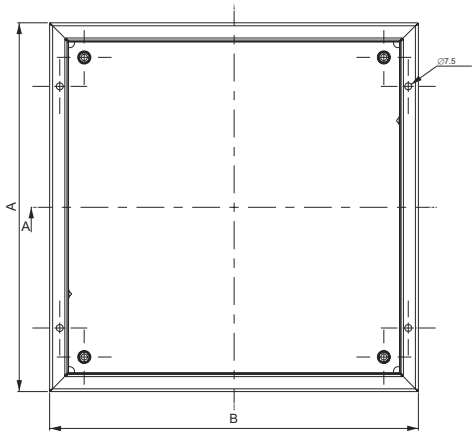
∅7.5
A
A
B

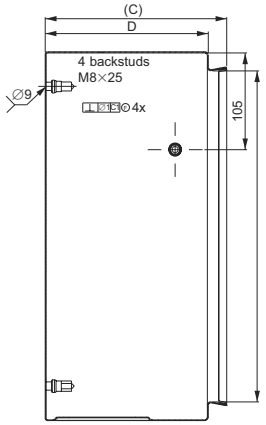
(C)
D
4 backstuds
M8×25
∅9
4x
105

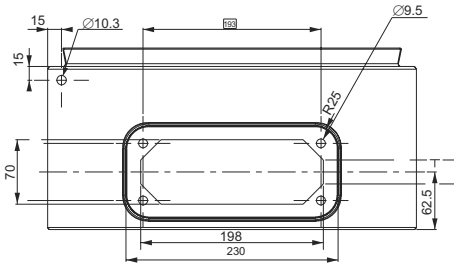
15
∅10.3
∅9.5
15
R25
70
62.5
198
230

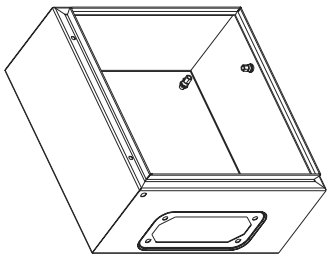

The dimensioned steel enclosure for your modular distribution application

Introduction



S3DM enclosure.



S3DM enclosure equipped with a DLM* modular chassis.





Top and bottom chequered cable-gland plates.

8 dimensions with a depth of 150 mm and glazed door. From H 400 × W 300 to H 1000 × W 800 mm.
Enclosure with transparent door, 4-mm Securit® glass.
Plain door on demand, see page **2/43**.
Selection guide, page **2/36**.

Technical characteristics

- Structured finish, polyester powder, RAL 7035 grey colour.
- Protection degree: IP 66.
- Resistance to external mechanical impacts: IK 08.

Body

- Single-piece body, folded and welded. Front rail with double sheet thickness, gutter-shaped.
- Wall mounting by means of fixing lugs (to be ordered separately, see page **2/24**).
- 4 M8 × 25-mm shouldered backstuds for installing chassis and step slides, leaving a space of 10 mm behind them.
- Cable-gland plate (245 × 80) at the top and bottom of the enclosure, guaranteeing the maximum access surface (page **2/27**).

Door

- Transparent door, 4-mm Securit® glass (plain door, see page **2/43**).
- Easily removable and reversible door, with 20-mm return with double thickness granting excellent rigidity, opening to 120°, equipped with 2 or 3 invisible hinges. Three locking points for heights of more than 600 mm.
- Wall-mounting enclosure supplied with 3-mm double-bar lock as standard.
- Perforated rails on the hinge side of the door, with drill holes with a diameter of 4.2 mm in steps of 25 mm.
- Polyurethane gasket.
- M6 × 16-mm earthing screw for equipotential connection between the door and the body of the enclosure.

Dedicated accessories

- The Spacial S3DM enclosure for modular distribution can be equipped with:

– A modular chassis (**NSYDLM•••**) with cut-out front panels for 24 to 234 modules according to the dimensions and references (see page **7/70**).
– A 6-mm² earth connection placed between the body and the door.

For enclosures with a depth of 150 mm, the chassis can be installed at the front or on the backstuds at the rear. It is possible to adjust its depth using the adjustable supports.
It can also be equipped with a plain mounting plate, see page **7/2**.



*The DLM modular chassis consists of metal cut-out front panels which can clip on with any screws. Rigid structure made from galvanised steel.The depth of the chassis can be adjusted from 40 to 85 mm, between the rail and the front panel, allowing the installation of all types of devices.The enclosure can be equipped with accessories from the Spacial standard wall-mounting range.

See also the accessories

Blanking plate page **7/73**

Terminal blocks page **7/98**

Dimensions

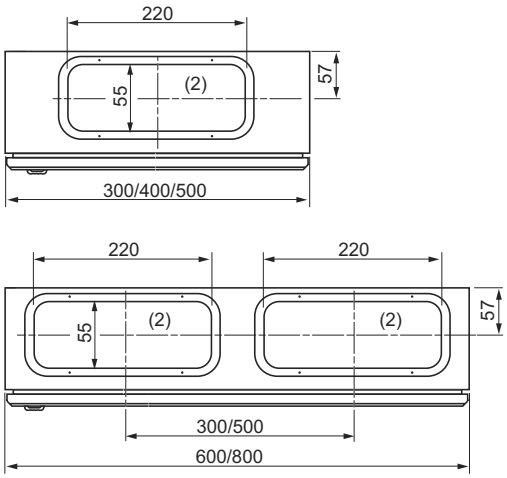

(1) Front face of the modular chassis / front face of the door.
(2) Cable-gland plates at the top and bottom of the enclosure.

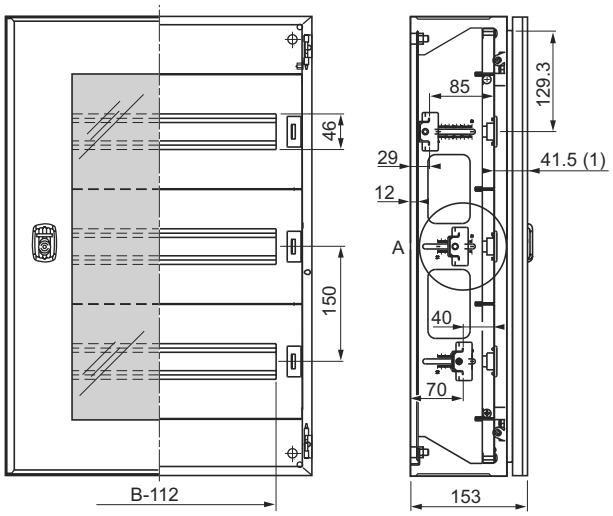

Front panel cut-out
(see page **7/71**)

Number of modules per chassis** (every 18 mm)

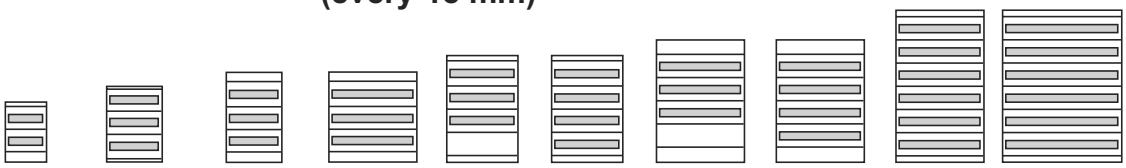

Chassis reference	NSYDLM24	NSYDLM48*	NSYDLM48P*	NSYDLM84*	NSYDLM66	NSYDLM88	NSYDLM84P	NSYDLM112	NSYDLM168	NSYDLM240
Enclosure height (mm)	400	500	600	600	700	700	800	800	1000	1000
Enclosure width (mm)	300	400	400	600	500	500	600	600	600	800
Number of rows	2	3	3	3	3	4	3	4	6	6
Modules per row	12	16	16	28	22	22	28	28	28	39
Total nº of modules	24	48	48	84	66	88	84	112	168	234

* References **NSYDLM48**, **NSYDLM48P** and **NSYDLM84**, the central row cannot receive modules at the height of the lock (check our technical instructions) when installed at the front of the enclosure. In this case, 1 module is sealed up.
** DLM modular chassis, see page **7/70**.

The provided dimensions are with the modular chassis, which is the most commonly used accessory with this enclosure.

Selection guide of plain doors for S3DM enclosure

Description	References
Spacial wall-mounting enclosure, H400 × W300	**NSYPS3D43**
Spacial wall-mounting enclosure, H500 × W400	**NSYPS3D54**
Spacial wall-mounting enclosure, H600 × W400	**NSYPS3D64**
Spacial wall-mounting enclosure, H600 × W600	**NSYPS3D66**
Spacial wall-mounting enclosure, H700 × W500	**NSYPS3D75**

See also the accessories

Mounting plate
page **7/2**

Accessories for mounting plate
page **7/7**

Cable-management accessories
page **7/101**

The IP 66 19" steel enclosure is ideal for your application!

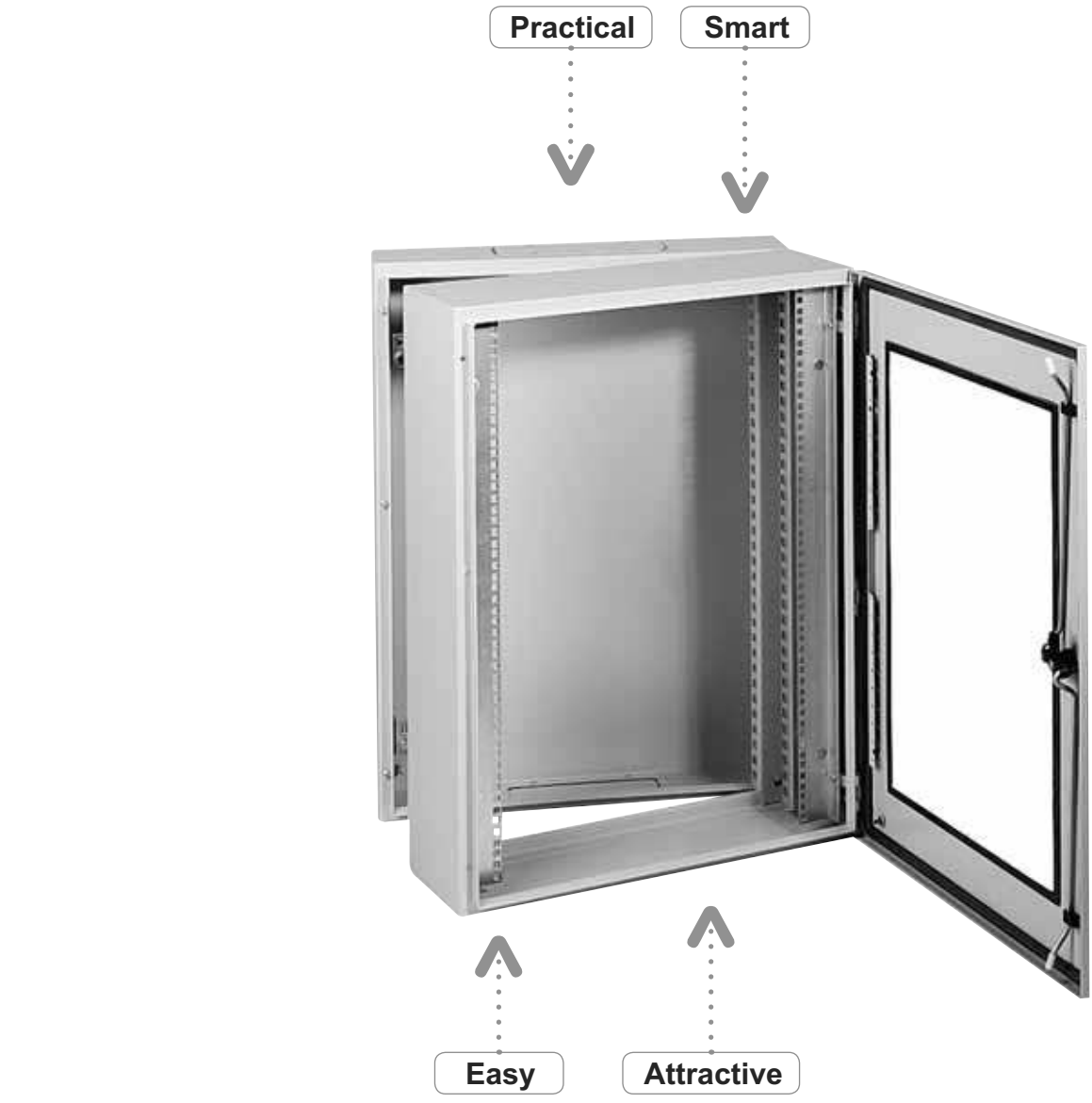

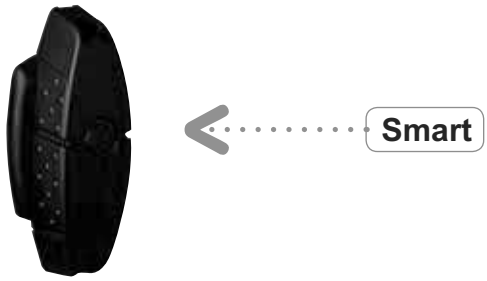

19" enclosure, IP 66

Smart:

Easily dismountable, captive hinges.

Easy:

Effortless door closing with flexible polyurethane gasket.



Enclosures equipped



Enclosures to be equipped

Choice:

1-body enclosure with swing rack: 5 references from 4 U to 16 U.
1-body enclosure with fixed rack:
5 references from 5 U to 17 U.
2-body enclosure: 10 references, 400 or 500 mm deep, from 5 U to 17 U.
All form inserts, many key locks.

Simplified control:

Pre-installed fixed or swing rack; earth connection placed between the door and the body; the enclosure is ready to use; the cardboard packaging can be reused after cabling.

Practical:

Cable-gland plates at top and bottom:
- on the rear part (2-body enclosure),
- on the body (1-body enclosure).

Smart:

Locking handle delivered with the provisional (partial engagement) or final (full engagement) enclosure.
Can also be used to loosen the caps protecting the studs when painting.

Attractive:

Chamfered door, plasma welding, polyester paint, tinted Securit® glass, ergonomic bi-material handle (optional).

And also...

Practical:

Large range of accessories, reusable packaging.

Light and resistant:

Sheet-steel enclosure, cross-shaped structure, before folding.

Certification:

According to standard IEC 62208.

19" enclosure, IP 66
Introduction and selection guides

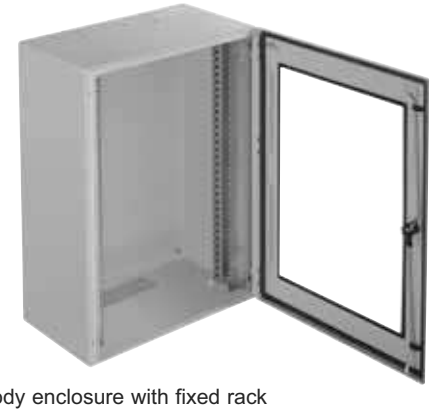

1-body enclosure with fixed rack

Spacial VDM 1-body 19" enclosure steel

The offer of VDM 19" steel enclosures, for electronics and networks, consists of 2 ranges:
- 1-body enclosure, 400 mm deep, with fixed or swing rack.
- 2-body enclosure, 380 and 480 mm deep.

Technical characteristics

- Structured finish, polyester powder, RAL 7035 grey colour. Other colours, please consult us.
- Protection degree: IP 66.
- Resistance to external mechanical impacts: IK 08.
- Single-piece body, folded and welded. Front rail with double sheet thickness, gutter-shaped.
- Perforated rails on the door, with drill holes of ∅ 4.2 mm in steps of 25 mm.
- Transparent door, Securit® glass, easily removable and reversible, with 20-mm return with double thickness granting excellent rigidity, opening to 120°, equipped with 2 or 3 invisible hinges. Three closure points for heights of more than 600 mm.
- Wall-mounting enclosure supplied with 3-mm double-bar lock as standard.
- Polyurethane gasket.
- 6 mm^2 earth connection placed between the door and the body of the enclosure.
- Wall mounting by means of fixing lugs (to be ordered separately).
- Special installation: please consult us.



1-body enclosure with swing rack

1-body enclosure, 400 mm deep, with fixed rack

Number of U	Ext. dimensions (mm)			Reference
	Height	Width	Depth	
5	300	600	400	**NSYVDM5U4F**
8	400	600	400	**NSYVDM8U4F**
10	500	600	400	**NSYVDM10U4F**
14	700	600	400	**NSYVDM14U4F**
17	800	600	400	**NSYVDM17U4F**

1-body enclosure, 400 mm deep, with swing rack

Number of U	Ext. dimensions (mm)			Reference
	Height	Width	Depth	
4	300	600	400	**NSYVDM4U4P**
7	400	600	400	**NSYVDM7U4P**
9	500	600	400	**NSYVDM9U4P**
13	700	600	400	**NSYVDM13U4P**
16	800	600	400	**NSYVDM16U4P**

- These enclosures are available equipped with a 19" swing rack or a 19" fixed rack.
- Enclosure in 2 pieces: body + door.
- Heights: 4, 7, 9, 13 and 16 U with a swing rack and 5, 8, 10, 14 and 17 U with a fixed rack.
- Cable-gland plate at the bottom of the enclosure
- Fixed rack depth-adjustable in steps of 25 mm using the step slides.
- Maximum load: 3 kg per unit.

19" enclosure, IP 66
Introduction and selection guides



Spacial VDM 2-body 19" enclosure steel

Rear

- Depth: 150 mm.
- Internal attachment point for fixing various supports.
- Hinges and locking system with the body.
- Cable-gland plate at the top and bottom.

Body

- Usable depth of 183 or 283 mm.
- Two 19" uprights made from treated steel, installed 65 mm back from the front panel.
- Height: 5, 8, 10, 14 and 17 U.
- Intermediate body installed on the rear with 120° hinge.
- Maximum load: 2 kg per unit.

2-body enclosure, 380 mm deep, with fixed rack

Number of U	Ext. dimensions (mm)			Reference
	Height	Width	Depth	
5	300	600	380	**NSYVD2M5U4**
8	400	600	380	**NSYVD2M8U4**
10	500	600	380	**NSYVD2M10U4**
14	700	600	380	**NSYVD2M14U4**
17	800	600	380	**NSYVD2M17U4**

2-body enclosure, 480 mm deep, with fixed rack

Number of U	Ext. dimensions (mm)			Reference
	Height	Width	Depth	
5	300	600	480	**NSYVD2M5U5**
8	400	600	480	**NSYVD2M8U5**
10	500	600	480	**NSYVD2M10U5**
14	700	600	480	**NSYVD2M14U5**
17	800	600	480	**NSYVD2M17U5**

19" enclosure, IP 66
Dimensions

Fixed chassis

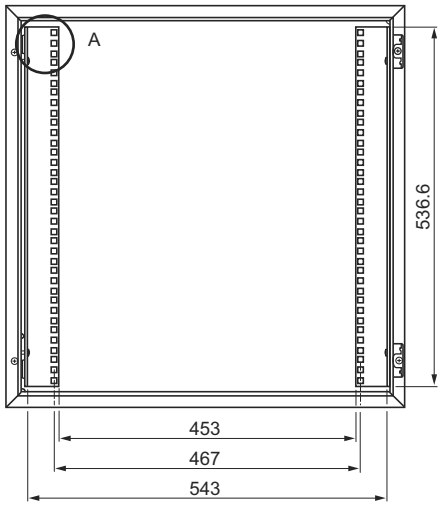

Swing chassis

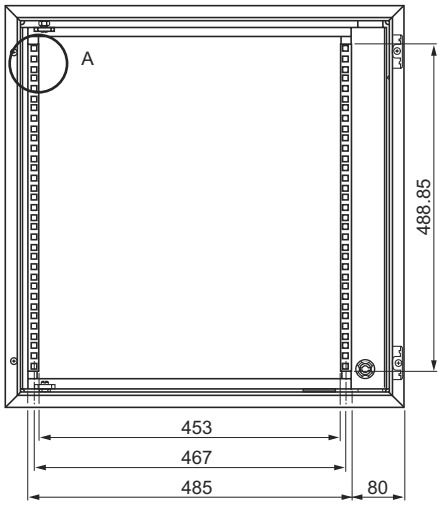

Fixed chassis mounted on the step slides

Lateral view

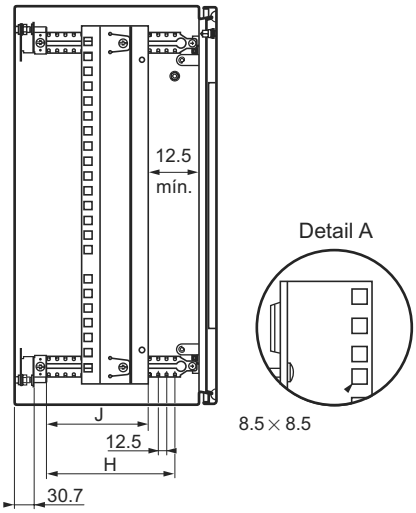

Top view

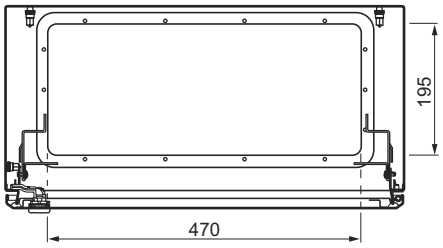

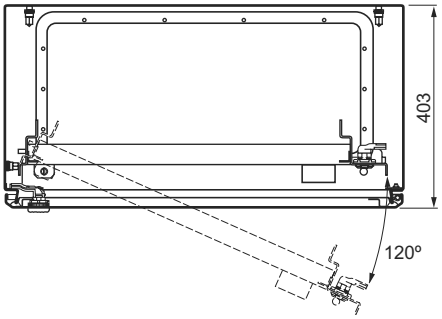

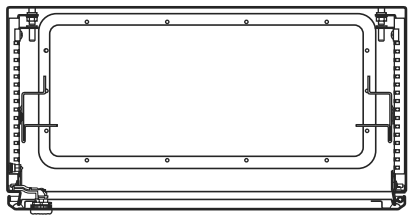

H (bars) (mm)	J (travel) (mm)
200	100
250	150
300	200
400	300

Enclosures dimension			Fixed chassis	Swing chassis	Unit number	D	E	F	G
Height (A)	Width (B)	Depth (C)							
400	600	250/300	**NSYVDM8UF**		8	-	359	188/238	61
600	600	250/300	**NSYVDM12UF**		12	-	537	188/238	61
800	600	250/300/400	**NSYVDM17UF**		17	-	759	188/238/338	61
1000	600	250/300	**NSYVDM21UF**		21	-	937	188/238	61
400	600	250/300		**NSYVDM7UP**	7	342	311	188/238	59
600	600	250/300		**NSYVDM11UP**	11	542	489	188/238	59
800	600	250/300/400		**NSYVDM16UP**	16	742	711	188/238/338	59
1000	600	250/300		**NSYVDM20UP**	20	942	889	188/238	59
1000	800	250/300/400		**NSYVDM20U8P**	20	942	889	188/238/338	59
1200	800	300/400		**NSYVDM20U8P**	25	1142	1111	238/338	59

19" enclosure, IP 66
Dimensions

2-body 19" enclosure

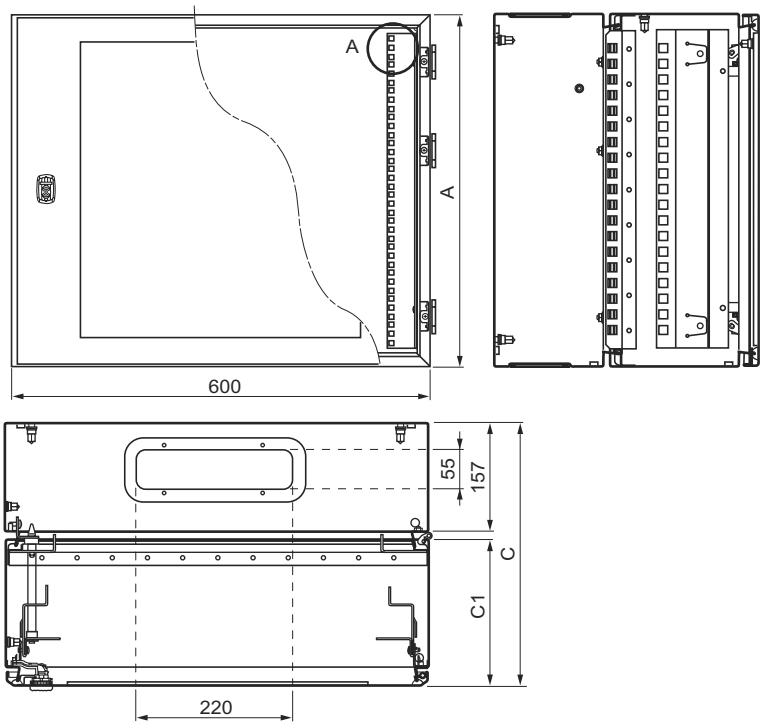

A (mm)	C (mm)	C1 (mm)	Reference
300	373	183	**NSYVD2M5U4**
400	373	183	**NSYVD2M5U5**
500	373	183	**NSYVD2M8U4**
700	373	183	**NSYVD2M8U5**
800	373	183	**NSYVD2M10U4**
300	473	283	**NSYVD2M10U5**
400	473	283	**NSYVD2M14U4**
500	473	283	**NSYVD2M14U5**
700	473	283	**NSYVD2M17U4**
800	473	283	**NSYVD2M17U5**

19" enclosures
Introduction and selection guides



Industrial networks to be equipped with 19" uprights

Technical characteristics

- Two types of enclosures are available:
– Enclosure with plain door,
– Enclosure with glazed door, Securit® glass, 4 mm thick.
- Structured finish, polyester powder, RAL 7035 grey colour.
- Protection degree: IP 66 for all single-door enclosures.
- Resistance to external mechanical impacts:
– IK 10 for the plain-door enclosures,
– IK 08 for the glazed-door enclosures.
- The enclosures are delivered without 19" rack.

Fixed or swing rack

- Fixed rack made up of 2 uprights with fixings.
- Swing rack opening to 120° with 3-mm double-bar insert lock.
- Material: galvanised sheet steel, 20/10 mm thick.
- Maximum load: 3 kg per unit.

Selection guide for S3D universal enclosures to be equipped with 19" fixed or swing rack






Enclosure dimensions (mm)			Reference of the empty enclosure		Fixed rack (1)		Swing rack (1)	
Height	Width	Depth	Glazed door	Plain door	Reference	Number of U	Reference	Number of U
400	600	250	**NSYS3D4625T**	**NSYS3D4625**	**NSYVDM8UF**	8	**NSYVDM7UP**	7
600	600	250	**NSYS3D6625T**	**NSYS3D6625**	**NSYVDM12UF**	12	**NSYVDM11UP**	11
600	600	300	**NSYS3D6630T**	**NSYS3D6630**	**NSYVDM12UF**	12	**NSYVDM11UP**	11
600	600	400	**NSYS3D6640T**	**NSYS3D6640**	**NSYVDM12UF**	12	**NSYVDM11UP**	11
800	600	250	**NSYS3D8625T**	**NSYS3D8625**	**NSYVDM17UF**	17	**NSYVDM16UP**	16
800	600	300	**NSYS3D8630T**	**NSYS3D8630**	**NSYVDM17UF**	17	**NSYVDM16UP**	16
800	600	400	**NSYS3D8640T**	**NSYS3D8640**	**NSYVDM17UF**	17	**NSYVDM16UP**	16
1000	600	250	**NSYS3D10625T**	**NSYS3D10625**	**NSYVDM21UF**	21	**NSYVDM20UP**	20
1000	600	400	**NSYS3D10640T**	**NSYS3D10640**	**NSYVDM21UF**	21	**NSYVDM20UP**	20
1000	800	250	**NSYS3D10825T**	**NSYS3D10825**	**-**	-	**NSYVDM20U8P**	20
1000	800	300	**NSYS3D10830T**	**NSYS3D10830**	**-**	-	**NSYVDM20U8P**	20
1000	800	400	**NSYS3D10840T**	**NSYS3D10840**	**-**	-	**NSYVDM20U8P**	20
1200	800	300	**NSYS3D12830T**	**NSYS3D12830**	**-**	-	**NSYVDM25U8P**	25
1200	800	400	**NSYS3D12840T**	**NSYS3D12840**	**-**	-	**NSYVDM25U8P**	25

(1) The racks are to be ordered separately.

Mounting accessories
Installation accessories

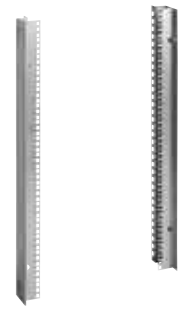

19" fixed chassis for wall mounting enclosure IP 66

- 19" fixed chassis comprising 2 19" uprights with fixing.
- Matérial: galvanized steel, thickness 20/10 mm.
- Maximum load: 3 kg per unit.
- Adjustable in depth by fixing on the step slides in accessories.

Enclosure (mm)		Unit number	Reference
Height	Width		
400	600	8	**NSYVDM8UF**
600	600	12	**NSYVDM12UF**
800	600	17	**NSYVDM17UF**
1000	600	21	**NSYVDM21UF**



19" swing chassis for wall mounting enclosure IP 66

- 19" swing chassis opening to 120° with closure by 3 mm double bar insert.
- Material: steel, textured epoxy-polyester powder paint colour grey RAL 7035.
- Maximum load: 3 kg per unit.

Enclosure (mm)		Unit number	Reference
Height	Width		
400	600	7	**NSYVDM7UP**
600	600	11	**NSYVDM11UP**
800	600	16	**NSYVDM16UP**
1000	600	20	**NSYVDM20UP**
1000	800	20	**NSYVDM20U8P**
1200	800	25	**NSYVDM25U8P**

The Spacial S3DEX steel enclosure according to the ATEX directive

Aesthetics
New RAL 7035

Choice
With 10 sizes

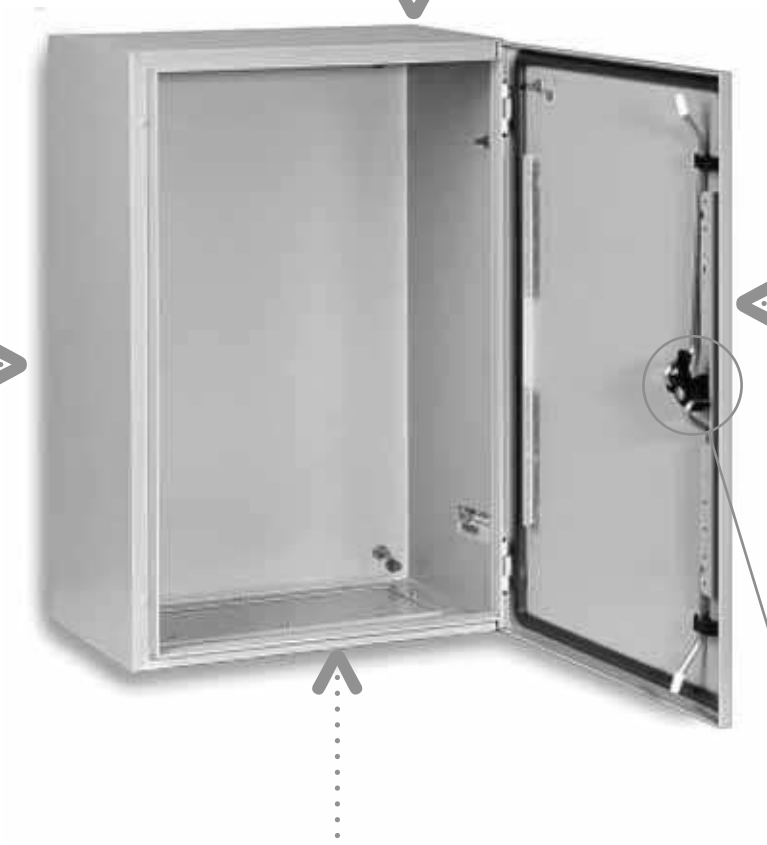

Easy
Easily reversible door

Solid
Resistance to external mechanical impacts IK 10

Smart
1 operating point for 3 locking points from H600



Aesthetics

- Sheet-steel enclosure.
- Structured finish, RAL 7035 grey colour.
- Single-piece body with a cross-shaped structure.

Solid

- Resistance to external mechanical impacts: IK 10.
- Protection degree: IP 66. Polyurethane gasket.
- Front rail of the body with double fold, gutter-shaped.

Choice

- Solid door: 10 references.

Smart

- 3-mm double-bar lock as standard.
- For heights exceeding 600 mm, three closure points with single operating point.

Easy

- The door can be removed and turned over to open towards the left.

Practical

- Large variety of common accessories with the Spacial wall-mounting enclosure range.

– Plain mounting plate.
– Silkscreened mounting plate.
– Microperforated mounting plate.
– Telequick mounting plate.
– DIN rail chassis.

- Reusable packaging.



Blind nut for external earth connection.



Earthing studs welded to the door and inside the body.



The mounting plate is mounted on four 10-mm shouldered backstuds.



The 4 fixing holes are blocked by 4 crimped blind nuts.



Example of specific ATEX marking.



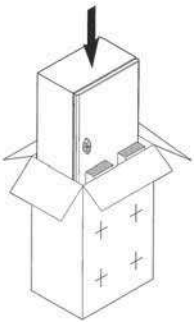

Delivered in reusable cardboard with assembly instructions enclosed and wall installation template on the cardboard.

Introduction





Download our ATEX certificates and product sheets over the internet.

Technical characteristics

The Spacial S3DEX range of steel enclosures is certified by LCIE with no. LCIE 02ATEX0037U and codicil no. LCIE 02ATEX0037U/01 (component certificate).

The enclosures have the following marks:
⟨Ex⟩ II 2 GD Ex tD A21 IP6X according to ATEX directive 94/9/EC and standards EN 60079-0 (2004), EN 60079-7 (2006), EN 61241-0 (2005) and EN 61241-1 (2004).

Technical description

- Tightness by protection rating: IP 66 (enclosures with single door).
- Resistance to external impacts: IK 10.
- Structured finish, epoxy-polyester powder paint, RAL 7035 grey colour.

Compared with the universal Spacial wall-mounting enclosure, the Spacial S3DEX enclosure has:
- The four fixing holes blocked by four crimped blind nuts.
- One crimped M8 blind nut for an external earth connection (braid not supplied).

Enclosure body

- 4 M8 × 25 shouldered backstuds for mounting the mounting plate and the step slides leaving a space of 10 mm behind them.
- Cable-gland plate with grid pattern to facilitate drilling and provide the maximum access surface.
- Welded earthing stud for equipotential connection between the door and the body.

Door

- Standard enclosure supplied with a double-bar lock.
- Polyurethane sealing gasket.
- Equipotential connection between the door and the body by means of the M6 × 16 earthing screws.
- Removable and reversible door, opening to 120°.
- Simple reversal of linkage.
- Maximum load: 50 kg/m².
- Perforated rails on the door: 2 vertical rails from H = 400 mm, 2 vertical rails and 2 horizontal rails from W = 800 mm.

Ambient temperature limits:
–25 °C ≤ Ta ≤ +40 °C.

Delivered in an impact-resistant, eco-friendly packaging.




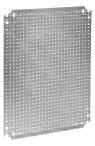





Enclosure dimensions (mm)			Enclosure reference	Mounting plates				Mixed symmetrical chassis	Bars slides	Fixing legs	
Height	Width	Depth		Plain	Silkscreened	Microperforated	Telequick			Steel	Stainless steel
300	200	150	**NSYS3DEX3215**	**NSYMM32**	-	-	**NSYMR32**	-	-	**NSYAEFPFSC**	**NSYAEFPFXSC**
300	300	200	**NSYS3DEX3320**	**NSYMM33**	-	**NSYMF33**	**NSYMR33**	**NSYMD33**	**NSYSDCR200**	**NSYAEFPFSC**	**NSYAEFPFXSC**
400	300	200	**NSYS3DEX4320**	**NSYMM43**	**NSYMS43**	**NSYMF43**	**NSYMR43**	**NSYMD43**	**NSYSDCR200**	**NSYAEFPFSC**	**NSYAEFPFXSC**
400	400	200	**NSYS3DEX4420**	**NSYMM44**	**NSYMS44**	**NSYMF44**	-	-	**NSYSDCR200**	**NSYAEFPFSC**	**NSYAEFPFXSC**
500	400	200	**NSYS3DEX5420**	**NSYMM54**	**NSYMS54**	**NSYMF54**	**NSYMR54**	**NSYMD54**	**NSYSDCR200**	**NSYAEFPFSC**	**NSYAEFPFXSC**
600	400	250	**NSYS3DEX6425**	**NSYMM64**	**NSYMS46**	**NSYMF64**	**NSYMR64**	**NSYMD64**	**NSYSDCR250**	**NSYAEFPFSC**	**NSYAEFPFXSC**
600	600	250	**NSYS3DEX6625**	**NSYMM66**	**NSYMS66**	**NSYMF66**	**NSYMR66**	**NSYMD66**	**NSYSDCR250**	**NSYAEFPFSC**	**NSYAEFPFXSC**
700	500	250	**NSYS3DEX7525**	**NSYMM75**	**NSYMS75**	**NSYMF75**	**NSYMR75**	**NSYMD75**	**NSYSDCR250**	**NSYAEFPFSC**	**NSYAEFPFXSC**
800	600	300	**NSYS3DEX8630**	**NSYMM86**	**NSYMS86**	**NSYMF86**	**NSYMR86**	**NSYMD86**	**NSYSDCR300**	**NSYAEFPFSC**	**NSYAEFPFXSC**
1000	800	300	**NSYS3DEX10830**	**NSYMM108**	-	**NSYMF108**	**NSYMR108**	**NSYMD108**	**NSYSDCR300**	**NSYAEFPFSC**	**NSYAEFPFXSC**

The accessories of the Spacial standard wall-mounting enclosures can be installed in the Spacial S3DEX wall-mounting enclosures. However, plastic accessories should not be used, due to the risk of a static charge.

Dimensions

A: Height
B: Width
C: Depth

(1) 4 M8 × 25 mm backstuds.
(2) 2 M6 × 17.5 mm earthing studs.
(3) Stud centre-to-centre distance.
(4) Crimped blind nut centre-to-centre distance.
(5) Blind nut for external earth.

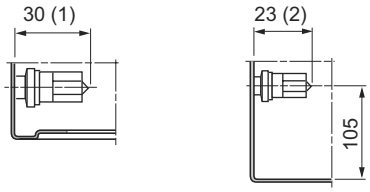

Detail (1) **Detail (2)**

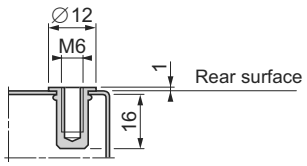

Detail (4)
4 crimped blind nuts for direct fixing of the fixing lugs

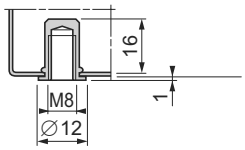

Detail (5)
1 crimped blind nut for the external earth

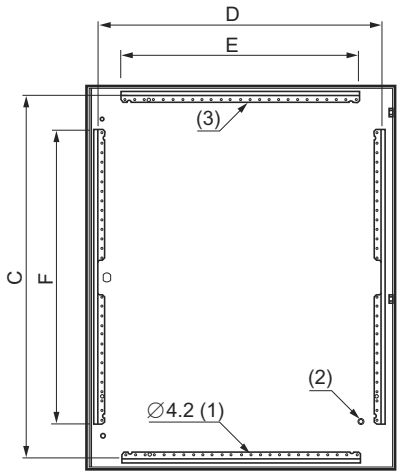

(1) Perforations with a pitch of 25 mm.
(2) 1 M6 × 17.5 mm earthing stud.

1-door enclosure

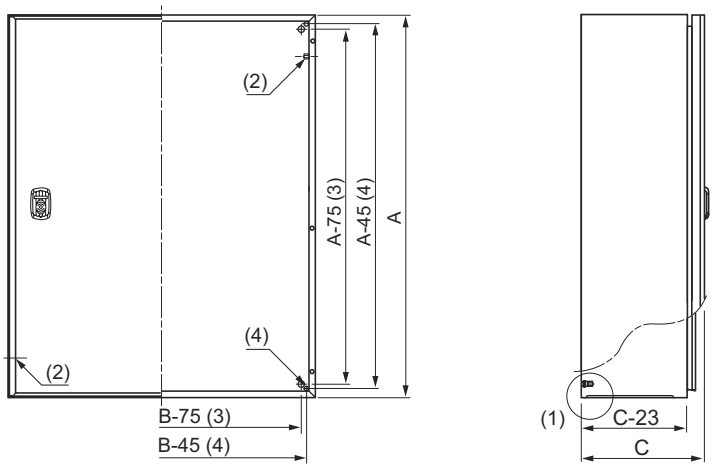

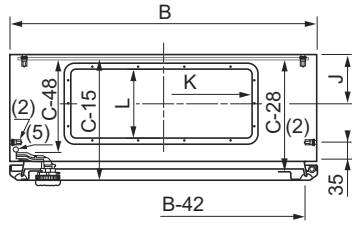

Enclosure (mm)		Cable-gland plate				
Width	Depth	Dimensions (mm)	No	J	K	L
200	150	140 × 80	1	57	115	55
300	200	245 × 130	1	80	220	105
400	200-250	345 × 130	1	80	320	105
500	250	445 × 130	1	80	420	105
600	250	545 × 130	1	80	520	105
600	300	495 × 220	1	126	470	195
800	300	345 × 130	2	80	320	105

Perforated rails on the door

Enclosure (3) (mm)		Perforated rails on the door (mm)			
Height (A)	Width (B)	Vertical		Horizontal	
		F	D	E	C
400	300	320	237	-	-
400	400	320	337	-	-
600	400	370	337	-	-
600	600	370	537	-	-
700	500	470	437	-	-
800	600	570	537	-	-
1000	800	770	737	620	949

(3) The doors of enclosures with dimensions of less than 800 × 600 mm do not have horizontal wire guides.

The steel enclosure suited to your electromagnetic protection needs



Enclosure delivered with plain mounting plate

- Single-piece metal enclosures made from special sheets of ALUZINC 150.
- The presence of 55% aluminium on the surface of the sheet metal ensures good reflection of electromagnetic waves.
- Painted on the outside with epoxy-polyester resin, RAL 7035 grey, structured.

Technical characteristics

- Protection degree: IP 55, according to IEC 60529.
- Resistance to external mechanical impacts: IK 10.
- Body:

– Single-piece body, folded and welded.
– Entirely sealed body with no cable entry and no opening.

- Equipped with four shouldered backstuds allowing direct fixing of the mounting plate:

– Built-in plain mounting plate made from galvanised sheet steel (potential reference sheet).
– Its low resistivity promotes earth continuity.
– Direct fixing or using wall-fixing lugs, ref. **NSYPFCR** (to be ordered separately).

- Door:

– The special body-door gasket (IP + EMC) provides, in addition to water and dust **tightness**, electric continuity between the door and the body of the enclosure.
– The metal lock with earth continuity helps improve the general shielding.
– An earthing braid added to the enclosure between the body and the door guarantees a good earth connection and, consequently, good electromagnetic compatibility.
– 3-mm double-bar lock.

Other sizes: consult us.

Dimensions (mm)			Fig.	Weight Kg	Reference
Height	Width	Depth			
400	300	200	1	7.5	**NSYS3HF4320P**
400	600	200	1	13.0	**NSYS3HF4620P**
500	400	200	2	11.5	**NSYS3HF5420P**
600	400	200	2	13.0	**NSYS3HF6420P**
600	600	250	2	20.5	**NSYS3HF6625P**
700	500	250	2	19.0	**NSYS3HF7525P**
800	600	300	2	32.8	**NSYS3HF8630P**
1000	800	300	2	53.2	**NSYS3HF10830P**
1200	800	300	2	59.0	**NSYS3HF12830P**

Fixing lugs, ref. **NSYPFCR** to be ordered separately (1 set of 4 lugs).

Attenuation of the Spacial S3HF enclosure

The graphic next to these lines shows the attenuation curves (dB) according to the frequency (MHz).
General information on Electromagnetic Compatibility, see pages **9/14** to **9/16**.

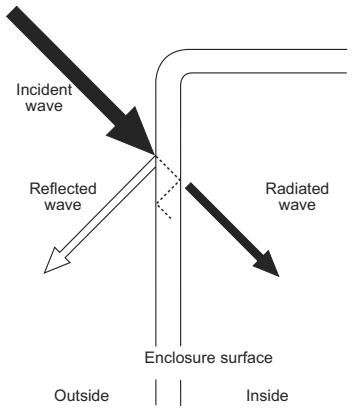

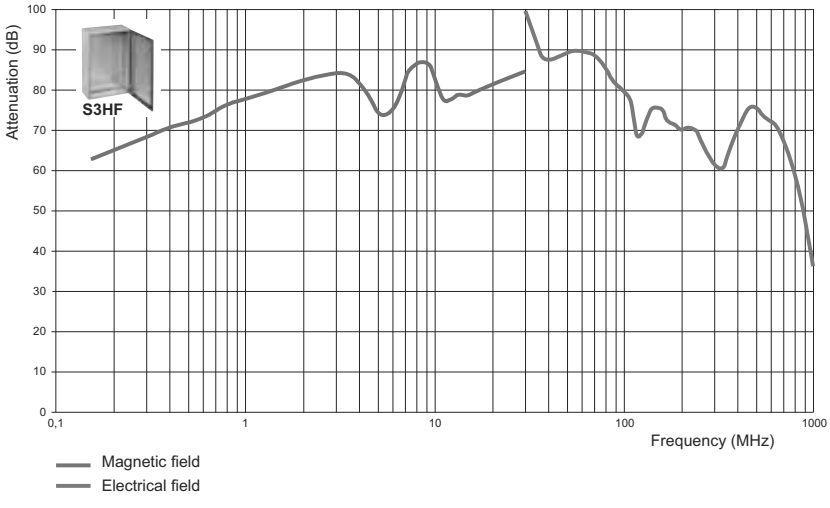

Dimensions

A = Height.
B = Width.
C = Depth.

Figure 1

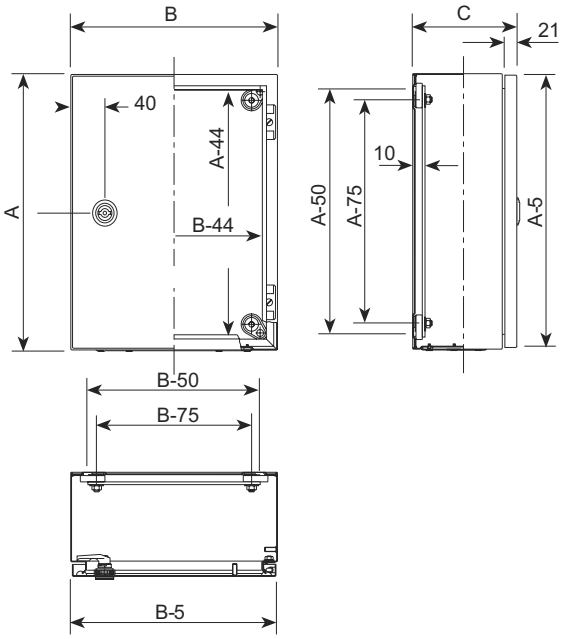

Figure 2

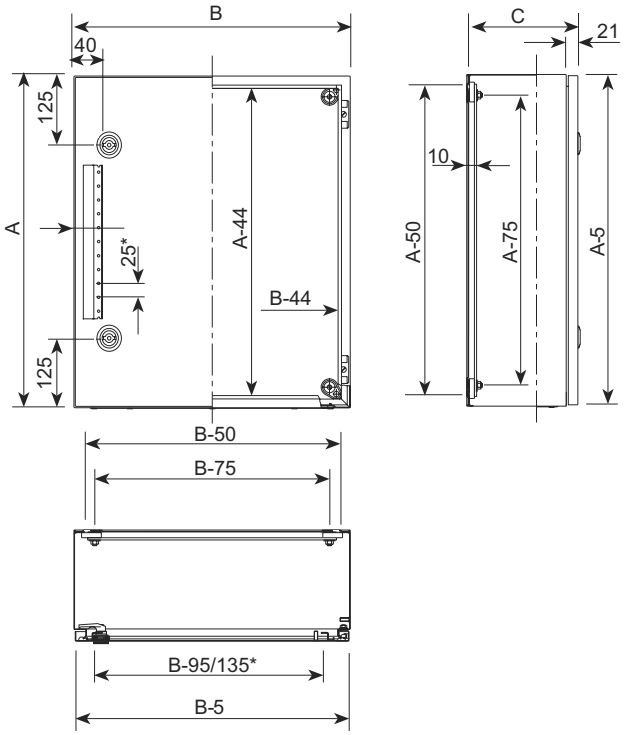

* Model 1200 × 800.

See also the accessories

Door accessories see page **7/130**

Rails see page **7/50**

Ventilation see page **8/20**

The Control and Human-Machine Dialogue enclosure, ideal for all your interfaces

Robustness

Fixing on metal support.
Metal tube.
Fixing on aluminium enclosure.

Choice

8 dimensions.

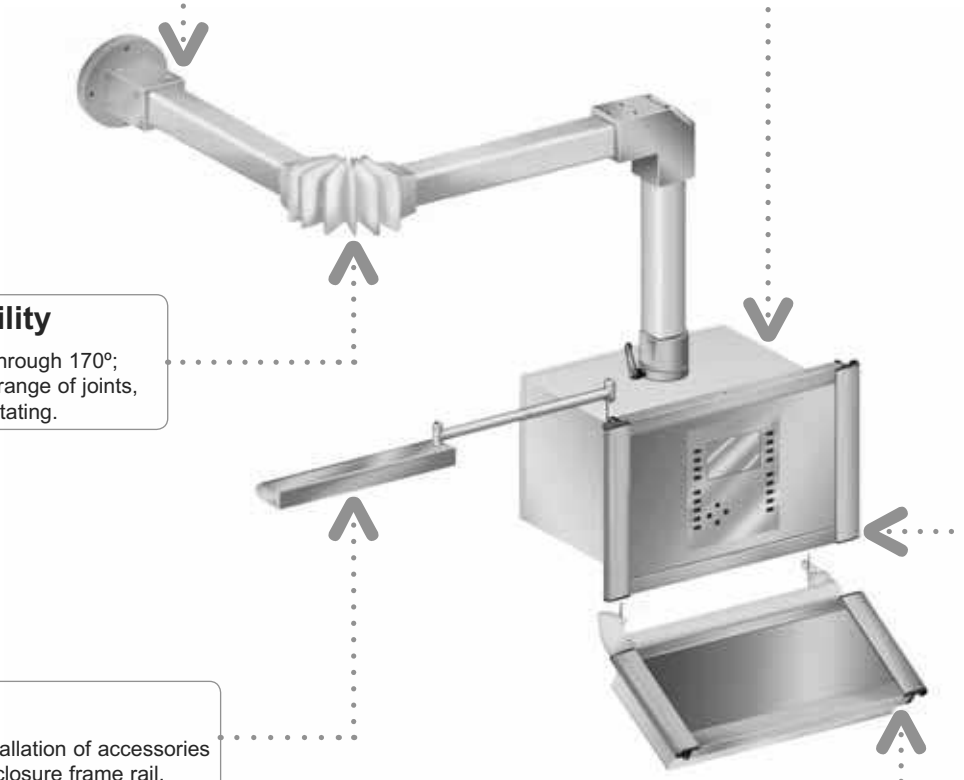

Flexibility

Rotation through 170°; complete range of joints, fixed or rotating.

Ergonomics

The rail of the frame guarantees good rigidity for the enclosure.

Easy

Direct installation of accessories on the enclosure frame rail.

Practical

Keyboard box fixed directly on the enclosure.

The Spacial S3CM offer for human-machine dialogue consists of:
– Control enclosures.
– A box-keyboard.
– A system of arms and joints, fixed or rotating.
– Accessories.
The global dialogue system combines robustness with aesthetics and ergonomics.



Choice

8 enclosure sizes, with steel body,
from 300 × 300 × 200 mm to 800 × 600 × 300 mm.

Solid

IK 10.
Top wall reinforced by a plate with a thickness of 3 mm.



Sealing

IP 54, polyurethane gasket.

Aesthetics

Extruded aluminium rail frame.
RAL 7040 paint: body.
RAL 7035 paint: enclosure.

Customisation to your image or the aesthetics of your machine: consult us.

Easy

Easy access to the equipment by a rear door, opening to 120°.



Robustness

2 tube sizes in extruded steel, 50 and 80 mm square, thickness 4 mm.

Practical

Large range of accessories.

Smart

- Direct installation of accessories on the enclosure frame rail:
– Lighting.
– Vertical document support.
– Keyboard support.
– Keyboard support.
– Laptop computer support.
- A box-keyboard is installed directly on the enclosure.



Standard equipment

2 perforated rails installed on the 2 lateral sides, for installing equipment, earth connection installed on the body.

Specific

Customised enclosure production, contact us.

Choice of models according to the load and the overhang



Our system of tubes and joints, fixed or rotating, enables all the solutions to respond to the installation needs of the control enclosures for human-machine dialogue. Every model is suitable for tubes with a square section of 50 mm for light loads, or of 80 mm for heavy loads (see selection table on page **2/62**).

Without intermediate joint

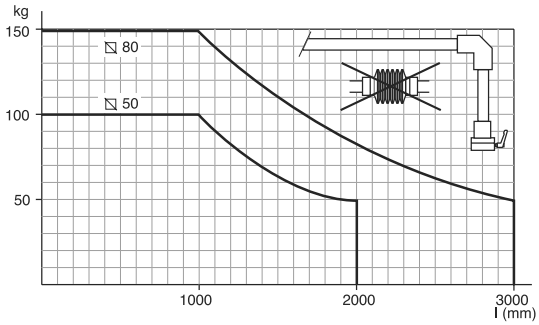

Without intermediate joint

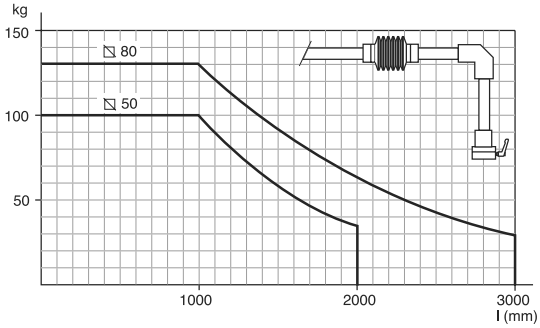

Examples

1- Without intermediate joint

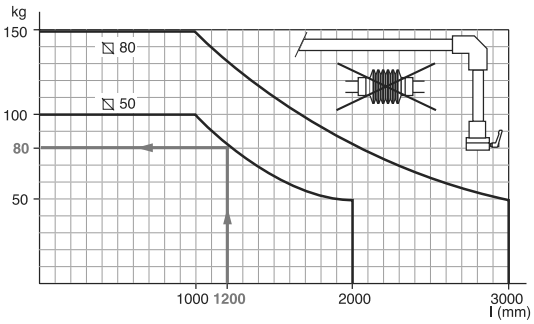

1- Suspension system without intermediate join attached:

The load (a + b + enclosure + installed equipment) must be less than the maximum load.

Example:
Using a system with a diameter of 50 mm, without intermediate join, with an offset of 1200 mm, the maximum supported load is 80 kg.

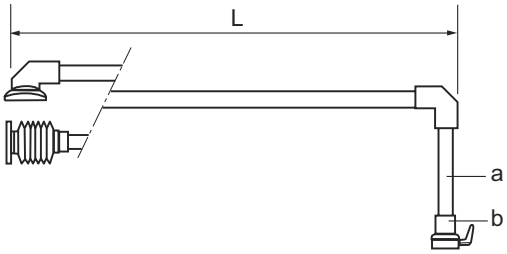

2- Without intermediate joint

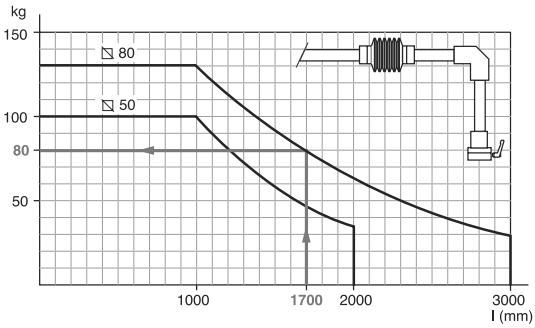

2- Suspension system with intermediate join attached:

The load (a + b + enclosure + installed equipment) must be less than the maximum load.

Example:
Using a system with a diameter of 80 mm, without intermediate join, with an offset of 1700 mm, the maximum supported load is 80 kg.

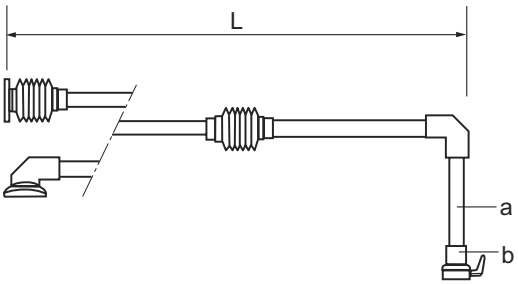

Assembly overview

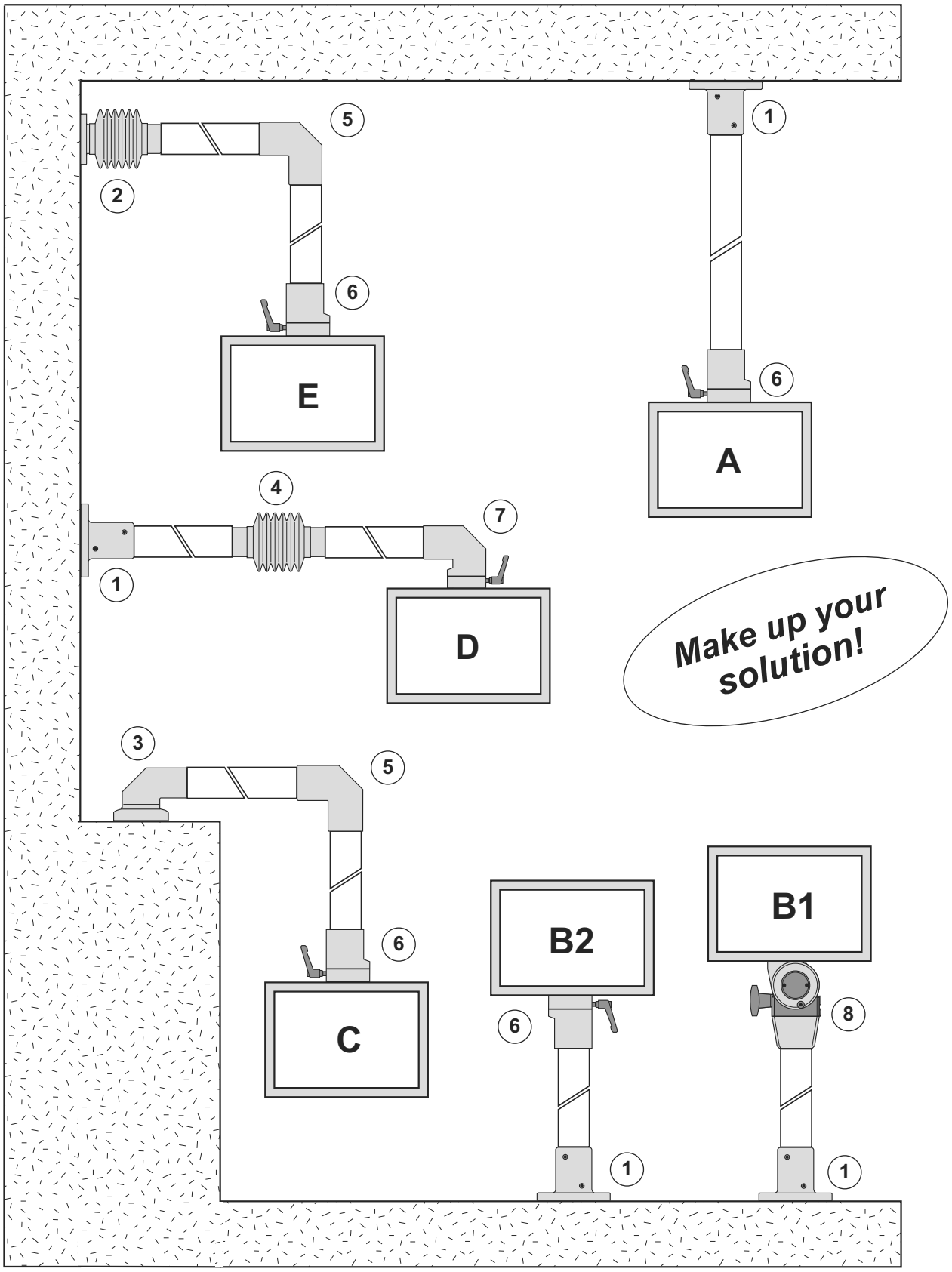

Selection guide

Enclosure	H × W X D (mm) top wall	References					
		To ceiling		B1 floor		B2 floor	
		50 mm	80 mm	50 mm	80 mm	50 mm	80 mm
	300 × 300 × 200	**NSYS3CM303020**	-	**NSYS3CM303020**	-	**NSYS3CM303020**	-
	300 × 400 × 200	**NSYS3CM304020**	-	**NSYS3CM304020**	-	**NSYS3CM304020**	-
	400 × 400 × 200	**NSYS3CM404020**	-	**NSYS3CM404020**	-	**NSYS3CM404020**	-
	400 × 600 × 250	**NSYS3CM406025**	-	**NSYS3CM406025**	-	**NSYS3CM406025**	-
	500 × 500 × 250	**NSYS3CM505025**	-	**NSYS3CM505025**	-	**NSYS3CM505025**	-
	600 × 600 × 200	**NSYS3CM606020**	-	**NSYS3CM606020**	-	**NSYS3CM606020**	-
	600 × 800 × 300	-	**NSYS3CM608030**	-	**NSYS3CM608030**	-	**NSYS3CM608030**
	800 × 600 × 300	-	**NSYS3CM806030**	-	**NSYS3CM806030**	-	**NSYS3CM806030**
Tube	**Length (m) / Tube section**	**50 mm**	**80 mm**	**50 mm**	**80 mm**	**50 mm**	**80 mm**
	0.5	**NSYCMT5005**	**NSYCMT8005**	**NSYCMT5005**	**NSYCMT8005**	**NSYCMT5005**	**NSYCMT8005**
	1	**NSYCMT5010**	**NSYCMT8010**	**NSYCMT5010**	**NSYCMT8010**	**NSYCMT5010**	**NSYCMT8010**
	1.5	**NSYCMT5015**	**NSYCMT8015**	**NSYCMT5015**	**NSYCMT8015**	**NSYCMT5015**	**NSYCMT8015**
	2	**NSYCMT5020**	**NSYCMT8020**	**NSYCMT5020**	**NSYCMT8020**	**NSYCMT5020**	**NSYCMT8020**
Fixing on support (steel material)							
	① Fixed base	**NSYCMUMR50**	**NSYCMUMR80**	**NSYCMUMR50**	**NSYCMUMR80**	**NSYCMUMR50**	**NSYCMUMR80**
	② Wall fixing with joint	-	-	-	-	-	-
	③ Rotating straight fitting	-	-	-	-	-	-
Inter-tube fitting (aluminium material)							
	④ Horizontal inter-tube joint	-	-	-	-	-	-
	⑤ Fixed bracket	-	-	-	-	-	-
Fixing on enclosure (aluminium material)							
	⑥ Rotating fixing on enclosure	**NSYCMUCR50**	**NSYCMUCR80**	-	-	**NSYCMUCR50**	**NSYCMUCR80**
	⑦ Rotating fixing in bracket on enclosure	-	-	-	-	-	-
	⑧ Tilting fixing on enclosure	-	-	**NSYCMUCP50** (1) **NSYCMUCP80** (2)	**NSYCMUCP50** (3) **NSYCMUCP80** (3)	-	-

(1) For tube ∅ 50 mm.
(2) For tube ∅ 80 mm.
(3) Installation on an enclosure D300 requires plate ref. **NSYCMUCPAD87** (see page **2/74**).

Selection guide

Enclosure	H × W × D (mm) top wall	References					
		C on frame.		D wall		E wall	
		50 mm	80 mm	50 mm	80 mm	50 mm	80 mm
	300 × 300 × 200	NSYS3CM303020	-	NSYS3CM303020	-	NSYS3CM303020	-
	300 × 400 × 200	NSYS3CM304020	-	NSYS3CM304020	-	NSYS3CM304020	-
	400 × 400 × 200	NSYS3CM404020	-	NSYS3CM404020	-	NSYS3CM404020	-
	400 × 600 × 250	NSYS3CM406025	-	NSYS3CM406025	-	NSYS3CM406025	-
	500 × 500 × 250	NSYS3CM505025	-	NSYS3CM505025	-	NSYS3CM505025	-
	600 × 600 × 200	NSYS3CM606020	-	NSYS3CM606020	-	NSYS3CM606020	-
	600 × 800 × 300	-	NSYS3CM608030	-	NSYS3CM608030	-	NSYS3CM608030
	800 × 600 × 300	-	NSYS3CM806030	-	NSYS3CM806030	-	NSYS3CM806030
Tube	**Length (m) / Tube section**	**50 mm**	**80 mm**	**50 mm**	**80 mm**	**50 mm**	**80 mm**
	0.5	NSYCMT5005	NSYCMT8005	NSYCMT5005	NSYCMT8005	NSYCMT5005	NSYCMT8005
	1	NSYCMT5010	NSYCMT8010	NSYCMT5010	NSYCMT8010	NSYCMT5010	NSYCMT8010
	1.5	NSYCMT5015	NSYCMT8015	NSYCMT5015	NSYCMT8015	NSYCMT5015	NSYCMT8015
	2	NSYCMT5020	NSYCMT8020	NSYCMT5020	NSYCMT8020	NSYCMT5020	NSYCMT8020
Fixing on support (steel material)							
	① Fixed base	-	-	NSYCMUMR50	NSYCMUMR80	-	-
	② Wall fixing with joint	-	-	-	-	NSYCMUMA50	NSYCMUMA80
	③ Rotating straight fitting	NSYCMUMC50	NSYCMUMC80	-	-	-	-
Inter-tube fitting (aluminium material)							
	④ Horizontal inter-tube joint	-	-	NSYCMUIA50	NSYCMUIA80	-	-
	⑤ Fixed bracket	NSYCMUTC50	NSYCMUTC80	-	-	NSYCMUTC50	NSYCMUTC80
Fixing on enclosure (aluminium material)							
	⑥ Rotating fixing on enclosure	NSYCMUCR50	NSYCMUCR80	-	-	NSYCMUCR50	NSYCMUCR80
	⑦ Rotating fixing in bracket on enclosure	-	-	NSYCMUCC50	NSYCMUCC80	-	-
	⑧ Tilting fixing on enclosure	-	-	-	-	-	-

Control enclosure
Introduction





Technical characteristics:

- RAL 7035 grey, structured finish, epoxy-polyester powder.
- Protection degree: IP 54.
- Resistance to external mechanical impacts: IK 10.
- Dimensions and weights, see page **2/65**.

The control enclosures consist of:

- **A steel body equipped with:**
  - Reinforcement plate: the top wall is reinforced by a plate (3 mm) and pierced with a hole ∅ 54 or 87 mm (according to the reference) to allow hanging installation of the enclosure.
  - 4 welded studs on the 2 inner vertical walls, for fixing the rails.
  - 2 rails (with drill holes) for installing equipment.
  - A rear door, opening to 120° and closing with double-bar lock.

- **An aluminium front face (2.5 mm thick):**
  - This surface is protected on both sides by a plastic film, allowing the installation of the dialogue elements.
  - A trim frame made from 4 extruded-aluminium rails: the frame and the front face are delivered assembled. Structured finish, epoxy-polyester powder, RAL 7040 grey colour (other colours on demand).

- The design of these rails takes into account the accessory mounting functions (lamp, document support, keyboard support, laptop support, etc.), the ergonomics for handling the enclosure and its overall aesthetics.



Perforated rails installed on lateral studs:



Rear door with double-bar lock.



Frame ergonomics.



Fixing of the trim frame by screws.



Detail of the reinforcement plate.



Installation example.

Dimensions



External dimensions (mm)			D	F	G	H	J	K	L	PPC (1)	kg	Tube section (mm)	Enclosure
Height A	Width B	Depth C											References
300	300	200	162	260	260	100	45	58	7	-	8.6	50	**NSYS3CM303020**
300	400	200	162	260	360	100	45	58	7	-	9.5	50	**NSYS3CM304020**
400	400	200	262	360	360	100	45	58	7	-	11.4	50	**NSYS3CM404020**
400	600	250	262	360	560	125	75	58	7	●	17.9	50	**NSYS3CM406025***
500	500	250	362	460	460	125	75	58	7	-	20.2	50	**NSYS3CM505025**
600	600	200	462	560	560	100	45	58	7	●	26.5	50	**NSYS3CM606020***
600	800	300	462	560	760	150	100	87	9	-	34.9	80	**NSYS3CM608030**
800	600	300	662	760	560	150	100	87	9	●	33.6	80	**NSYS3CM806030***

* Enclosure equipped with a cable-gland plate (see diagram below).

A: Height
B: Width
C: Depth

Control enclosure

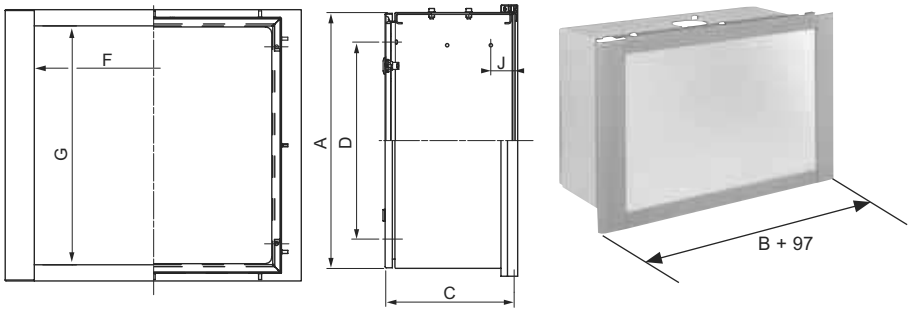

W600 enclosure + keyboard installation

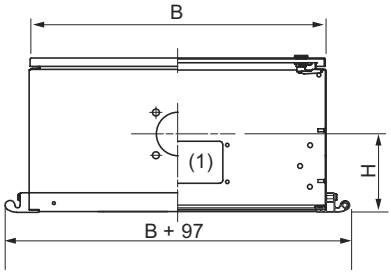

Enclosure D200 to D250

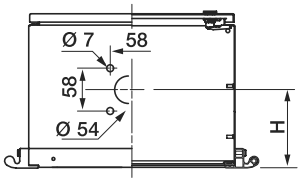

D300 enclosure

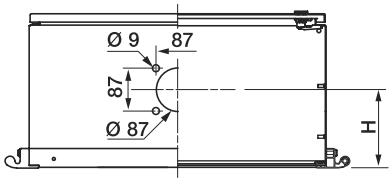

(1) PPC: cable-gland plate.

Box-keyboard for control enclosure
Introduction



The box is installed on the control enclosures with a width of 600 mm. It then has an angle of 120° with its front face. All the accessories required for installation are delivered with 2 brackets and 1 trim rail, 1 hose for cable entry.

Technical features:

- Protection degree: IP 54.
- Resistance to external mechanical impacts: IK 10.
- Weight: 8 kg.

The box for the keyboard consists of:
- A steel body, structured finish, epoxy-polyester powder, RAL 7035 grey colour, with a screwed cover.
- An aluminium front face (2.5 mm thick) for installing a keyboard.
- A trim frame made from 2 extruded-aluminium rails guaranteeing ergonomic handling of the box and the aesthetics of the unit.
  The frame and the front face are delivered assembled. Structured finish, epoxy-polyester powder, RAL 7040 grey colour.

These enclosures can be customised (colour, machining, etc.). Please contact us.

Specific

External dimensions (mm)			Box-keyboard
Height	Width	Depth	Reference
250	600	110	**NSYCMT2560110**

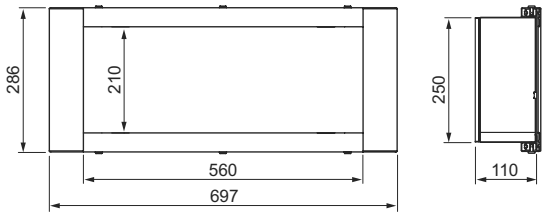

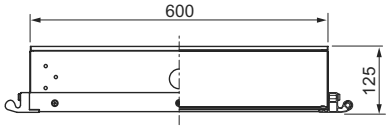

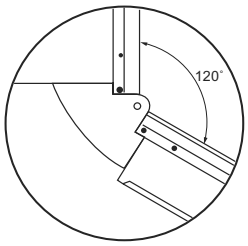

Detail from the installation of the box-keyboard on the control enclosure



Example
Enclosure equipped with the box-keyboard.

Accessories



Support example.

Support

- Three different types of support are available:
  – Vertical support for documents, size 315 × 230 mm, sheet steel 1.2 mm thick.
  – Horizontal support for keyboard, size 500 × 200 mm, sheet steel 2 mm thick.
  – Horizontal support for laptop computer, size 350 × 310 mm, sheet steel 2 mm thick.
- Installation on the left or right rail of the frame of the control enclosure.
- Structured finish, epoxy-polyester powder, RAL 7035 grey colour.

Weight (kg)	Type of support	References
1.15	Vertical	**NSYCMSPP**
2.16	Keyboard	**NSYCMBPT**
2.04	Laptop computer	**NSYCMBPC**



NSYCMSPP

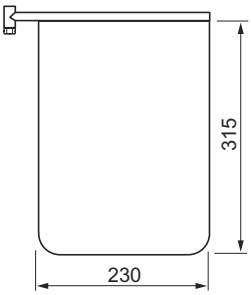



NSYCMBPT

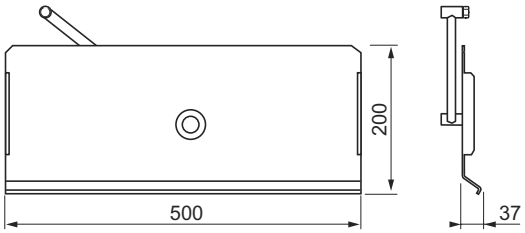



NSYCMBPC

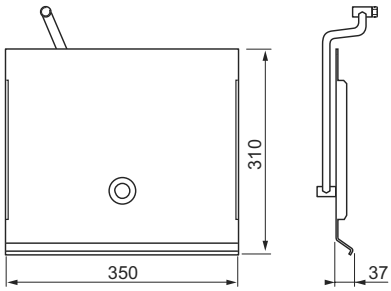



NSYCMLAG lighting.

Lighting

- A lighting device adapts directly to the left or right rail of the frame of the control enclosure.
- Low-power lighting source, E27 socket, 11 W, 220-240 V / 50-60 Hz.
- Protection degree: IP 20.
- Insulation class II.
- According to standards IEC 55014 and IEC 61000-6-2.
- Weight: 1.5 kg.

Name	Reference
Lighting	**NSYCMLAG**

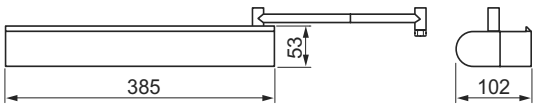

Composition
Fixing on support



1 Fixed base

- Support foot for direct horizontal or vertical connection.
- Material: moulded steel, structured finish, powder, RAL 7040 grey colour.

Dimensions (mm)										Weight (kg)	References
⧅ a	b	c	d	D	F	h	I	L	S		
50 mm square	42	105	11	125	152	72	97	110	15	3.25	**NSYCMUMR50**
80 mm square	72	134	11	173	201	111	126	140	16	7	**NSYCMUMR80**

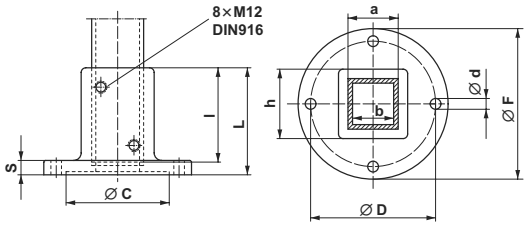

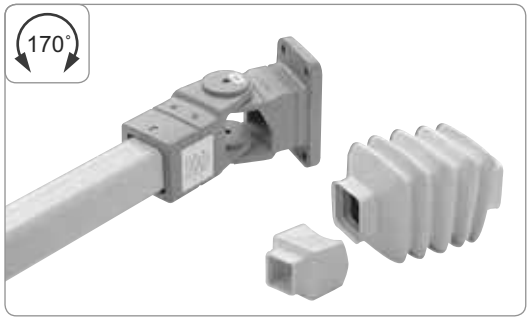

2 Wall fixing with joint

- Device allowing rotation through 170º of a horizontal tube, with a square section of 50 or 80 mm, and its fixing on a vertical surface.
- Protection by bellows, RAL 7035 grey colour.
- Possibility of passing cables through the inside of the joint.
- Material: moulded steel, structured finish, powder, RAL 7040 grey colour.

Dimensions (mm)												Weight (kg)	References
⧅ C for tube	A	B	D	E	F	G	H	I	J	K	L		
50 mm square	118	92	42	85	11	148	80	130	55	68	105	4.35	**NSYCMUMA50**
80 mm square	160	115	72	130	11	190	115	175	90	103	150	9.45	**NSYCMUMA80**

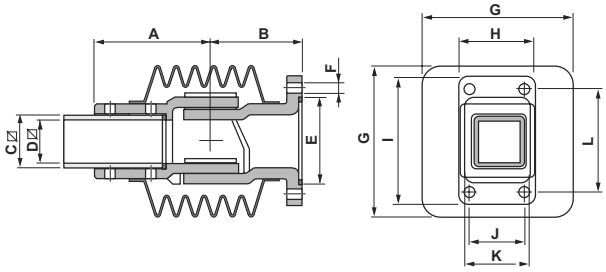

Composition
Fixing on support



3 Rotating straight fitting

- Device allowing the fixing and rotation through 295º of tubes, with a square section of 50 or 80 mm, in horizontal position.
- Without blocking the chosen position.
- Option of passing cables through the inside.
- Material: moulded steel, structured finish, epoxy-polyester powder, RAL 7040 grey colour.
- Fixing by 4 screws, not included.

Dimensions (mm)												Weight (kg)	References
⧅ C	A	B	D	E	F	G	H	I	J	K	L		
50 mm square	68	50	42	30	96	96	134	140	120	9	55	5.4	**NSYCMUMC50**
80 mm square	98	74	72	45	144	141.5	195.5	210	180	13	84	15.7	**NSYCMUMC80**

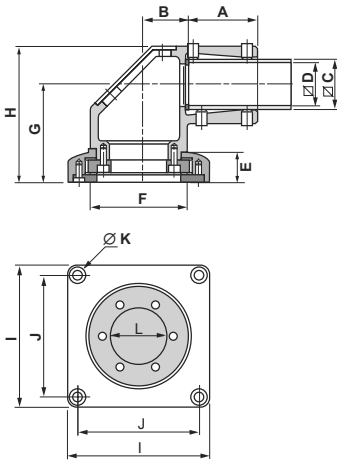

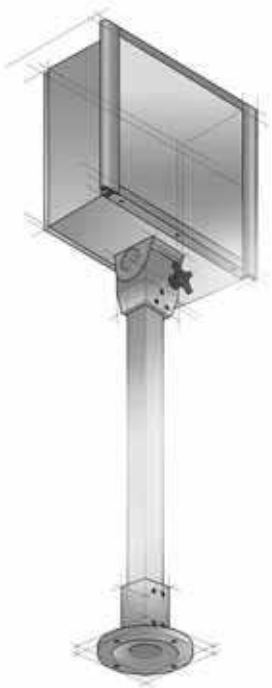

Example
Installation with tilting fixing on the enclosure and fixed base.

Composition
Inter-tube fitting



4 Horizontal inter-tube joint

- Device allowing the linking and rotation through 170º of 2 horizontal tubes, with a square section of 50 or 80 mm.
- Protection by bellows, RAL 7035 grey colour.
- Possibility of passing cables through the inside of the joint.
- Material: moulded steel, structured finish, powder, RAL 7040 grey colour.

Dimensions (mm)					Weight (kg)	References
⍁ A for tube	B	C	D	E		
50 mm square	42	236	67	148	4.25	**NSYCMUIA50**
80 mm square	72	320	94	190	10	**NSYCMUIA80**

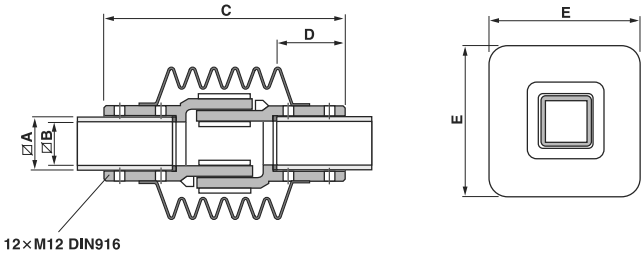



5 Fixed bracket

Our system of tubes and joints, fixed or rotating, enables all the solutions to respond to the installation needs of the control enclosures for human-machine dialogue. Every model is suitable for tubes with a square section of 50 mm for light loads, or of 80 mm for heavy loads (see selection table on page **2/62**).

- Device allowing the combination and fixing of a horizontal tube with a vertical tube.
- Two models for tubes with a square section of 50 or 80 mm.
- Option of passing cables through the inside.
- Material: aluminium, structured finish, powder, RAL 7040 grey colour.

Dimensions (mm)							Weight (kg)	Fixed bracket
⍁ G	A	B	C	D	E	F		References
50 mm square	144	46	60	60	46	42	1.35	**NSYCMUTC50**
80 mm square	193	56	83	83	56	70	2.4	**NSYCMUTC80**

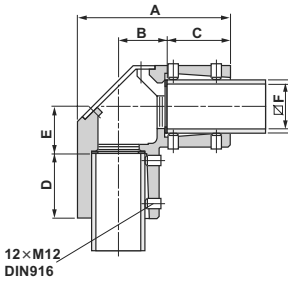

Composition
Inter-tube fitting

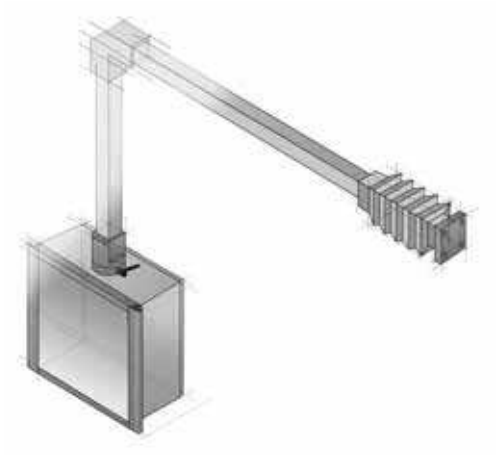

Example
Installation on enclosure with rotating straight fixing, fixed fitting bracket and support fixing with joint.



Installation example
Installation with rotating straight fixing on enclosure, inter-tube joint and rotating straight fitting.

Composition
Fixing on enclosure



6 Rotating fixing on enclosure

- Device allowing the fixing and rotation through 310º of tubes, with a square section of 50 or 80 mm, in vertical position.
- System for blocking in the chosen position.
- Option of passing cables through the inside.
- Material: aluminium, structured finish, powder, RAL 7040 grey colour.
- Fixing through the support surface by 4 screws.

Dimensions (mm)							Weight (kg)	References
Ø A	B	C	D	E	F	M		
50 mm square	42	115	96	52,3	58	M6	1.25	**NSYCMUCR50**
80 mm square	72	145	139	85	87	M8	3.1	**NSYCMUCR80**

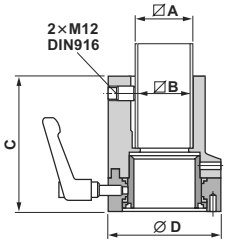

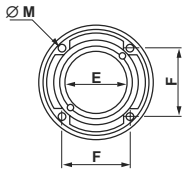

Composition
Fixing on enclosure



7 Rotating fixing in bracket on enclosure

- Devices allowing the fixing and rotation through 310º of tubes, with a square section of 50 or 80 mm, in horizontal position.
- System for blocking in the chosen position.
- Option of passing cables through the inside.
- Material: aluminium, structured finish, powder, RAL 7040 grey colour.
- Fixing through the support surface by 4 screws.

Dimensions (mm)										Weight (kg)	References
⌀ G	A	B	C	D	E	F	H	I	M		
50 mm square	154	46	60	147	96	42	42	58	M6	2	**NSYCMUCC50**
80 mm square	208.5	56	83	190	139	72	70	87	M8	6.55	**NSYCMUCC80**

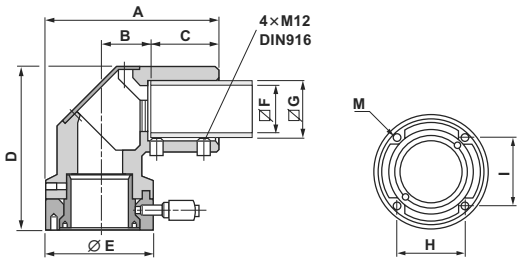

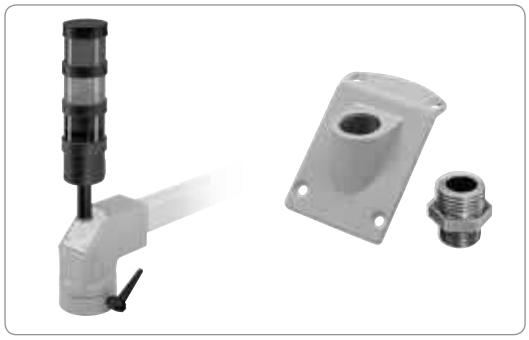

Adapter for signalling beacon

- This adapter allows the direct installation of a beacon for signalling the state of the machine.
- It is installed on fixed brackets ref. **NSYCMUTC50** and **NSYCMUTC80**.
- Option of passing cables through the inside.
- Material: aluminium, structured finish, powder, RAL 7040 grey colour.

Dimensions (mm)					Weight (kg)	References
⌀ E	A	B	C	D		
50 mm square	14	11	8.7	31.5	0.025	**NSYCMACS50**
80 mm square	14	11	2.5	43	0.08	**NSYCMACS80**

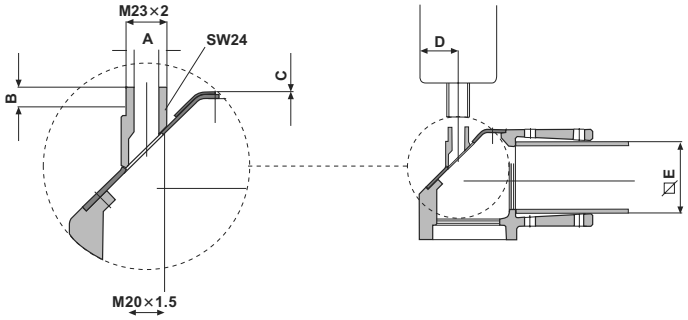

Composition
Fixing on enclosure



8 Tilting fixing on enclosure

- This fixing allows the enclosures to be tilted up to 30°.
- System for blocking in the chosen position.
- It is installed on enclosures with depths of 200 and 250 mm.
- The installation on enclosures with a depth of 300 mm requires an adapter plate.

Dimensions (mm)									Weight (kg)	References \ 50 mm
⍁ for tube	A	B	C	D	E	F	G	H		
50 mm square	50	55	100	44	121	182	50	100	2.98	**NSYCMUCP50**
80 mm square	50	55	100	44	121	182	50	100	3.10	**NSYCMUCP80**

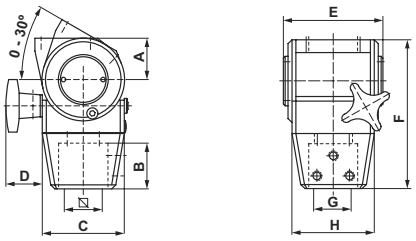



Adapter part for enclosure D300 / ∅ 80 mm

Reference
NSYCMUCPAD87

Composition
Length elements

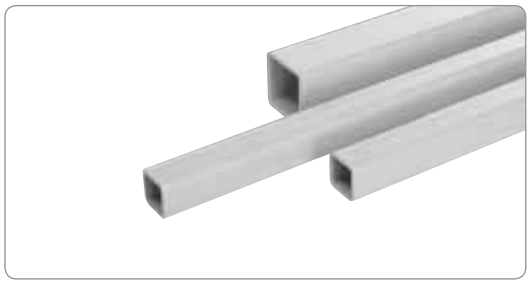

Tube

- The tubes are available in:
– 2 sizes: square of 50 and 80 mm,
– 4 lengths: 0.5, 1, 1.5 and 2 m.
- Material: extruded steel, 4 mm thick, structured finish, powder, RAL 7035 grey colour.
- Weights:
– 50 × 80: 6.5 kg / m.
– 80 × 80: 10.5 kg / m.

Joints		
References		
Length (m)	50 mm square	80 mm square
0.5	**NSYCMT5005**	**NSYCMT8005**
1	**NSYCMT5010**	**NSYCMT8010**
1.5	**NSYCMT5015**	**NSYCMT8015**
2	**NSYCMT5020**	**NSYCMT8020**

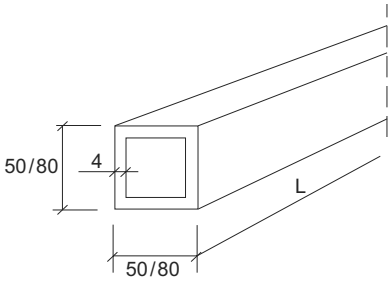



Specific

Cut-outs on front face: contact us.

