The Spacial S3DEX steel enclosure according to the ATEX directive

Aesthetics
New RAL 7035

Choice
With 10 sizes

Easy
Easily reversible door

Solid
Resistance to external mechanical impacts IK 10

Smart
1 operating point for 3 locking points from H600

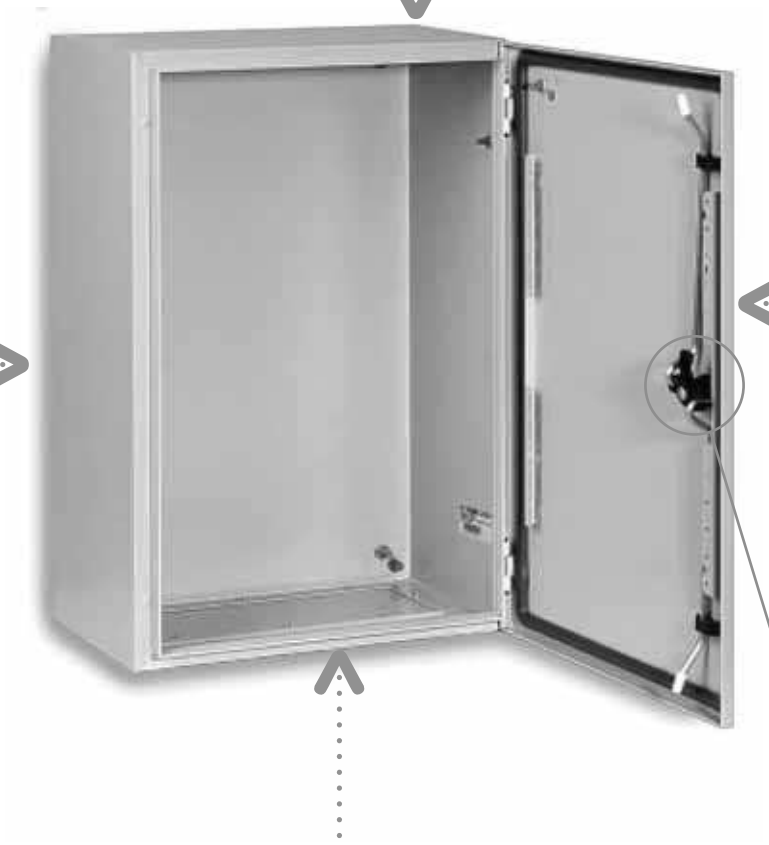



Aesthetics

- Sheet-steel enclosure.
- Structured finish, RAL 7035 grey colour.
- Single-piece body with a cross-shaped structure.

Solid

- Resistance to external mechanical impacts: IK 10.
- Protection degree: IP 66. Polyurethane gasket.
- Front rail of the body with double fold, gutter-shaped.

Choice

- Solid door: 10 references.

Smart

- 3-mm double-bar lock as standard.
- For heights exceeding 600 mm, three closure points with single operating point.

Easy

- The door can be removed and turned over to open towards the left.

Practical

- Large variety of common accessories with the Spacial wall-mounting enclosure range.

– Plain mounting plate.
– Silkscreened mounting plate.
– Microperforated mounting plate.
– Telequick mounting plate.
– DIN rail chassis.

- Reusable packaging.



Blind nut for external earth connection.



Earthing studs welded to the door and inside the body.



The mounting plate is mounted on four 10-mm shouldered backstuds.



The 4 fixing holes are blocked by 4 crimped blind nuts.



Example of specific ATEX marking.





Delivered in reusable cardboard with assembly instructions enclosed and wall installation template on the cardboard.

Introduction





Download our ATEX certificates and product sheets over the internet.

Technical characteristics

The Spacial S3DEX range of steel enclosures is certified by LCIE with no. LCIE 02ATEX0037U and codicil no. LCIE 02ATEX0037U/01 (component certificate).

The enclosures have the following marks:
Ⓔx II 2 GD Ex tD A21 IP6X according to ATEX directive 94/9/EC and standards EN 60079-0 (2004), EN 60079-7 (2006), EN 61241-0 (2005) and EN 61241-1 (2004).

Technical description

- Tightness by protection rating: IP 66 (enclosures with single door).
- Resistance to external impacts: IK 10.
- Structured finish, epoxy-polyester powder paint, RAL 7035 grey colour.

Compared with the universal Spacial wall-mounting enclosure, the Spacial S3DEX enclosure has:
- The four fixing holes blocked by four crimped blind nuts.
- One crimped M8 blind nut for an external earth connection (braid not supplied).

Enclosure body

- 4 M8 × 25 shouldered backstuds for mounting the mounting plate and the step slides leaving a space of 10 mm behind them.
- Cable-gland plate with grid pattern to facilitate drilling and provide the maximum access surface.
- Welded earthing stud for equipotential connection between the door and the body.

Door

- Standard enclosure supplied with a double-bar lock.
- Polyurethane sealing gasket.
- Equipotential connection between the door and the body by means of the M6 × 16 earthing screws.
- Removable and reversible door, opening to 120°.
- Simple reversal of linkage.
- Maximum load: 50 kg/m².
- Perforated rails on the door: 2 vertical rails from H = 400 mm, 2 vertical rails and 2 horizontal rails from W = 800 mm.

Ambient temperature limits:
–25 °C ≤ Ta ≤ +40 °C.

Delivered in an impact-resistant, eco-friendly packaging.




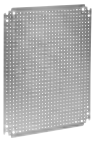





Enclosure dimensions (mm)			Enclosure reference	Mounting plates				Mixed symmetrical chassis	Bars slides	Fixing legs	
Height	Width	Depth		Plain	Silkscreened	Microperforated	Telequick			Steel	Stainless steel
300	200	150	**NSYS3DEX3215**	**NSYMM32**	-	-	**NSYMR32**	-	-	**NSYAEFPFSC**	**NSYAEFPFXSC**
300	300	200	**NSYS3DEX3320**	**NSYMM33**	-	**NSYMF33**	**NSYMR33**	**NSYMD33**	**NSYSDCR200**	**NSYAEFPFSC**	**NSYAEFPFXSC**
400	300	200	**NSYS3DEX4320**	**NSYMM43**	**NSYMS43**	**NSYMF43**	**NSYMR43**	**NSYMD43**	**NSYSDCR200**	**NSYAEFPFSC**	**NSYAEFPFXSC**
400	400	200	**NSYS3DEX4420**	**NSYMM44**	**NSYMS44**	**NSYMF44**	-	-	**NSYSDCR200**	**NSYAEFPFSC**	**NSYAEFPFXSC**
500	400	200	**NSYS3DEX5420**	**NSYMM54**	**NSYMS54**	**NSYMF54**	**NSYMR54**	**NSYMD54**	**NSYSDCR200**	**NSYAEFPFSC**	**NSYAEFPFXSC**
600	400	250	**NSYS3DEX6425**	**NSYMM64**	**NSYMS46**	**NSYMF64**	**NSYMR64**	**NSYMD64**	**NSYSDCR250**	**NSYAEFPFSC**	**NSYAEFPFXSC**
600	600	250	**NSYS3DEX6625**	**NSYMM66**	**NSYMS66**	**NSYMF66**	**NSYMR66**	**NSYMD66**	**NSYSDCR250**	**NSYAEFPFSC**	**NSYAEFPFXSC**
700	500	250	**NSYS3DEX7525**	**NSYMM75**	**NSYMS75**	**NSYMF75**	**NSYMR75**	**NSYMD75**	**NSYSDCR250**	**NSYAEFPFSC**	**NSYAEFPFXSC**
800	600	300	**NSYS3DEX8630**	**NSYMM86**	**NSYMS86**	**NSYMF86**	**NSYMR86**	**NSYMD86**	**NSYSDCR300**	**NSYAEFPFSC**	**NSYAEFPFXSC**
1000	800	300	**NSYS3DEX10830**	**NSYMM108**	-	**NSYMF108**	**NSYMR108**	**NSYMD108**	**NSYSDCR300**	**NSYAEFPFSC**	**NSYAEFPFXSC**

The accessories of the Spacial standard wall-mounting enclosures can be installed in the Spacial S3DEX wall-mounting enclosures. However, plastic accessories should not be used, due to the risk of a static charge.

Dimensions

A: Height
B: Width
C: Depth

(1) 4 M8 × 25 mm backstuds.
(2) 2 M6 × 17.5 mm earthing studs.
(3) Stud centre-to-centre distance.
(4) Crimped blind nut centre-to-centre distance.
(5) Blind nut for external earth.

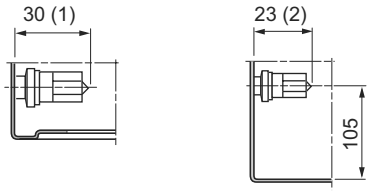

Detail (1) **Detail (2)**

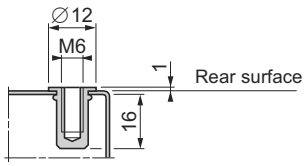

Detail (4)
4 crimped blind nuts for direct fixing of the fixing lugs

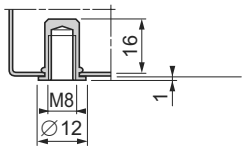

Detail (5)
1 crimped blind nut for the external earth

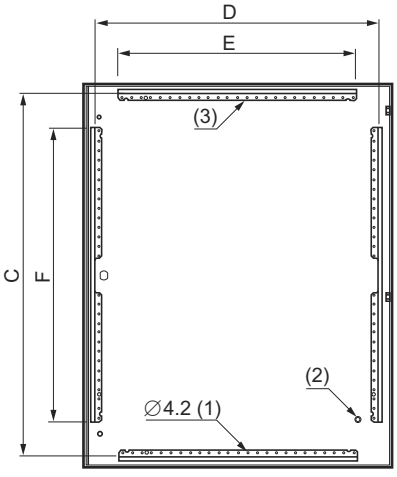

(1) Perforations with a pitch of 25 mm.
(2) 1 M6 × 17.5 mm earthing stud.

1-door enclosure

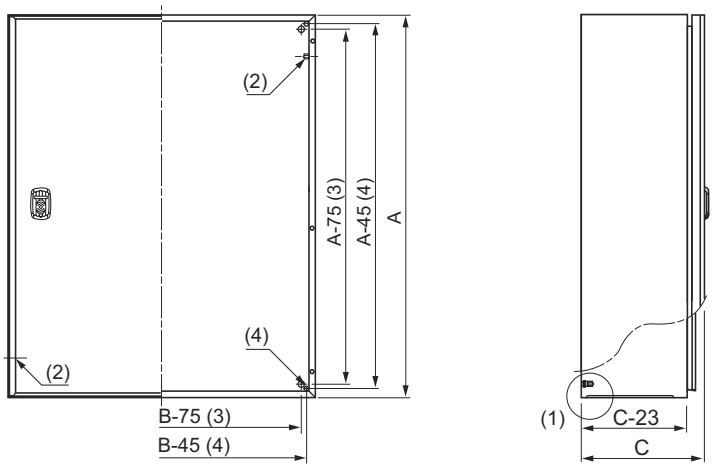

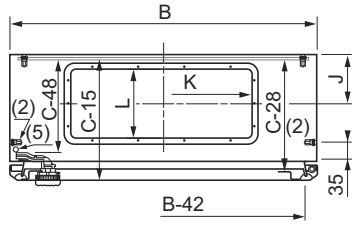

Enclosure (mm)		Cable-gland plate				
Width	Depth	Dimensions (mm)	No	J	K	L
200	150	140 × 80	1	57	115	55
300	200	245 × 130	1	80	220	105
400	200-250	345 × 130	1	80	320	105
500	250	445 × 130	1	80	420	105
600	250	545 × 130	1	80	520	105
600	300	495 × 220	1	126	470	195
800	300	345 × 130	2	80	320	105

Perforated rails on the door

Enclosure (3) (mm)		Perforated rails on the door (mm)			
Height (A)	Width (B)	Vertical		Horizontal	
		F	D	E	C
400	300	320	237	-	-
400	400	320	337	-	-
600	400	370	337	-	-
600	600	370	537	-	-
700	500	470	437	-	-
800	600	570	537	-	-
1000	800	770	737	620	949

(3) The doors of enclosures with dimensions of less than 800 × 600 mm do not have horizontal wire guides.