Contents

1 - Soft starters for asynchronous motors

Selection guide . . . . . *page 1/2*

Altistart 01

■ **Soft starters** for asynchronous motors
from 0.37 to 11 kW *(0.5 to 15 HP)* . . . . . *page 1/8*

■ **Soft start/soft stop units** for asynchronous motors
from 0.75 to 75 kW *(1 to 100 HP)* . . . . . *page 1/8*

■ Combinations

- 400 V power supply, type 1 coordination . . . . . *page 1/18*
- 690 V power supply, type 1 coordination . . . . . *page 1/19*

Altistart U01 and TeSys U

■ **Soft start/soft stop units** for asynchronous motors
from 0.75 to 15 kW *(1 to 20 HP)* . . . . . *page 1/24*

■ TeSys U starter and soft start unit combinations . . . . . *page 1/24*

Altistart 48

■ Selection criteria . . . . . *page 1/36*

■ **Soft start/soft stop units** for 230/415 V line voltage

- Connection in the motor supply line . . . . . *page 1/40*
- Connection to the motor delta terminals . . . . . *page 1/41*

■ **Soft start/soft stop units** for 208/690 V line voltage

- Motor power in HP . . . . . *page 1/42*
- Motor power in kW . . . . . *page 1/43*

■ Options

- Remote terminal . . . . . *page 1/45*
- Line chokes . . . . . *page 1/45*
- DNV kits . . . . . *page 1/45*
- Protective covers . . . . . *page 1/45*
- Documentation . . . . . *page 1/45*
- Communication options . . . . . *page 1/47*

■ Combinations . . . . . *page 1/60*

■ Functions . . . . . *page 1/70*

Soft starters for asynchronous motors

Applications		Starting simple machines	Soft starting and deceleration of simple machines
			
Power range for 50…60 Hz supply (kW)		**0.37…11**	**0.75…75**
	Single phase 110…230 V (kW)	0.37…2.2	–
	3-phase 200…240 V (kW)	–	0.75…7.5
	3-phase 200…480 V (kW)	0.37…11	–
	3-phase 230…415 V (kW)	–	–
	3-phase 208…690 V (kW)	–	–
	3-phase 230…690 V (kW)	–	7.5…75
	3-phase 380…415 V (kW)	–	1.5…15
	3-phase 400 V (kW)	–	22…45
Drive	Output frequency	–	
	Type of control	–	
	Transient overtorque	–	
Functions			
Number of functions		1	
Number of preset speeds		–	
Number of I/O	Analog inputs	–	
	Logic inputs	–	
	Analog outputs	–	
	Logic outputs	–	
	Relay outputs	–	
Communication	Integrated	–	
	Available as an option	Combined with TeSys U controller-starter	
Standards and certifications		IEC/EN 60947-4/2 CE, UL, CSA, C-Tick, CCC, GOST	
References		**ATS 01N1●●FT**	**ATS 01N2●●●●**
Pages		1/8	

Soft starting and deceleration of pumping and ventilation machines



3…900	
–	–
–	–
–	–
3…710	–
–	3…900
–	–
–	–
–	–

–
TCS (Torque Control System)
–

36
–
1 PTC probe
4
1
2
3

Modbus
Fipio, Profibus DP, DeviceNet, Ethernet TCP/IP

IEC/EN 60947-4-2, EMC class A or B CE, UL, CSA, DNV, C-Tick, GOST, CCC, NOM 117, SEPRO, TCF

ATS 48●●●Q	ATS 48●●●Y
1/40 to 1/43	

Soft starters for asynchronous motors
Altistart 01

563783

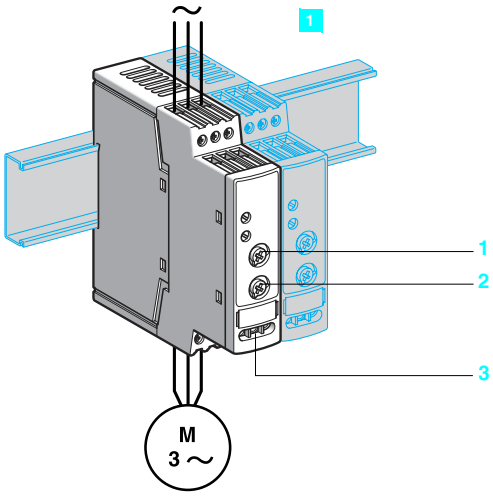

DF563892

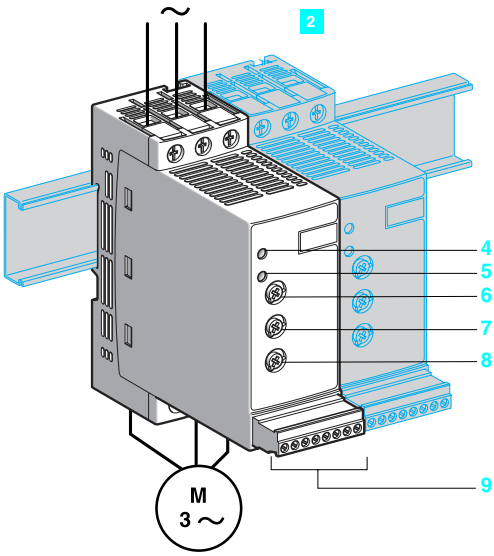

Presentation

The Altistart 01 soft starter operates either as a torque limiter on starting, or as a soft start/soft stop unit for asynchronous motors.
Using the Altistart 01 starter enhances the starting performance of asynchronous motors by allowing them to start gradually, smoothly and in a controlled manner. It prevents mechanical shocks, which lead to wear and tear, and subsequent maintenance work and production downtime.
The Altistart 01 limits the starting torque and current peaks on starting on machines which do not require a high starting torque.
It is designed for the following simple applications:
- Conveyors
- Conveyor belts
- Pumps
- Fans
- Compressors
- Automatic doors and gates
- Small cranes
- Belt-driven machinery, etc.

The Altistart 01 is compact, easy to install and can be mounted side-by-side. It complies with standards IEC/EN 60947-4-2, carries UL, CSA, C-Tick, CCC and GOST certifications and CE marking.
The Altistart 01 soft start/soft stop unit offer comprises 3 ranges:

■ 1 **ATS 01N1●●●** soft starters
- Control one phase of the motor power supply (single phase or three phase) to limit the starting torque
- Internal bypass relay
- Motor power ratings ranging from 0.37 kW to 11 kW
- Motor supply voltages ranging from 110 V to 480 V, 50/60 Hz. An external power supply is required for controlling the starter.

A contactor is always required to switch off the motor.

■ 2 **ATS 01N2●●●** soft start/soft stop units
- Control two phases of the motor power supply to limit the starting current and for deceleration
- Internal bypass relay
- Motor power ratings ranging from 0.75 kW to 75 kW
- The motor supply voltages are as follows: 230 V, 400 V, 480 V and 690 V, 50/60 Hz

The use of a line contactor is not necessary on machines where electrical isolation is not required.

■ **ATSU 01N2●●●** soft start/soft stop units
See pages 1/20 and 1/27.

Description

■ Altistart 01 soft starters (ATS 01N1●●●) are equipped with:
- A potentiometer 1 for setting the starting time
- A potentiometer 2 for adjusting the start voltage threshold according to the motor load
- Two inputs 3:
  - One 24 V ⎓ input or one 110…240 V ∿ for powering the control part that controls the motor

■ Altistart 01 soft start/soft stop units (ATS 01N2●●●) are equipped with:
- A potentiometer 6 for setting the starting time
- A potentiometer 8 for setting the deceleration time
- A potentiometer 7 for adjusting the start voltage threshold according to the motor load
- 1 green LED 4 to indicate that the unit is switched on
- 1 yellow LED 5 **to indicate that the motor is powered at nominal voltage, if it is connected to the starter**
- A connector 9:
  - 2 logic inputs for Run/Stop commands
  - 1 logic input for the BOOST function
  - 1 logic output to indicate the end of starting
  - 1 relay output to indicate the motor has reached a standstill at the end of the deceleration stage

Characteristics: pages 1/6 and 1/7 | References: page 1/8 | Dimensions: page 1/9 | Schemes: pages 1/10 to 1/17

Soft starters for asynchronous motors
Altistart 01

Description (continued)

Equivalence table for contact references

Functions	ATS 01N2●●LU/QN/RT	ATS 01N2●●LY	ATS 01N2●●Q
Relay outputs	R1A	04	04
	R1C	05	05
External power supply 0 V	C0M	–	–
Stop command	LI1	02	02
Run command	LI2	03	03
Control section power supply	LI + (+ 24 V positive logic)	01 (0 V negative logic)	01 (0 V negative logic)
BOOST	BOOST	–	–
End of starting	LO1	–	–
115 V external power supply	–	06	–
	–	07	–

Functions

■ 2-wire control

The run and stop commands are controlled by a single logic input. State 1 of logic input LI2 controls starting and state 0 controls stopping.

ATS 01N2●●LU/QN/RT

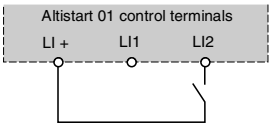

Wiring diagram for 2-wire control

ATS 01N2●●LY/Q

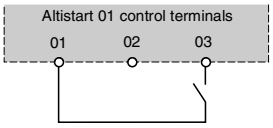

Wiring diagram for 2-wire control

■ 3-wire control

The run and stop commands are controlled by 2 different logic inputs.
Stopping is achieved when logic input LI1 opens (state 0).
The pulse on input LI2 is stored until input LI1 opens.

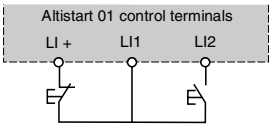

Wiring diagram for 3-wire control

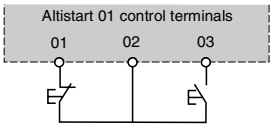

Wiring diagram for 3-wire control

■ Starting time

Controlling the starting time means that the time of the voltage ramp applied to the motor can be adjusted to obtain a gradual starting time, dependent on the motor load.

■ Voltage boost function via logic input

Activating the BOOST logic input enables the function for supplying a starting overtorque capable of overcoming any mechanical friction.
When the input is at state 1, the function is active (input connected to the + 24 V) and the starter applies a fixed voltage to the motor for a limited time before starting.

■ End of starting

□ Application function via logic output LO1

Soft start/soft stop units ATS 01N206●● to ATS 01N232●● are equipped with an open collector logic output LO, which indicates the end of starting when the motor has reached nominal speed.

□ Application function via an option

For ATS 01N2●●LY/Q soft start/soft stop units, end of starting information can be obtained by adding the option LAD 8N11 with N/O+N/C contacts.
The option can be connected easily to the bypass contactor of the electronic(s) unit without dismantling the product.

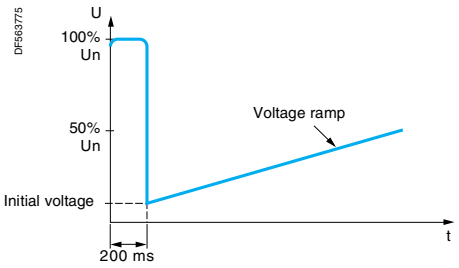

Application of a voltage boost equal to 100% of the nominal motor voltage

Soft starters for asynchronous motors
Altistart 01

Environment characteristics

Type of starter			ATS 01N1●●FT, ATS 01N2●●LU (1), ATS 01N2●●QN, ATS 01N2●●RT	ATS 01N2●●LY and ATS 01N2●●Q
Conforming to standards			Altistart 01 electronic starters have been developed to conform to the strictest international standards and the recommendations relating to electrical industrial control devices (IEC, EN), in particular standard IEC/EN 60947-4-2	
Electromagnetic compatibility EMC	Conducted and radiated emissions		CISPR 11 level B, IEC 60947-4-2, level B	CISPR 11 level B (only with Bypass), IEC 60947-4-2, level B
	Harmonics		IEC 1000-3-2, IEC 1000-3-4	
	EMC immunity		EN 50082-2, EN 50082-1	
	Electrostatic discharge		IEC 61000-4-2 level 3	
	Immunity to radiated radio-electrical interference		IEC 61000-4-3 level 3	
	Immunity to electrical transients		IEC 61000-4-4 level 4	
	Voltage/current impulse		IEC 61000-4-5 level 3	
	Immunity to conducted interference caused by radio-electrical fields		IEC 61000-4-6 level 3	
	Micro-cuts and voltage fluctuation		IEC 61000-4-11	
	Damped oscillating waves		IEC 61000-4-12 level 3	
CE marking			Bear CE marking in accordance with the European low voltage directives IEC/EN 60947-4-2	
Product certifications			UL, CSA, C-Tick, CCC and GOST B44.1-96/ASME A17.5 for starter wired to the motor delta terminal	
Degree of protection			IP 20	IP 20 on front panel
Degree of pollution			2 conforming to IEC/EN 60947-4-2	3 conforming to IEC 60664-1 and UL 508
Vibration resistance			1.5 mm peak to peak from 3 to 13 Hz, 1 gn from 13 to 150 Hz conforming to IEC/EN 60068-2-6	2 gn
Shock resistance			15 gn for 11 ms conforming to IEC/EN 60068-2-27	8 gn for 11 ms conforming to IEC/EN 60068-2-27
Relative humidity			5...95% without condensation or dripping water, conforming to IEC/EN 60068-2-3	
Ambient air temperature around the device	Storage	°C	- 25…+ 70 conforming to IEC/EN 60947-4-2	- 25…+ 70 conforming to IEC/EN 60947-4-2
	Operation	°C	- 10…+ 40 without derating, up to 50°C with current derating of 2% per °C above 40°C	0…+ 55
Maximum operating altitude		m	1000 without derating (above this, derate the current by 2.2% per additional 100 m)	2000 without derating (above this, derate the current by 0.5% per additional 100 m)
Operating position Maximum permanent angle in relation to the normal vertical mounting position			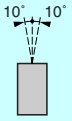	

Electrical characteristics

Type of starter	ATS		01N1●●FT	01N2●●LU	01N2●●QN	01N2●●RT	01N2●●LY	01N2●●Q
Category of use	Conforming to IEC 60947-4-2		Ac-53b					
Rated operating voltage	Three-phase voltage	V	110 - 15% to 480 + 10%	200 - 15% to 240 + 10%	380 - 15% to 415 + 10%	440 - 15% to 480 + 10%	230 - 15% to 690 + 10%	400 -15…+ 10%
Frequency		Hz	50 - 5% to 60 + 5%					
Output voltage			Maximum 3-phase voltage equal to line supply voltage.					
Control power supply voltage		V	∿ 110...220 ± 10% ⎓ 24 ± 10%	Built into the starter			∿ 110 ± 10%	Built into the starter
Rated operating current		A	3...25	6...32			32...85	
Adjustable starting time		s	1...5	1...10			1...25	
Adjustable deceleration time		s	–	1...10			1...25	
Starting torque		%	30...80% of starting torque of motor connected directly on the line supply					

Type of starter	ATS		01N1●●FT		01N206●● to 01N222●●			01N232●●			01N2●●LY, 01N2●●Q	
Use												
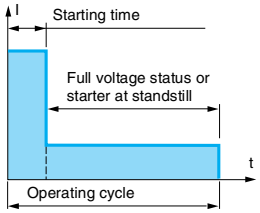	Starting time	s	1	5	1	5	10	1	5	10	1	12
	Maximum number of cycles per hour		100	20	100	20	10	50	10	5	360	30

(1) For the 230...415 V range, ATS 01N2●●LV starters can be connected to the motor delta terminals to reduce the starter rating.

Presentation: pages 1/4 and 1/5
References: page 1/8
Dimensions: page 1/9
Schemes: pages 1/10 to 1/17

Soft starters for asynchronous motors
Altistart 01

Electrical characteristics (continued)

Type of starter		ATS 01N1		03FT	06FT	09FT	12FT	25FT
Control power supply consumption				⎓ 24 V, 25 mA, ∿ 110 V, 30 mA ∿ 240 V, 65 mA		⎓ 24 V, 30 mA, ∿ 110 V, 35 mA, ∿ 240 V, 80 mA		
Power dissipated	At full load at end of starting		W	4	1	1	1	1
	In transient state		W	19	31	46	61	126
Current at nominal load *(1)*			A	15	30	45	60	125
Type of starter		**ATS 01N2**		**06LU/QN/RT**	**09LU/QN/RT**	**12LU/QN/RT**	**22LU/QN/RT**	**32LU/QN/RT**
Power dissipated	At full load at end of starting		W	4	4	4	4.5	4.5
	In transient state		W	64	94	124	224.5	324.5
Current at nominal load *(1)*			A	30	45	60	110	160
Type of starter		**ATS 01N2**		**30LY/Q**	**44LY/Q**	**72LY/Q**	**85LY/Q**	
Power dissipated	At full load at end of starting		W	22	22	23	23	
	In transient state		W	184	268	436	514	
Current at nominal load *(1)*			A	90	132	216	255	
Type of starter		**ATS 01N2**		**●●LU/QN/RT**			**●●LY/Q**	
Logic input power supply: For LI1, LI2 and BOOST only (electrically isolated between power and control) **LI +, COM**				24 V power supply Max. current available 10 mA. No short-circuit and overload protection			–	
Logic inputs **LI1, LI2, BOOST (01, 02, 03 for ATS 01N2●● LY/Q)** Stop, run and boost on start-up functions				Logic inputs with impedance 27 kΩ 24 V power supply (U max. 40 V) Max. current consumption 8 mA State 0 if U < 5 V and I < 0.2 mA State 1 if U > 13 V and I > 0.5 mA			Input with internal control relay, internal 24 V power supply Max. current 8 mA State 0 if I < = 3 mA State 1 if I > = 10 mA	
Logic output LO1 End of starting signal				Open collector logic output External 24 V power supply (min. 6 V, max. 30 V) Max. current 200 mA			–	
Relay outputs **R1A R1C (04, 05 for ATS 01N2●● LY/Q)**				Normally open (N/O) contact Minimum switching capacity: 10 mA for ⎓ 6 V Max. switching capacity on inductive load (cos φ = 0.5 and L/R = 20 ms): 2 A for ∿ 250 V or ⎓ 30 V (AC-15) Max. operating voltage 440 V			Operating category AC-15: Ie 3 A, Ue 250 V, DC-13: Ie 2 A, Ue 24 V, Minimum switching capacity: 10 mA for ⎓ 17 V Maximum operating voltage 250 V	
LED signalling	Green LED			Starter powered up				
	Yellow LED			Nominal voltage reached				

(1) Acceleration current complying with the maximum conditions of use (see page 1/6).

Connections (Maximum connection capacity and tightening torque)

Type of starter		ATS		01N103FT, 01N106FT	01N109FT, 01N112FT, 01N125FT, 01N206●● to 01N232●●	01N2●●LY and 01N2●●Q
Power circuit				Cage type connector	Connection via Ø 4 mm screw clamp	
Flexible wire without cable end	1 conductor		mm²	2.5 14 AWG	1.5…10 8 AWG	6...25
	2 conductors		mm²	1 17 AWG	1.5…6 10 AWG	6...25
Flexible wire with cable end	1 conductor		mm²	2.5 14 AWG	1…6 10 AWG	4...25
	2 conductors		mm²	0.75 18 AWG	1…6 10 AWG	4...16
Rigid wire	1 conductor		mm²	2.5 14 AWG	1…10 8 AWG	6...35
	2 conductors		mm²	1 17 AWG	1…6 10 AWG	6...25
Tightening torque			N.m	0.8	1.9…2.5	5
Control circuit				Cage type connector	Screw connector	
Flexible wire without cable end	1 conductor		mm²	2.5 14 AWG	0.5…2.5 14 AWG	0.75...1.5
	2 conductors		mm²	1 17 AWG	0.5…1.5 16 AWG	0.75...1.5
Flexible wire with cable end	1 conductor		mm²	2.5 14 AWG	0.5…1.5 16 AWG	0.75...1.5
	2 conductors		mm²	0.75 18 AWG	0.5…1.5 16 AWG	0.75...1.5
Rigid wire	1 conductor		mm²	2.5 14 AWG	0.5…2.5 14 AWG	0.75...1.5
	2 conductors		mm²	1 17 AWG	0.5…1 17 AWG	0.75...1.5
Earth connection				–	–	Tinned connector. Fixed using Ø 6 screws
Tightening torque			N.m	0.8	0.5	0.7

Torque characteristics (typical curves)

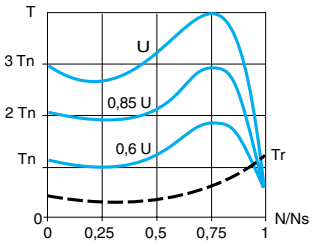

The diagram opposite shows the torque/speed characteristic of a cage motor in relation to the supply voltage.
The torque varies in line with the square of the voltage at a fixed frequency.
The gradual increase in the voltage prevents the instantaneous current peak on power-up.

Presentation: pages 1/4 and 1/5
References: page 1/8
Dimensions: page 1/9
Schemes: pages 1/10 to 1/17

Soft starters for asynchronous motors
Altistart 01

DF563901



ATS 01N103FT

DF563902



ATS 01N212QN

DF563903



ATS 01N230LY

Soft starters for 0.37 to 11 kW motors

Motor						Starter		
Motor power *(1)*						Nominal current	Reference *(2)*	Weight
Single phase		3-phase						
230 V	210 V	230 V	230 V	400 V	460 V			
kW	*HP*	kW	*HP*	kW	*HP*	A		kg
Single phase 110…230 V or 3-phase 110…480 V supply voltage, 50/60 Hz								
0.37	–	0.37	*0.5*	1.1	*0.5*	3	**ATS 01N103FT**	0.160
	–	0.55	–	–	*1.5*			
0.75	*0.5*	0.75	*1*	2.2	*2*	6	**ATS 01N106FT**	0.160
	–	1.1	*1.5*	3	*3*			
1.1	*1*	1.5	*2*	4	*5*	9	**ATS 01N109FT**	0.280
1.5	*1.5*	2.2	*3*	5.5	*7.5*	12	**ATS 01N112FT**	0.280
2.2	*2*	3	*5*	7.5	*10*	25	**ATS 01N125FT**	0.350
	3	4	*7.5*	9	*15*			
		5.5		11				

Soft start/soft stop units for 0.75 to 15 kW motors *(3)*

Motor		Starter		
Motor power *(1)*		Nominal current	Reference *(2)*	Weight
kW	*HP*	A		kg
3-phase supply voltage: 200…240 V 50/60 Hz				
0.75/1.1	*1/1.5*	6	**ATS 01N206LU**	0.420
1.5	*2*	9	**ATS 01N209LU**	0.420
2.2/3	*3/–*	12	**ATS 01N212LU**	0.420
4/5.5	*5/7.5*	22	**ATS 01N222LU**	0.560
7.5	*10*	32	**ATS 01N232LU**	0.560
3-phase supply voltage: 380…415 V 50/60 Hz				
1.5/2.2/3	–	6	**ATS 01N206QN**	0.420
4	–	9	**ATS 01N209QN**	0.420
5.5	–	12	**ATS 01N212QN**	0.420
7.5/11	–	22	**ATS 01N222QN**	0.560
15	–	32	**ATS 01N232QN**	0.560
3-phase supply voltage: 440…480 V 50/60 Hz				
–	*2/3*	6	**ATS 01N206RT**	0.420
–	*5*	9	**ATS 01N209RT**	0.420
–	*7.5*	12	**ATS 01N212RT**	0.420
–	*10/15*	22	**ATS 01N222RT**	0.560
–	*20*	32	**ATS 01N232RT**	0.560

Soft start/soft stop units for 15 to 75 kW motors

3-phase supply voltage: 230…690 V 50/60 Hz

Motor							Starter		
Motor power *(1)*							Nominal current	Reference *(2)*	Weight
230 V	230 V	400 V	400 V	460 V	575 V	690 V			
kW	*HP*	kW	*HP*	*HP*	*HP*	kW	A		kg
7.5	*10*	*15*	*15*	*20*	*30*	30	32	**ATS 01N230LY**	2.400
11	*15*	*22*	*25*	*30*	*40*	37	44	**ATS 01N244LY**	2.400
18.5	*25*	37	*40*	*50*	*60*	55	72	**ATS 01N272LY**	3.800
22	*30*	45	*50*	*60*	*75*	75	85	**ATS 01N285LY**	3.800

3-phase supply voltage: 400 V 50/60 Hz *(3)*

Motor		Starter		
Motor power *(1)*		Nominal current	Reference *(2)*	Weight
kW	*HP*	A		kg
22	*25*	44	**ATS 01N244Q**	2.400
37	*40*	72	**ATS 01N272Q**	3.800
45	*50*	85	**ATS 01N285Q**	3.800

(1) Standard power ratings of motors, HP power ratings indicated according to standard UL 508.
(2) For thermal protection of the motor, please use a thermal circuit-breaker GV● ME or GV7 RE (see combinations pages 1/18 and 1/19).
(3) Control power supply built into the starter.

Presentation: pages 1/4 and 1/5
Characteristics: pages 1/6 and 1/7
Dimensions: page 1/9
Schemes: pages 1/10 to 1/17

Soft starters for asynchronous motors
Altistart 01

References *(continued)*

Accessories

Description	Used for starter	Reference	Weight kg
Plate for quick mounting on DIN rail	ATS 01N230LY, ATS 01N244●	**VY1 H4101**	–
Adaptor for mounting on ⊔ DZ5 MB rail	ATS 01N103FT, ATS 01N106FT	**RHZ 66**	0.005
Auxiliary contact, provides information that the motor is at full voltage	ATS 01N2●●●LY, ATS 01N2●●●Q	**LAD 8N11**	–

Dimensions

ATS 01N103FT, ATS 01N106FT

Mounting on ⊓ (35 mm) rail or ⊔ rail with adaptor RHZ 66

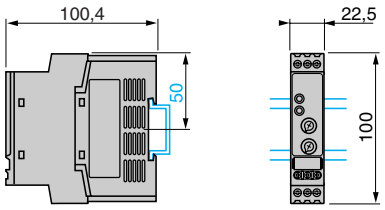

ATS 01N109FT, ATS 01N112FT, ATS 01N125FT

Mounting on ⊓ (35 mm) rail | **Screw fixing**

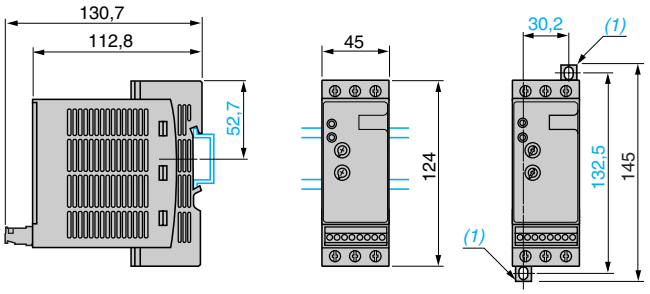

(1) Retractable fixings

ATS 01N206●● to ATS 01N212●●

Mounting on ⊓ (35 mm) rail | **Screw fixing**

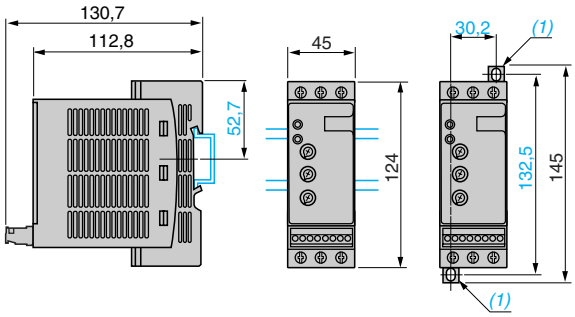

(1) Retractable fixings

ATS 01N222●● to ATS 01N232●●

Mounting on ⊓ (35 mm) rail | **Screw fixing**

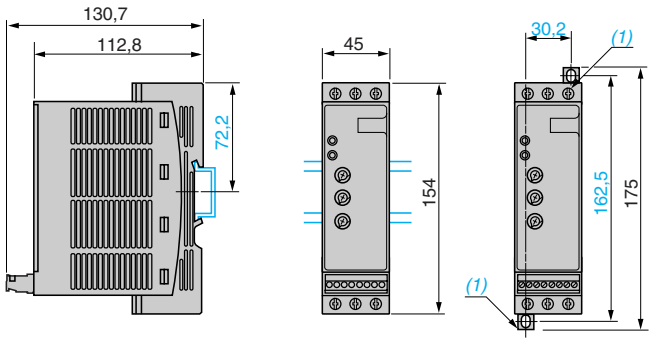

(1) Retractable fixings

ATS 01N230LY, ATS 01N244LY, ATS 01N244Q

Quick mounting on ⊓ rail (35 or 70 mm) using plate VY1 H4101 *(1)*

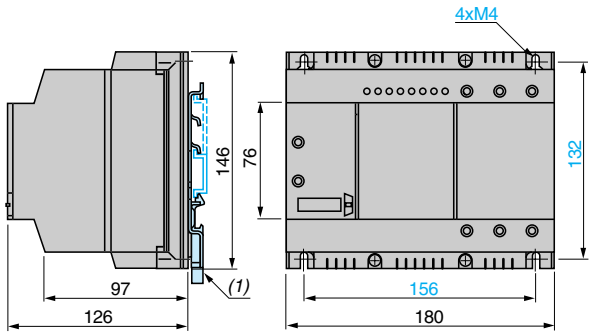

ATS 01N272LY, ATS 01N285LY, ATS 01N272Q, ATS 01N285Q

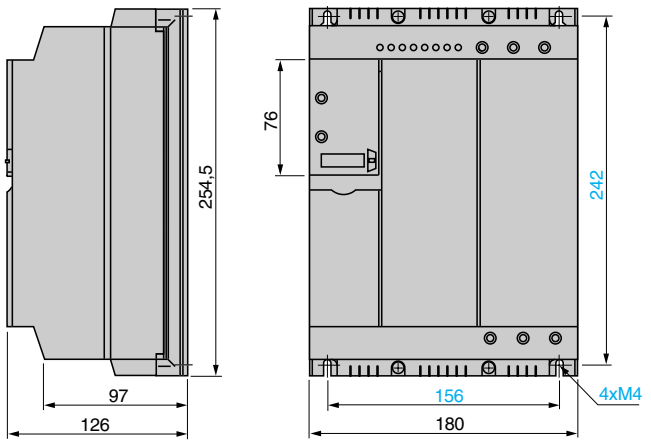

Soft starters for asynchronous motors
Altistart 01
For 0.37 to 11 kW motors

ATS 01N1●●FT soft starters
Single-phase or 3-phase power supply

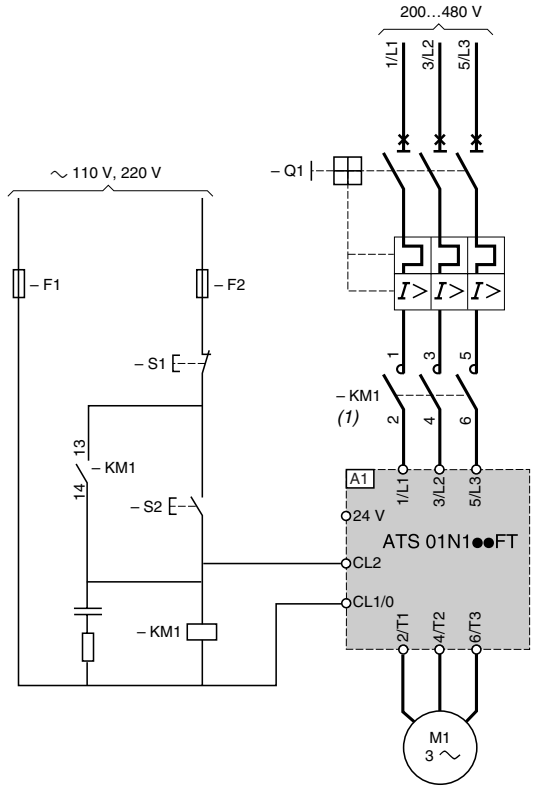

Note : *For single-phase motors, use the ATS 01N1●●FT without connecting the 2nd phase 3/L2, 4/T2.*
Wait 5 seconds after switching the soft starter off before switching it on again.

(1) A line contactor must be used in the sequence.

Compatible components (for full references, see pages 1/18 and 1/19 or refer to our catalogue: “Motor starter solutions - Control and protection components”.)

Code	Description
A1	Soft starter
Q1	GV2 ME circuit-breaker
KM1	LC1 ●●● + LA4 DA2U
F1, F2	Control protection fuses
S1, S2	XB4 B or XB5 B pushbuttons

Function chart

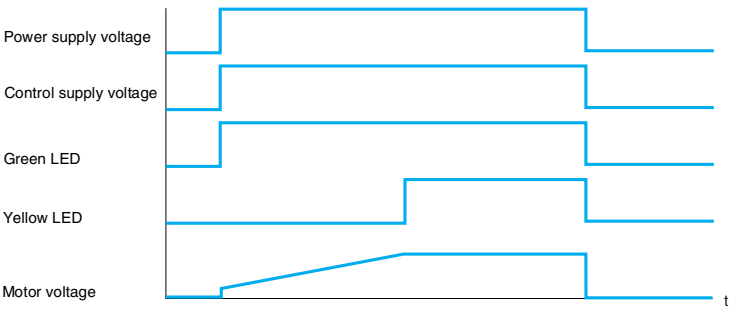

Soft starters for asynchronous motors
Altistart 01
For 0.75 to 15 kW motors

ATS 01N2●●LU/QN/RT soft start/soft stop units

Manual control without deceleration (freewheel), with GV2 and GV3 motor circuit-breakers

ATS 01N206●● to ATS 01N232●●

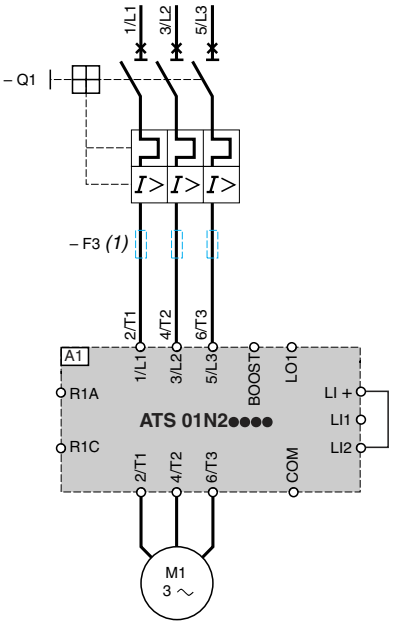

Automatic control with reversal of operating direction, without deceleration (freewheel)

ATS 01N206●● to ATS 01N232●●

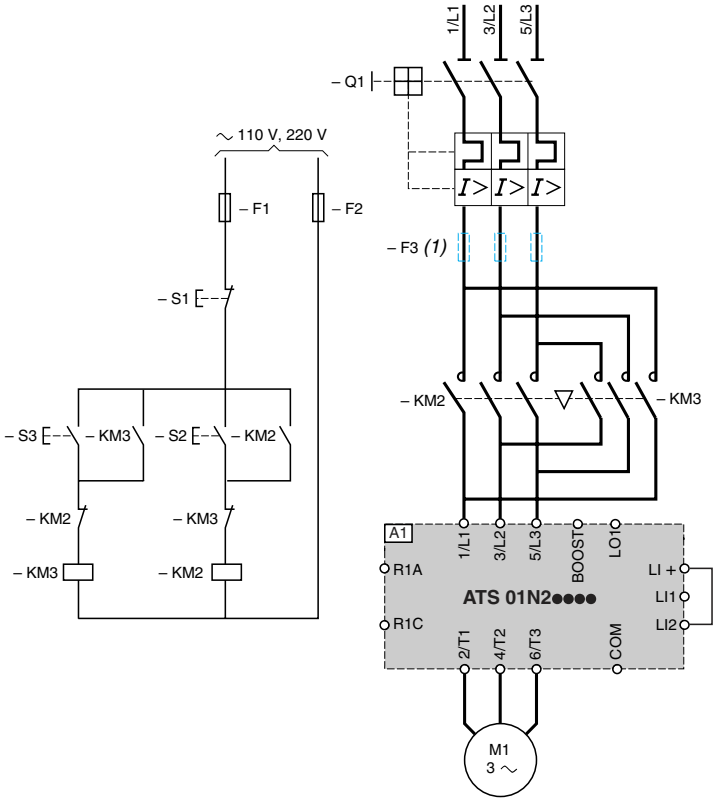

(1) For type 2 coordination.

Compatible components (for full references, see pages 1/18 and 1/19 or refer to our catalogue: “Motor starter solutions - Control and protection components”.)

Code	Description
A1	Soft start/soft stop unit
Q1	GV2 ME circuit-breaker
KM1, KM2, KM3	LC1 ●●● + LA4 DA2U
F1, F2	Control protection fuses
F3	3 fast-acting fuses
S1, S2, S3	XB4 B or XB5 B pushbuttons

Soft starters for asynchronous motors
Altistart 01
For 0.75 to 15 kW motors

ATS 01N2●●LU/QN/RT soft start/soft stop units

Automatic control with or without deceleration (freewheel), without contactor

ATS 01N206●● to ATS 01N232●●

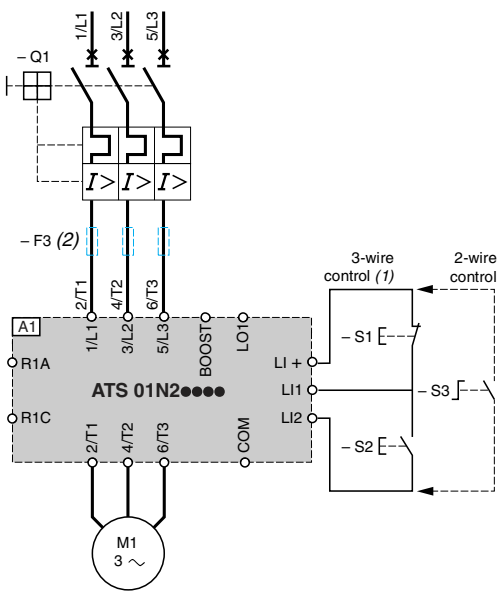

Automatic control with or without deceleration (freewheel), with contactor

ATS 01N206●● to ATS 01N232●●

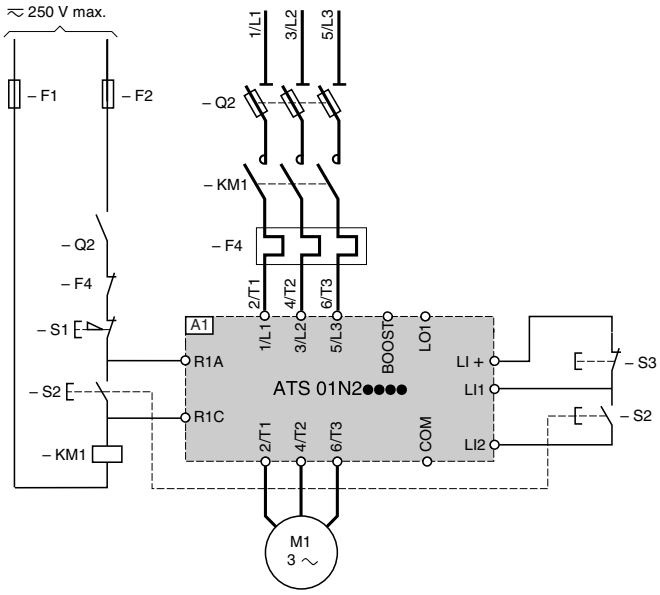

(1) Use shielded wires above 1 m.
(2) For type 2 coordination.

Compatible components (for full references, see pages 1/18 and 1/19 or refer to our catalogue: "Motor starter solutions - Control and protection components".)

Code	Description
A1	Soft start/soft stop unit
Q1	GV2 ME circuit-breaker
Q2	Fuse switches
F4	Thermal overload relay
KM1	LC1 ●●● + LA4 DA2U
F1, F2	Control protection fuses
F3	3 fast-acting fuses
S1, S2, S3	XB4 B or XB5 B pushbuttons

Function charts

2-wire control with deceleration

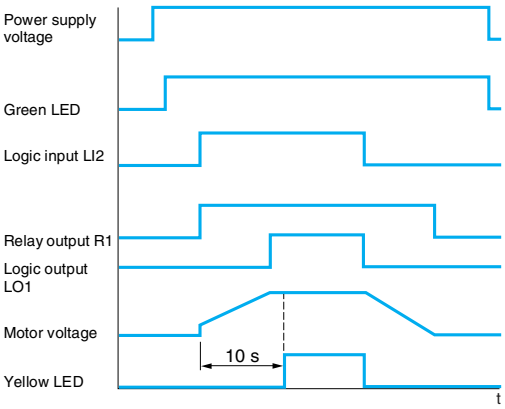

3-wire control with deceleration

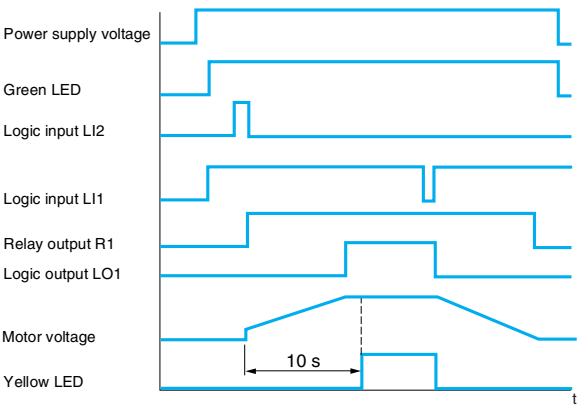

Soft starters for asynchronous motors
Altistart 01
For 0.75 to 15 kW motors

ATS 01N2●●LU/QN/RT soft start/soft stop units

Automatic control without deceleration (freewheel), with a maintaining function

ATS 01N206●● to ATS 01N232●●

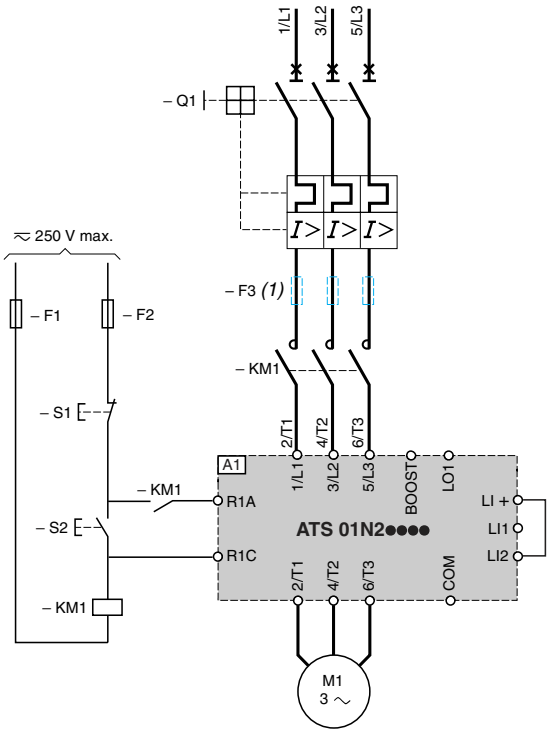

(1) For type 2 coordination.

Compatible components (for full references, see pages 1/18 and 1/19 or refer to our catalogue: "Motor starter solutions - Control and protection components".)

Code	Description
A1	Soft start/soft stop unit
Q1	GV2 ME circuit-breaker
KM1	LC1 ●●● + LA4 DA2U
F1, F2	Control protection fuses
F3	3 fast-acting fuses
S1, S2	XB4 B or XB5 B pushbuttons

Soft starters for asynchronous motors
Altistart 01
For 15 to 75 kW motors

ATS 01N2●●LY and ATS 01N2●●Q soft start/soft stop units (compatible components, see page 1/15)

Manual control without deceleration (freewheel), with GV3 and GV7 motor circuit-breakers

ATS 01N230LY to ATS 01N285LY

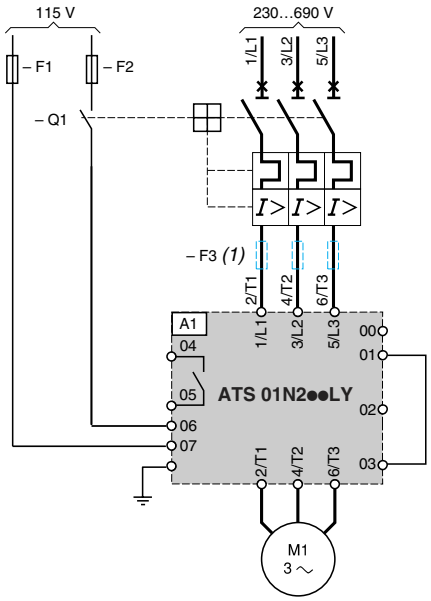

(1) For type 2 coordination.

ATS 01N244Q to ATS 01N285Q

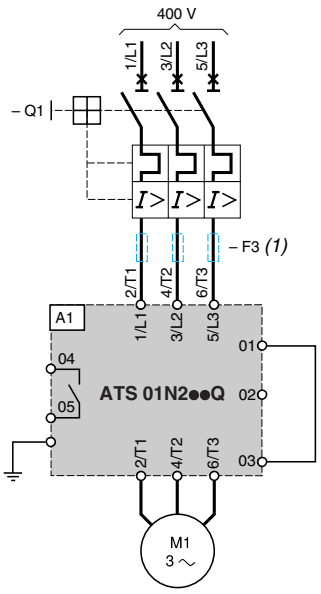

(1) For type 2 coordination.

Automatic control with reversal of operating direction, without deceleration (freewheel)

ATS 01N230LY to ATS 01N285LY

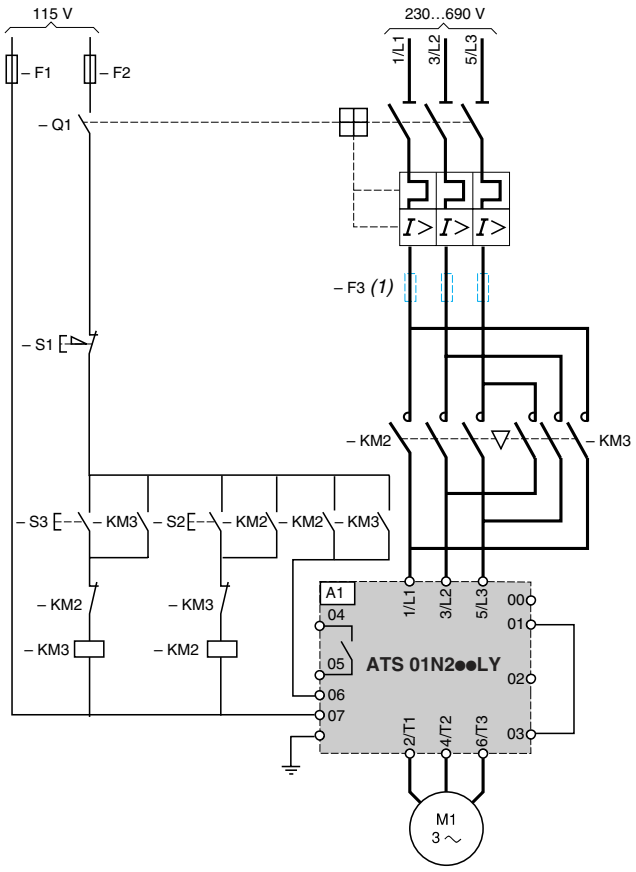

(1) For type 2 coordination.

ATS 01N244Q to ATS 01N285Q

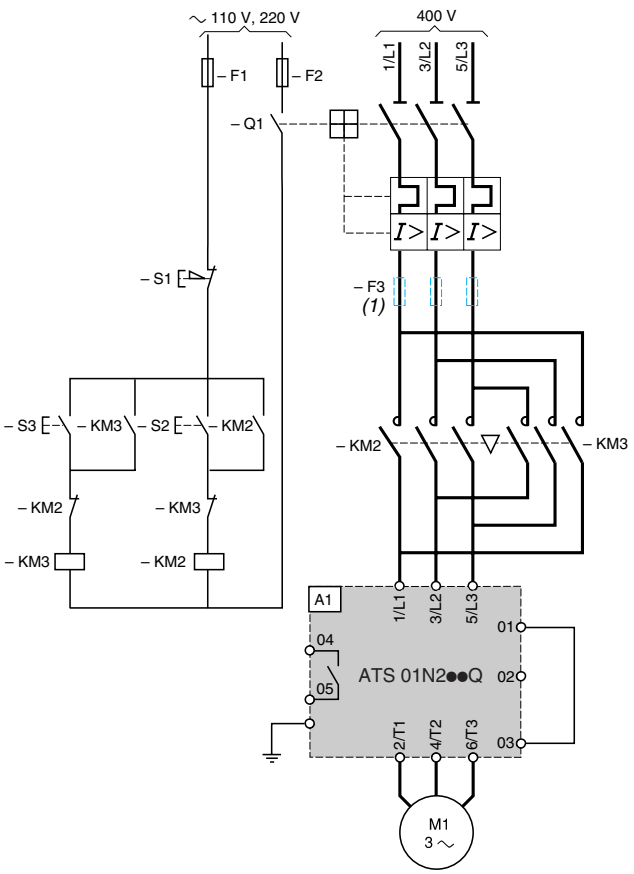

(1) For type 2 coordination.

Soft starters for asynchronous motors
Altistart 01
For 15 to 75 kW motors

ATS 01N2●●LY and ATS 01N2●●Q soft start/soft stop units

Automatic control with or without deceleration (freewheel), without contactor

ATS 01N230LY to ATS 01N285LY

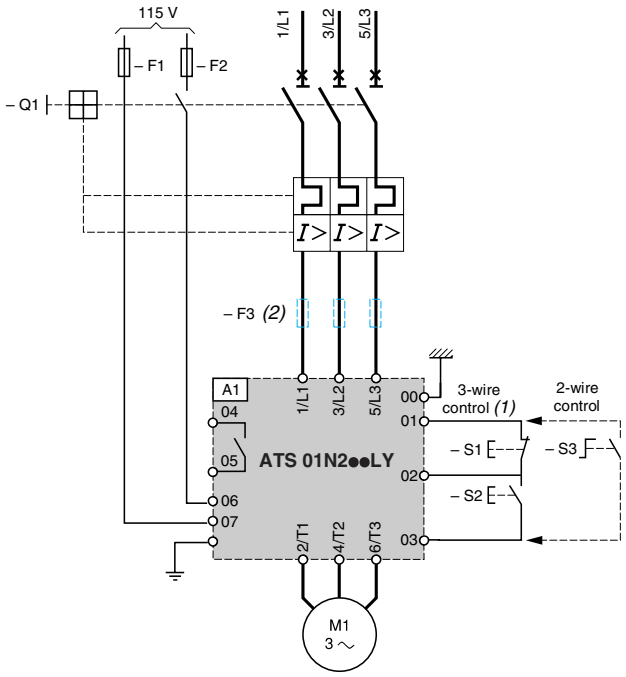

(1) Use shielded wires above 1 m.
(2) For type 2 coordination.

ATS 01N244Q to ATS 01N285Q

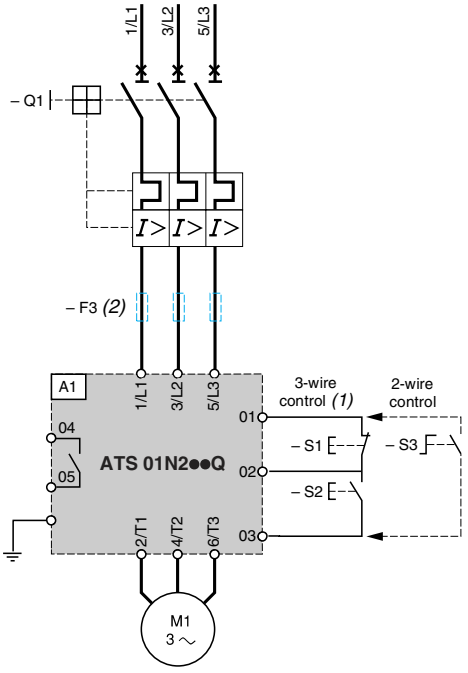

(1) Use shielded wires above 1 m.
(2) For type 2 coordination.

Compatible components (for full references, see pages 1/18 and 1/19 or refer to our catalogue: “Motor starter solutions - Control and protection components”.)

Code	Description
A1	Soft start/soft stop unit
Q1	GV3 or GV7 circuit-breaker
KM2, KM3	LC1 ●●● + LA4 DA2U
F1, F2	Control protection fuses
F3	3 fast-acting fuses
S1, S2, S3	XB4 B or XB5 B pushbuttons

Soft starters for asynchronous motors
Altistart 01
For 15 to 75 kW motors

ATS 01N2●●LY and ATS 01N2●●Q soft start/soft stop units *(continued)*

Automatic control with or without deceleration (freewheel), with contactor

ATS 01N230LY to ATS 01N285LY

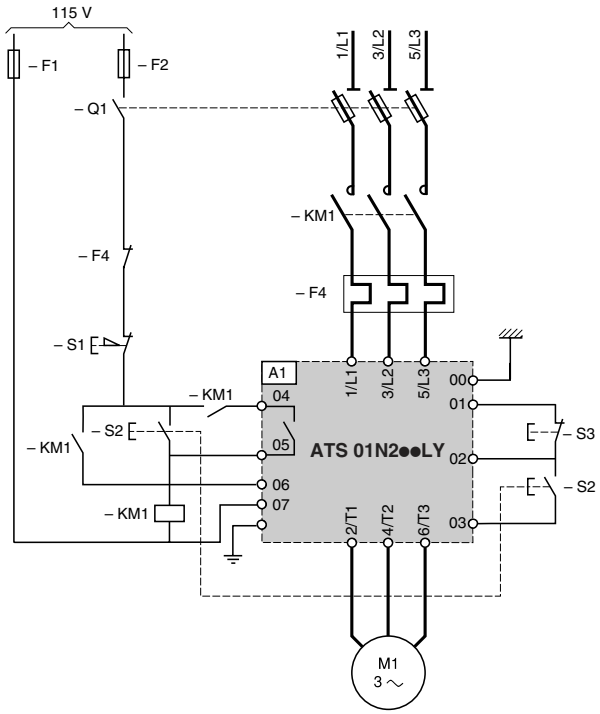

ATS 01N244Q to ATS 01N285Q

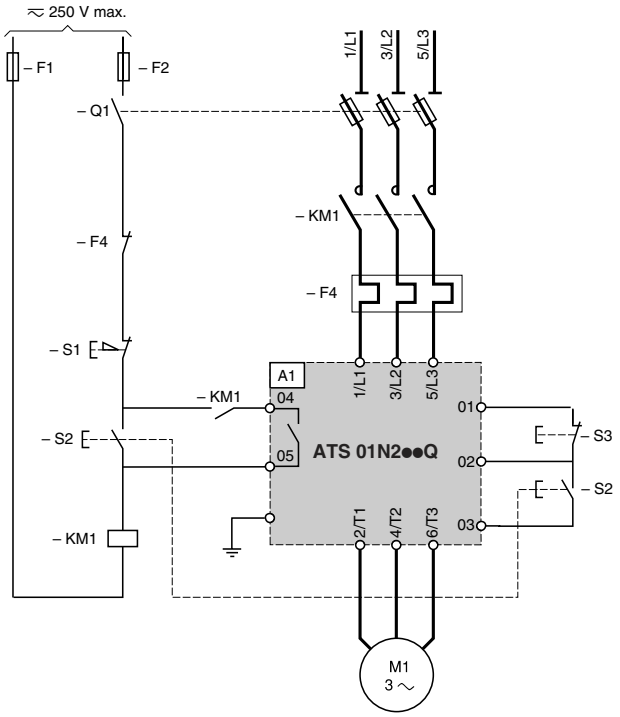

Compatible components (for full references, see pages 1/18 and 1/19 or refer to our catalogue: “Motor starter solutions - Control and protection components”.)

Code	Description
A1	Soft start/soft stop unit
Q1	GK1 disconnector
KM1	LC1 ●●● + LA4 DA2U
F1, F2	Control protection fuses
F4	LRD thermal overload relay
S1, S2, S3	XB4 B or XB5 B pushbuttons

Soft starters for asynchronous motors
Altistart 01
For 15 to 75 kW motors

ATS 01N2●●LY and ATS 01N2●●Q soft start/soft stop units (continued)

Automatic control without deceleration (freewheel), with a maintaining function

ATS 01N230LY to ATS 01N285LY

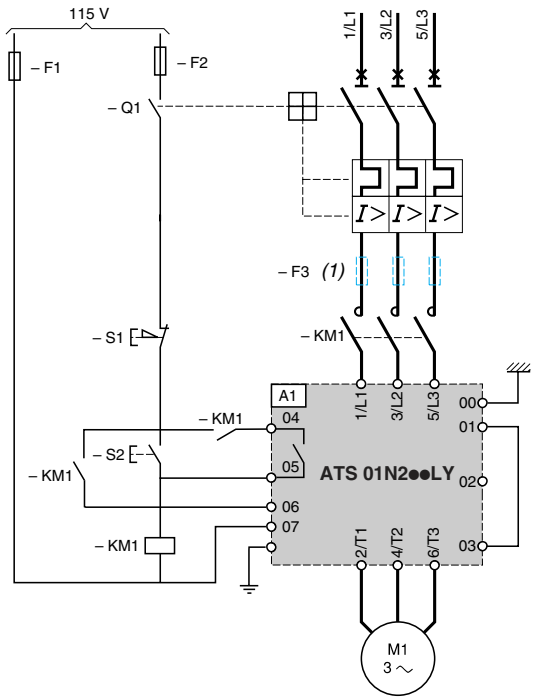

ATS 01N244Q to ATS 01N285Q

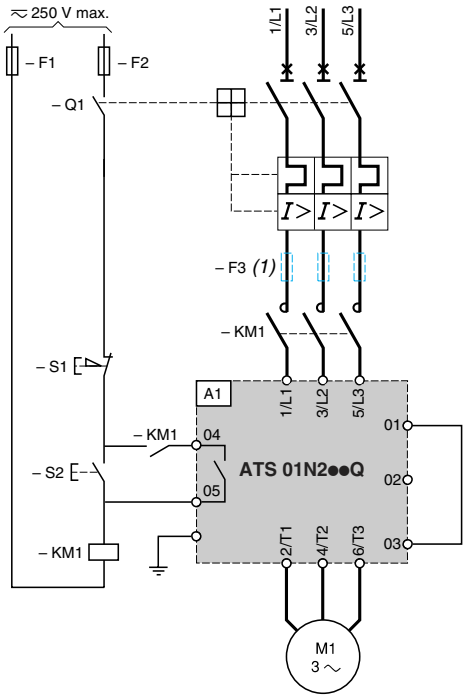

(1) For type 2 coordination.

Compatible components (for full references, see pages 1/18 and 1/19 or refer to our catalogue: "Motor starter solutions - Control and protection components".)

Code	Description
A1	Soft starter
Q1	GV3 circuit-breaker
KM1	LC1 ●●● + LA4 DA2U
F1, F2	Control protection fuses
F3	3 fast-acting fuses
S1, S2	XB4 B or XB5 B pushbuttons

Soft starters for asynchronous motors

Altistart 01

400 V power supply, type 1 coordination

1

1.1

Components to be combined in accordance with standards IEC 60947-1 and IEC 60947-4-2

Combine either circuit-breaker (light blue columns), contactor, starter, or switch/fuse (dark blue columns), contactor, starter

Motor		Starter	Type of circuit-breaker		Type of contactor	Type of switch or switch disconnector (base unit)	Am fuses		I²t	Thermal overload relay
		Class 10	Telemecanique	Rating			Reference	Rating		
kW	A			A				A	A² s	
M1		A1	Q1		KM1, KM2, KM3	Q2				F4
0.37	0.98	ATS 01N103FT	GV2 ME05	1	LC1 K06 or LC1 D09	LS1 D2531	DF2 CA02	2	265	LR2 K0306 LRD 05
0.55	1.5	ATS 01N103FT	GV2 ME06	1.6	LC1 K06 or LC1 D09	LS1 D2531	DF2 CA02	2	265	LR2 K0307 LRD 06
0.75	2	ATS 01N103FT	GV2 ME07	2.5	LC1 K06 or LC1 D09	LS1 D2531	DF2 CA02	2	265	LR2 K0308 LRD 07
1.1	2.5	ATS 01N103FT	GV2 ME08	4	LC1 K06 or LC1 D09	LS1 D2531	DF2 CA04	4	265	LR2 K0308 LRD 08
		ATS 01N206QN	GV2 ME08	4	LC1 K06 or LC1 D09	LS1 D2531	DF2 CA04	4	265	LR2 K0308 LRD 08
1.5	3.5	ATS 01N106FT	GV2 ME08	4	LC1 K06 or LC1 D09	LS1 D2531	DF2 CA06	6	265	LR2 K0310 LRD 08
		ATS 01N206QN	GV2 ME08	4	LC1 K06 or LC1 D09	LS1 D2531	DF2 CA06	6	265	LR2 K0310 LRD 08
2.2	5	ATS 01N106FT	GV2 ME10	6.3	LC1 K06 or LC1 D09	LS1 D2531	DF2 CA08	8	265	LR2 K0312 LRD 10
		ATS 01N206QN	GV2 ME10	6.3	LC1 K09 or LC1 D09	LS1 D2531	DF2 CA08	8	265	LR2 K0312 LRD 10
3	6.5	ATS 01N106FT	GV2 ME14	9	LC1 K09 or LC1 D09	LS1 D2531	DF2 CA12	12	265	LR2 K0314 LRD 12
		ATS 01N206QN	GV2 ME14	9	LC1 K09 or LC1 D09	LS1 D2531	DF2 CA12	12	265	LR2 K0314 LRD 12
4	8.4	ATS 01N109FT	GV2 ME14	9	LC1 K09 or LC1 D09	LS1 D2531	DF2 CA12	12	610	LR2 K0316 LRD 14
		ATS 01N209QN	GV2 ME14	9	LC1 K09 or LC1 D09	LS1 D2531	DF2 CA12	12	610	LR2 K0316 LRD 14
5.5	11	ATS 01N112FT	GV2 ME16	13	LC1 K12 or LC1 D12	LS1 D2531	DF2 CA16	16	610	LR2 K0321 LRD 16
		ATS 01N212QN	GV2 ME16	13	LC1 K12 or LC1 D12	LS1 D2531	DF2 CA16	16	610	LR2 K0321 LRD 16
7.5	14.8	ATS 01N125FT	GV2 ME20	17	LC1 D18	LS1 D2531	DF2 CA20	20	6050	LRD 21
		ATS 01N222QN	GV2 ME20	17	LC1 D18	LS1 D2531	DF2 CA20	20	6050	LRD 21
9	18.1	ATS 01N125FT	GV2 ME21	21	LC1 D25	LS1 D2531	DF2 CA25	25	6050	LRD 21
		ATS 01N222QN	GV2 ME21	21	LC1 D25	LS1 D2531	DF2 CA25	25	6050	LRD 21
11	21	ATS 01N125FT	GV2 ME22	23	LC1 D25	LS1 D2531	DF2 CA25	25	6050	LRD 22
		ATS 01N222QN	GV2 ME22	23	LC1 D25	LS1 D2531	DF2 CA25	25	6050	LRD 22
15	28.5	ATS 01N232QN	GV2 ME32	32	LC1 D32	GK1 EM	DF2 EA40	40	7200	LRD 3353
18.5	35	ATS 01N244Q	GV3 ME40	40	LC1 D38	GK1 EM	DF2 EA40	40	8000	LRD 3355
22	42	ATS 01N244Q	GV3 ME63	63	LC1 D50	GK1 FM	DF2 FA63	63	8000	LRD 3357
30	57	ATS 01N272Q	GV3 ME63	63	LC1 D65	GK1 FM	DF2 FA63	63	9000	LRD 3359
37	69	ATS 01N272Q	GV3 ME80	80	LC1 D80	GK1 FM	DF2 FA80	80	9000	LRD 3363
45	81	ATS 01N285Q	GV7 RE100	100	LC1 D95	GK1 FM	DF2 FA100	100	9000	LRD 3365

Presentation: pages 1/4 and 1/5 | Characteristics: pages 1/6 and 1/7 | References: page 1/8 | Dimensions: page 1/9 | Schemes: pages 1/10 to 1/17

Soft starters for asynchronous motors

Altistart 01

690 V power supply, type 1 coordination

Components to be combined in accordance with standards IEC 60947-1 and IEC 60947-4-2

Combine either circuit-breaker (light blue columns), contactor, starter, or switch/fuse (dark blue columns), contactor, starter

Motor		Starter	Type of circuit-breaker		Type of contactor	Type of switch or switch disconnector (base unit)	Am fuses		I^2t	Thermal overload relay
		Class 10	Telemecanique	Rating			Reference	Rating		
kW	A			A				A	A^2 s	
M1		A1	Q1		KM1	Q2				F4
30	33	**ATS 01N230LY**	**GV3 ME40 + GV3 A01**	25…40	**LC1 D50**	**GK1 EM**	**DF2 EA40**	40	7200	**LRD 3355**
37	40	**ATS 01N244LY**	**GV3 ME63 + GV3 A01**	40…63	**LC1 D65**	**GK1 FM**	**DF2 FA63**	63	8000	**LRD 3359**
55	58	**ATS 01N272LY**	**GV3 ME80 + GV3 A01**	56…80	**LC1 D115**	**GK1 FM**	**DF2 FA80**	80	9000	**LRD 3363**
75	75.7	**ATS 01N285LY**	**GV7 RE100 + GV7 AE11**	60…100	**LC1 D150**	**GK1 FM**	**DF2 FA100**	100	9000	**LRD 3365**

Soft starters for asynchronous motors
Altistart U01 and TeSys U

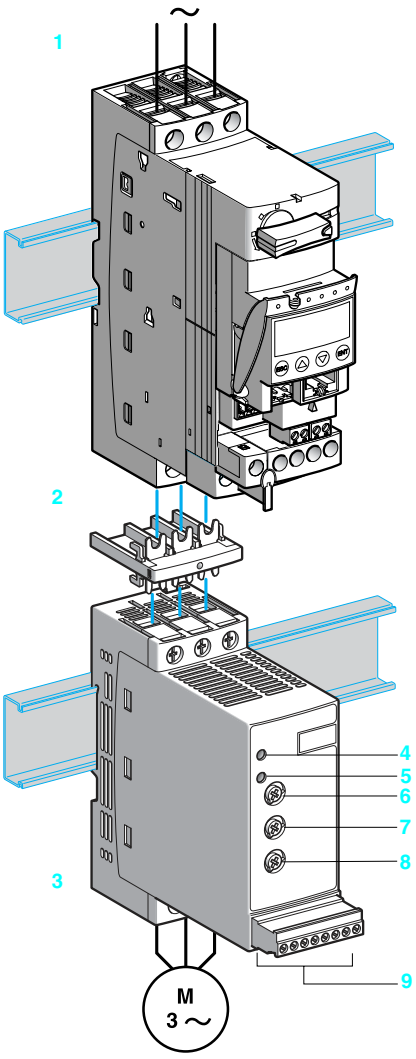

Presentation

The Altistart U01 is a soft start/soft stop unit for asynchronous motors. It is designed primarily for combinations with **TeSys U** controller-starters.

When combined with a **TeSys U** 1 controller by means of a connector 2, the Altistart U01 3 is a power option which provides the “Soft start/soft stop” function. The result is a unique, innovative motor starter.

Using the Altistart U01 starter enhances the starting performance of asynchronous motors by allowing them to start gradually, smoothly and in a controlled manner. It prevents mechanical shocks, which lead to wear and tear, and limits the amount of maintenance work and production downtime.
The Altistart U01 limits the starting torque and current peaks on starting, on machines which do not require a high starting torque.

The Altistart U01 is designed for the following simple applications:
- Conveyors
- Conveyor belts
- Pumps
- Fans
- Compressors
- Automatic doors and gates
- Small cranes
- Belt-driven machines, etc.

The Altistart U01 is compact and easy to install. It complies with standards IEC/EN 60947-4-2, carries UL, CSA, C-Tick, CCC and GOST certifications and CE marking.

■ **ATSU 01N2●●LT soft start/soft stop units**
□ Control two phases of the motor power supply to limit the starting current and for deceleration
□ Internal bypass relay
□ Motor power ratings ranging from 0.75 kW to 15 kW
□ Motor supply voltages ranging from 200 V to 480 V, 50/60 Hz.
An external power supply is required for controlling the starter.

Description

■ Altistart U01 soft start/soft stop units are equipped with:
□ A potentiometer for setting the starting time 6
□ A potentiometer for setting the deceleration time 8
□ A potentiometer for adjusting the start voltage threshold according to the motor load 7
□ 1 green LED 4 to indicate that the unit is switched on
□ 1 yellow LED 5 **to indicate that the motor is powered at nominal voltage, if it is connected to the starter**
□ A connector 9:
- 2 logic inputs for Run/Stop commands
- 1 logic input for the BOOST function
- 1 logic output to indicate the end of starting
- 1 relay output to indicate the starter has a power supply fault or the motor has reached a standstill at the end of the deceleration stage

Characteristics: pages 1/22 and 1/23
References: page 1/24
Dimensions: page 1/25
Schemes: pages 1/26 to 1/29

Description of a TeSys U controller-starter

Please consult the “TeSys U starters - open version” catalogue.

ATSU 01N2●●●LT soft start unit functions

■ 2-wire control
The run and stop commands are controlled by a single logic input. State 1 of logic input LI2 controls starting and state 0 controls stopping.

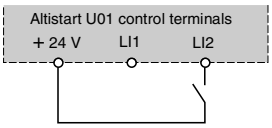

Wiring diagram for 2-wire control

■ 3-wire control
The run and stop commands are controlled by 2 different logic inputs.
Stopping is achieved when logic input LI1 opens (state 0).
The pulse on input LI2 is stored until input LI1 opens.

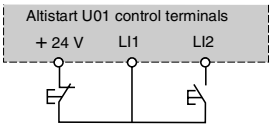

Wiring diagram for 3-wire control

■ Starting time
Controlling the starting time means that the time of the voltage ramp applied to the motor can be adjusted to obtain a gradual starting time, dependent on the motor load.

■ Voltage boost function via logic input
Activating the BOOST logic input enables the function for supplying a starting overtorque capable of overcoming any mechanical friction.
When the input is at state 1, the function is active (input connected to the + 24 V) and the starter applies a fixed voltage to the motor for a limited time before starting.

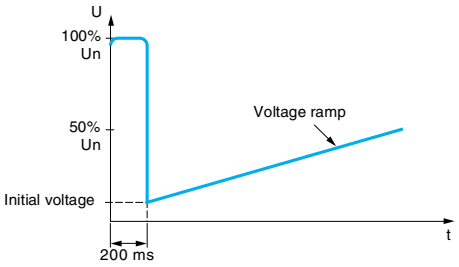

Application of a voltage boost equal to 100% of the nominal motor voltage

■ End of starting
□ Application function for logic output LO1
ATSU 01N2●●LT soft start/soft stop units are equipped with an open collector logic output LO, which indicates the end of starting when the motor has reached nominal speed.

Soft starters for asynchronous motors
Altistart U01 and TeSys U

Environmental characteristics

Type of starter			ATSU 01N2●●LT
Conformity to standards			Altistart U01 electronic starters have been developed to conform to the strictest international standards and the recommendations relating to electrical industrial control devices (IEC, EN), in particular standard IEC/EN 60947-4-2.
Electromagnetic compatibility EMC			
	Conducted and radiated emissions		CISPR 11 level B, IEC 60947-4-2, level B
	Harmonics		IEC 1000-3-2, IEC 1000-3-4
	EMC immunity		EN 50082-2, EN 50082-1
	Electrostatic discharge		IEC 61000-4-2 level 3
	Immunity to radiated radio-electrical interference		IEC 61000-4-3 level 3
	Immunity to electrical transients		IEC 61000-4-4 level 4
	Voltage/current impulse		IEC 61000-4-5 level 3
	Conducted and radiated emissions		IEC 61000-4-6 level 3
	Immunity to conducted interference caused by radio-electrical fields		IEC 61000-4-11
	Damped oscillating waves		IEC 61000-4-12 level 3
CE marking			The starters carry CE marking in accordance with the European low voltage directives IEC/EN 60947-4-2.
Product certifications			UL, CSA, C-Tick, CCC and GOST
Degree of protection			IP 20
Degree of pollution			2 conforming to IEC/EN 60947-4-2
Vibration resistance			1.5 mm peak to peak from 3 to 13 Hz, 1 gn from 13 to 150 Hz, conforming to IEC/EN 60068-2-6
Shock resistance			15 gn for 11 ms conforming to IEC/EN 60068-2-27
Relative humidity			5…95% without condensation or dripping water conforming to IEC 60068-2-3
Ambient temperature around the unit	Storage	°C	- 25…+ 70 conforming to IEC/EN 60947-4-2
	Operation	°C	- 10…+ 40 without derating, up to 50°C with current derating of 2% per °C above 40°C
Maximum operating altitude		m	1000 without derating (above this, derate the current by 2.2% per additional 100 m)
Operating position Maximum permanent angle in relation to the normal vertical mounting position			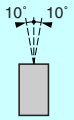

Electrical characteristics

Type of starter			ATSU 01N2●●LT
Category of use	Conforming to IEC 60947-4-2		Ac-53b
Rated operating voltage	3-phase ∿ voltage	V	200 - 15% to 480 + 10%
Frequency		Hz	50 - 5% to 60 + 5%
Output voltage			Maximum 3-phase voltage equal to line supply voltage
Control supply voltage			24 V ⎓, 100 mA ± 10%
Rated operating current		A	6...32
Adjustable starting time		s	1...10
Adjustable deceleration time		s	1...10
Starting torque		%	30.... 80% of DOL motor starting torque

Type of starter	ATSU		01N206LT	01N209LT	01N212LT	01N222LT	01N232LT
Control power supply consumption			24 V ⎓, 65 mA			24 V ⎓, 100 mA	
Power dissipated	At full load at end of starting	W	1.5	1.5	1.5	2.5	2.5
	In transient state at 5 times the rated operating current	W	61.5	91.5	121.5	222.5	322.5

Type of starter			ATSU 01N206LT to ATSU 01N222LT			ATSU 01N232LT		
Use								
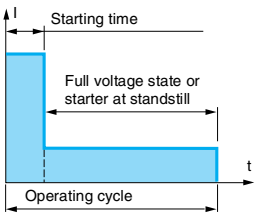	Starting time	s	1	5	10	1	5	10
	Maximum number of cycles per hour		100	20	10	50	10	5

Electrical characteristics (continued)

Logic input power supply (electrically isolated between power and control) **+ 24 V, COM**			24 V ± 10% Isolated Max. current 100 mA
Logic inputs **LI1, LI2, BOOST** Stop, run and boost on start-up functions			Logic inputs with impedance 27 kΩ; 24 V power supply (U max 40 V) Max. current 8 mA State 0 if U < 5 V and I < 0.2 mA State 1 if U > 13 V and I > 0.5 mA
Logic output LO1 End of starting signal			Open collector logic output: External 24 V power supply (minimum 6 V, maximum 30 V) Max. current 200 mA
Relay output **R1A R1C**			Normally open (N/O) contact Minimum switching capacity: 10 mA for 6 V ⎓ Maximum switching capacity on inductive load (cos φ = 0.5 and L/R = 20 ms): 2 A for 250 V ∿ or 30 V ⎓ (AC-15) Maximum operating voltage 440 V
LED signalling	Green LED		Starter powered up
	Yellow LED		Nominal voltage reached

Connections (maximum connection capacity and tightening torque)

Power circuit			Connection to Ø 4 mm screw clamps	
Flexible wire without cable end	1 conductor	**mm²**	1.5…10	8 AWG
	2 conductors	**mm²**	1.5…6	10 AWG
Flexible wire with cable end	1 conductor	**mm²**	1…6	10 AWG
	2 conductors	**mm²**	1…6	10 AWG
Rigid wire	1 conductor	**mm²**	1…10	8 AWG
	2 conductors	**mm²**	1…6	10 AWG
Tightening torque		**N.m**	1.9…2.5	
Control circuit			Screw connector	
Flexible wire without cable end	1 conductor	**mm²**	0.5…2.5	14 AWG
	2 conductors	**mm²**	0.5…1.5	16 AWG
Flexible wire with cable end	1 conductor	**mm²**	0.5…1.5	16 AWG
	2 conductors	**mm²**	0.5…1.5	16 AWG
Rigid wire	1 conductor	**mm²**	0.5…2.5	14 AWG
	2 conductors	**mm²**	0.5…1	17 AWG
Tightening torque		**N.m**	0.5	

Torque characteristics (typical curves)

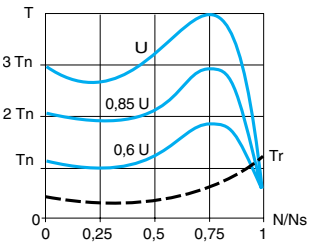

The diagram opposite shows the torque/speed characteristic of a cage motor in relation to the supply voltage.
The torque varies in line with the square of the voltage at a fixed frequency. The gradual increase in the voltage prevents the instantaneous current peak on power-up.

Soft starters for asynchronous motors
Altistart U01 and TeSys U

DF531714



ATSU 01N222LT

DF510382

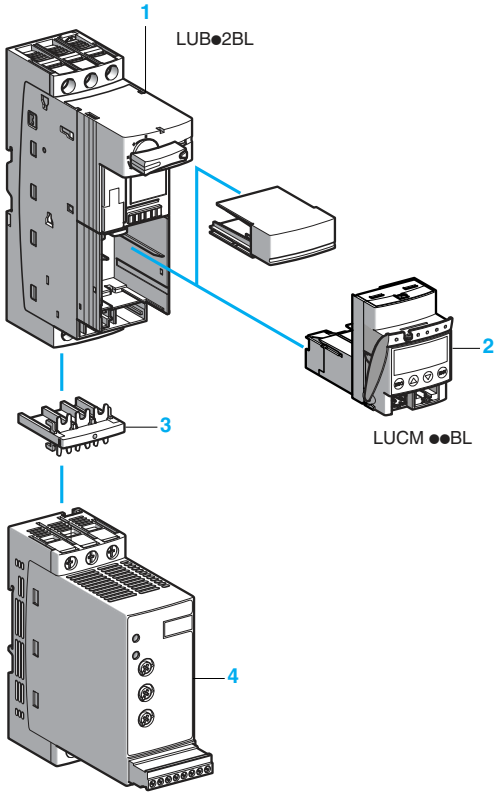

Soft start/soft stop units for 0.75 to 15 kW motors
(can be combined with the TeSys U starter)

Motor power (1)				Starter		
230 V	230 V	400 V	460 V	Nominal current	Reference	Weight
kW	*HP*	kW	*HP*	A		kg
3-phase supply voltage: 200…480 V 50/60 Hz						
0.75 1.1	*1* *1.5*	1.5 2.2 3	*2* *3*	6	**ATSU 01N206LT**	0.340
1.5 –	*2* –	– 4	*5* –	9	**ATSU 01N209LT**	0.340
2.2 3	*3* –	5.5 –	*7.5* –	12	**ATSU 01N212LT**	0.340
4 5.5	*5* *7.5*	7.5 11	*10* *15*	22	**ATSU 01N222LT**	0.490
7.5	*10*	15	*20*	32	**ATSU 01N232LT**	0.490

Accessorie

Description	Used for starter	Reference	Weight kg
Power connector between ATSU 01N2●●LT and TeSys U	ATSU 01N2●●LT	**VW3 G4104**	0.020

TeSys U starter and soft start unit combinations

Numerous possibilities for combinations and options are offered.
Please consult the “TeSys U Starters-open version” specialist catalogue.

Motor power Voltage			Soft starter	TeSys U	
				Power base	Control unit (2)
230 V kW/*HP*	400 V kW	460 V *HP*			
0.75/*1*	1.5	*2*	ATSU 01N206LT	LUB 12	LUC● 05BL
1.1/*1.5*	2.2/3	*3*	ATSU 01N206LT	LUB 12	LUC● 12BL
1.5/*2*	–	–	ATSU 01N209LT	LUB 12	LUC● 12BL
–	4	*5*	ATSU 01N209LT	LUB 12	LUC● 12BL
2.2/*3*	–	–	ATSU 01N212LT	LUB 12	LUC● 12BL
3/–	5.5	*7.5*	ATSU 01N212LT	LUB 32	LUC● 18BL
4/*5*	7.5	*10*	ATSU 01N222LT	LUB 32	LUC● 18BL
5.5/*7.5*	11	*15*	ATSU 01N222LT	LUB 32	LUC● 32BL
7.5/*10*	15	*20*	ATSU 01N232LT	LUB 32	LUC● 32BL

Example of a starter-motor combination with:
1 non-reversing power base for DOL starting (LUB●2BL)
2 control unit (LUCM ●●BL)
3 power connector (VW3 G4104)
4 Altistart U01soft start/soft stop unit (ATSU 01N2●●LT)

(1) Standard motor power ratings, HP power ratings indicated according to standard UL 508.
(2) Depending on the configuration of the chosen TeSys U starter, replace the ● with A for standard, B for expandable, and M for multifunction.

Soft starters for asynchronous motors
Altistart U01 and TeSys U

TeSys U combination (non-reversing power base) and ATSU 01N206LT to ATSU 01N212LT
Mounting on ⊓ (35 mm) rail with VW3 G4104 connector

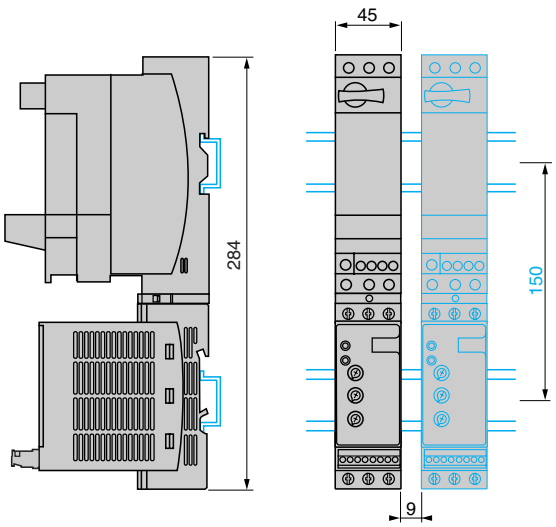

TeSys U combination (non-reversing or reversing power base) and ATSU 01N206LT to ATSU 01N212LT
Side by side mounting

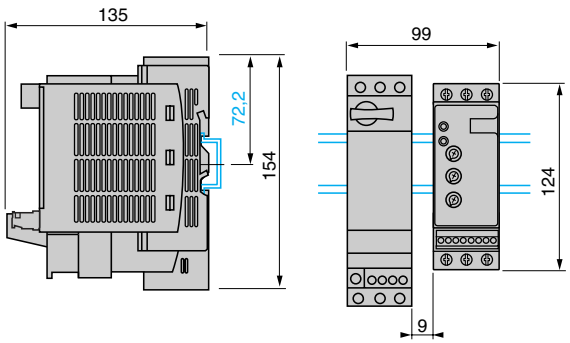

TeSys U combination (non-reversing power base) and ATSU 01N222LT to ATSU 01N232LT
Mounting on ⊓ (35 mm) rail with VW3 G4104 connector

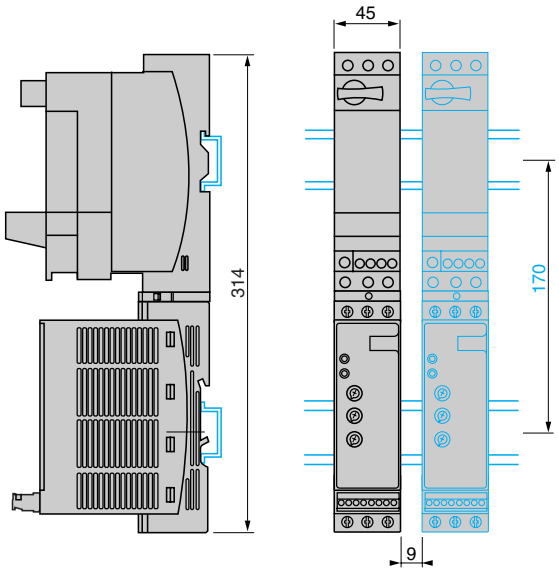

TeSys U combination (non-reversing or reversing power base) and ATSU 01N222LT to ATSU 01N232LT
Side by side mounting

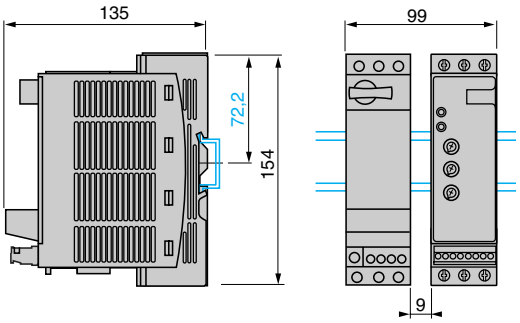

VW3 G4104 connector

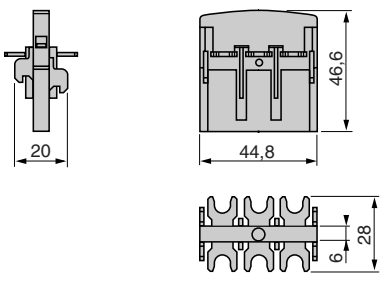

Soft starters for asynchronous motors

Altistart U01 and TeSys U

For 0.75 to 15 kW motors

ATSU 01N2●●LT soft start/soft stop units

Power wiring

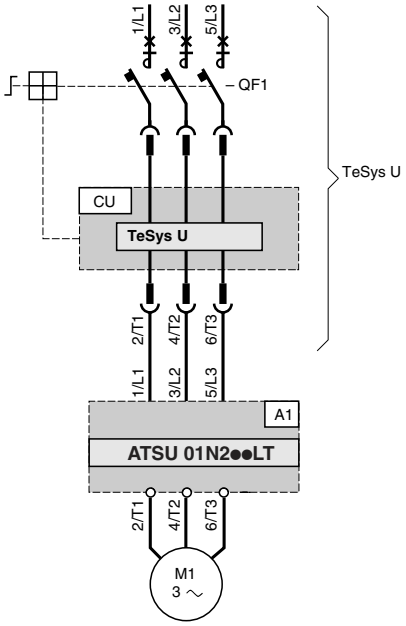

Power wiring with reversing unit

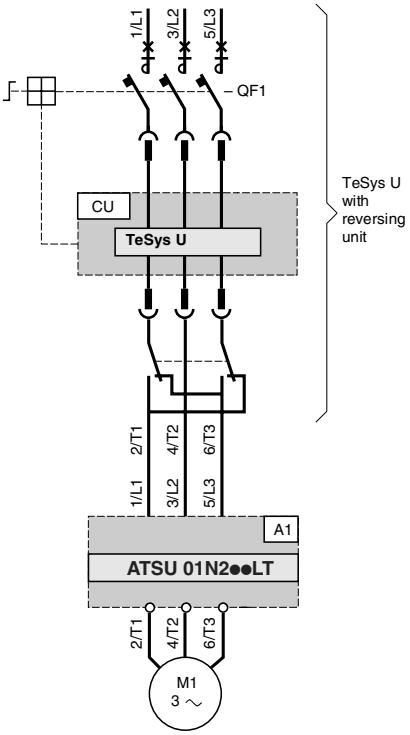

Compatible components (For full references, see pages 1/18 and 1/19 or refer to our catalogue: “Motor starter solutions - Control and protection components”)

Code	Description
A1	Soft start/soft stop unit
QF1	TeSys U controller-starter
CU	TeSys U control unit

ATSU 01N2●●LT soft start/soft stop units *(continued)*

Automatic 2-wire control

Without deceleration

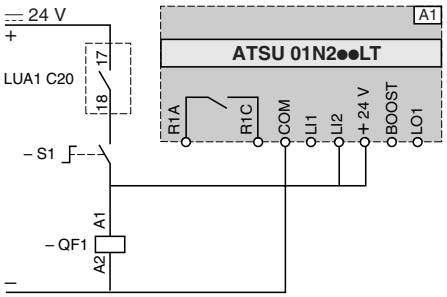

With and without deceleration

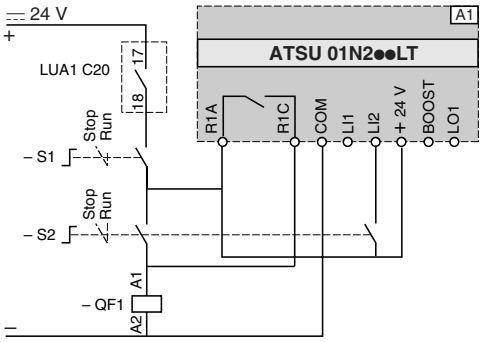

Functional diagrams

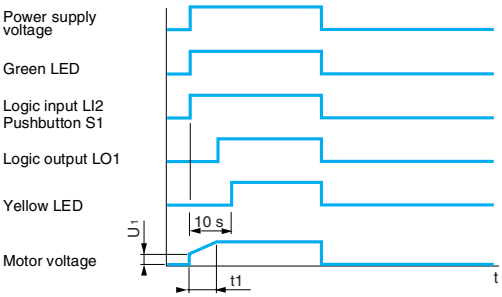

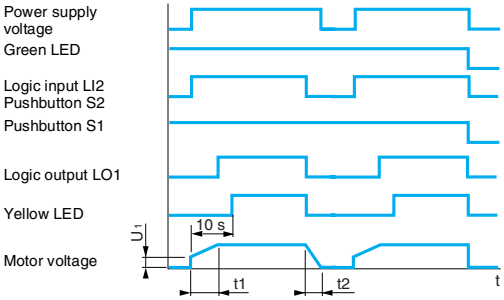

Automatic 3-wire control

Without deceleration

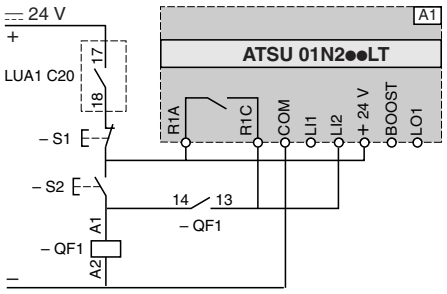

With deceleration

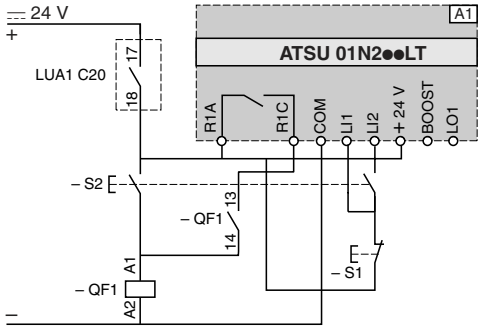

Functional diagrams

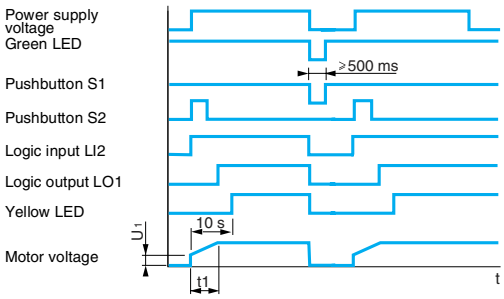

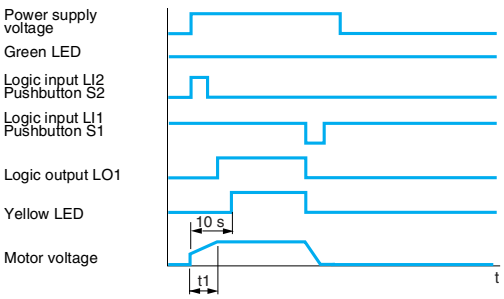

A1: Soft start/soft stop unit
S1, S2: XB4 B or XB5 B pushbuttons
QF1: TeSys U controller-starter
t1: Acceleration time can be controlled by a potentiometer
t2: Deceleration time can be controlled by a potentiometer
U_1: Starting time can be controlled by a potentiometer

Presentation: pages 1/20 and 1/21
Characteristics: pages 1/22 and 1/23
References: page 1/24
Dimensions: page 1/25

Soft starters for asynchronous motors
Altistart U01 and TeSys U
For 0.75 to 15 kW motors

ATSU 01N2●●LT soft start/soft stop units *(continued)*

Automatic 3-wire control, with reversing unit

Without deceleration

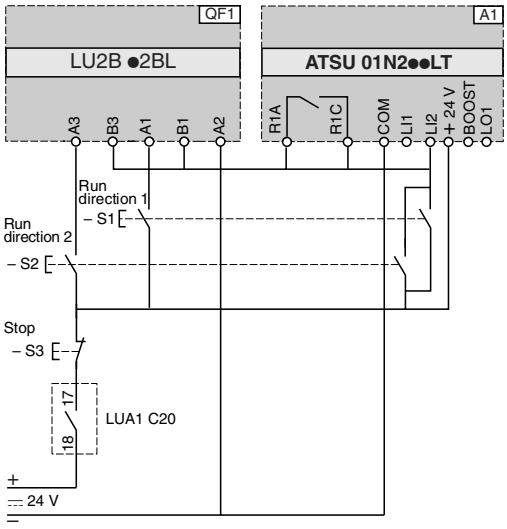

QF1: TeSys U controller-starter with reversing unit
A1: Soft start/soft stop unit
S1, S2, S3: XB4 B or XB5 B pushbuttons
S3: minimum depression time 500 ms

With deceleration

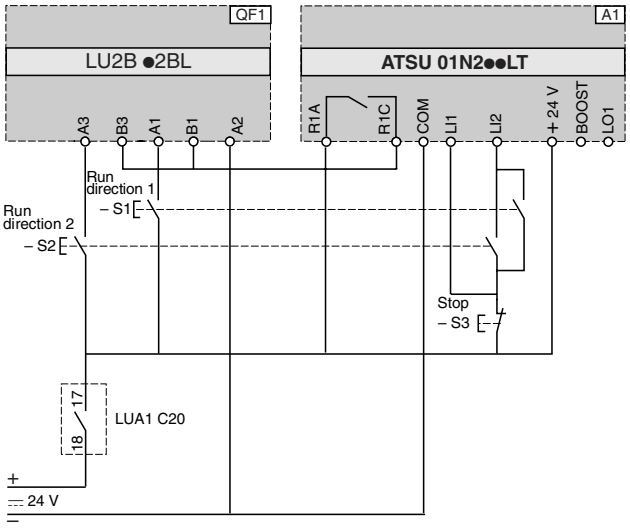

QF1: TeSys U controller-starter with reversing unit
A1: Soft start/soft stop unit
S1, S2, S3: XB4 B or XB5 B pushbuttons

Boost on starting and end of starting signal

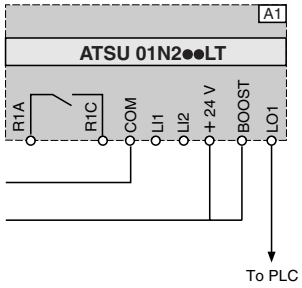

A1: Soft start/soft stop unit

Soft starters for asynchronous motors
Altistart U01 and TeSys U
For 0.75 to 15 kW motors

ATSU 01N2●●LT soft start/soft stop units *(continued)*

Automatic control with Modbus communication module, with and without deceleration

Without reversing unit

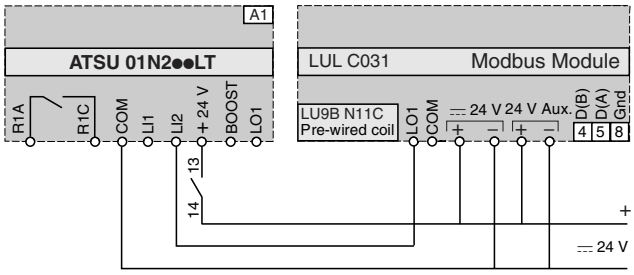

With reversing unit

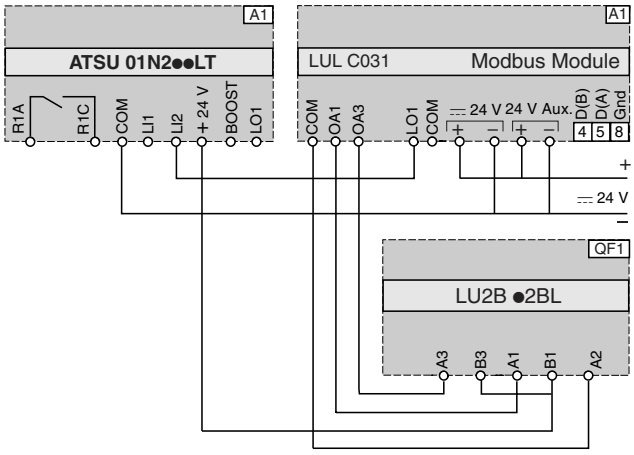

Function	Register	Bit	Value
Powering down TeSys U and ATSU			
–	704	0	0
Automatic control without deceleration			
Run	700	0	1
Stop	704	0	0
Automatic control with deceleration			
Run	700	0	1
Soft stop	700	0	0

A1: Soft start/soft stop unit

Function	Register	Bit	Value
Powering up TeSys U and ATSU			
Forward	704	0	1
Reverse	704	1	1
Powering down TeSys U and ATSU			
Forward	704	0	0
Reverse	704	1	0
Automatic control without deceleration			
Run	700	0	1
Stop forward	704	0	0
Stop reverse	704	1	0
Automatic control with deceleration (forward or reverse)			
Run	700	0	1
Soft stop	700	0	0

A1: Soft start/soft stop unit
QF1: TeSys U controller-starter with reversing unit

Automatic control with AS-Interface communication module, without deceleration

Without reversing unit

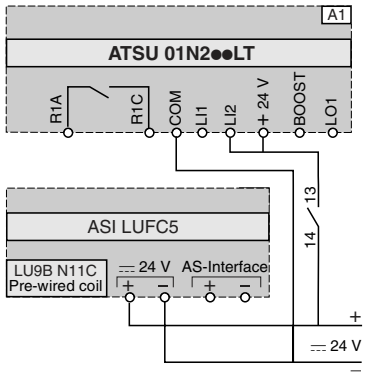

With reversing unit

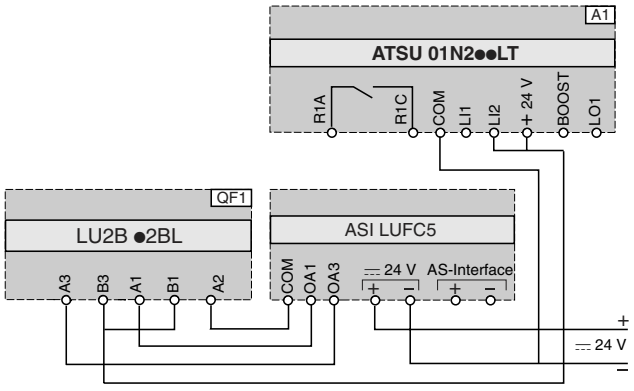

Function	Bit	Value
Power-up and automatic control without deceleration		
Run	D0	1
Stop	D0	0

A1: Soft start/soft stop unit

Function	Bit	Value
Power-up and automatic control without deceleration		
Run forward	D0	1
Stop	D0	0
Run reverse	D1	1
Stop	D1	0

A1: Soft start/soft stop unit
QF1: TeSys U controller-starter with reversing unit