Special Features and Catalog Number Explanation

Interpretation of the Catalog Number

XCM | **D** | **21** | **02 ▲** | **L1**

XCM—Assembled unit
ZCM—Body, contacts and base

Body (or base)
D—Metal Modular
N—Plastic (not modular)
C—Plug-in Base (with ZCM only)

Contact Description
21—1 N.O. + 1 N.C. Snap Action Silver
25—1 N.O. + 1 N.C. Slow Make/Break Silver
29—1 N.C. + 1 N.C. Snap Action Silver
37—1 N.O. + 2 N.C. Slow Make/Break Silver
39—1 N.O. + 2 N.C. Snap Action Silver
41—2 N.O. + 2 N.C. Snap Action Silver
61—1 N.O. + 1 N.C. Snap Action Gold
65—1 N.O. + 1 N.C. Slow Make/Break Gold
69—1 N.C. + 1 N.C. Snap Action Gold
77—1 N.O. + 2 N.C. Slow Make/Break Gold
79—1 N.O. + 2 N.C. Snap Action Gold
81—2 N.O. + 2 N.C. Snap Action Gold

Cable Length
L1—1 m (3.3 ft)
L2—2 m (6.6 ft)
L3—3 m (9.8 ft)
L5—5 m (16.4 ft)
L7—7 m (23.0 ft)
L10—10 m (32.8 ft)

Head Assembly ●
01—Rotary Head without Lever Arm
02—Steel Roller Plunger
05—Rotary Head without lever arm / Programmable ♦
06—Cat Whisker
07—Spring Rod with Plastic End ■
08—Spring Rod ■
09—Maint. Rotary without Arm ■
10—Top Push Rod Plunger
11—Booted Top Push Rod Pl.
13—Top Ball Bearing Plunger ■
14—Adjustable Top Plunger ■
21—One-way Horiz. Plastic Roller
24—Retractable Steel Roller, 9 mm (0.35 in.)
27—One-way Vert. Plastic Roller
28—One-way Horiz. or Vert. Roller
29—Booted Top Roller Plunger ■
62—Adjust. Side Push Rod Pl. ■
63—Side Push Rod Plunger ■
64—Horiz. Side Roller Plunger ■
65—Vertical Side Roller Plunger ■
66—Side Ball Bearing Plunger ■
67—Horizontal Cat Whisker ■
F0—M12 Threaded Plunger Head ■
F2—M12 Threaded Roller Pl. Hd. ■
G1—M16 Threaded Booted Pl. Hd. ■
H0—M18 Threaded Plunger Head ■
H2—M18 Threaded Roller Pl. Hd. ■

Important Note:
Use this chart for interpretation only. Some possibilities are not shown and some combinations of components are not available. Some switches are not modular. Refer to the additional information in this catalog.
For interpretation of catalog numbers for heads and levers, see page 40.

■ Consult your local field sales office for availability.
▲ Last two digits of lever catalog number occupy this position when rotary heads with levers are required.
● See page 40 for levers.
♦ See page 45 for available levers, specifically allowed for the ZCE05 programmable head.

© 1997–2007 Schneider Electric All Rights Reserved

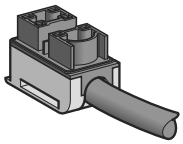

ZCMC2●L●

Components

Plug-in base with PVR cable ♦				
Contact type	**Diagram**	**Length of PVR cable m (ft)**	**Catalog number ■**	**Weight lb (kg)**
2-pole				
2-pole N.C. + N.O. snap action		1 (3.3)	**ZCMC21L1**	0.22 (0.100)
2-pole N.C. + N.O. snap action		2 (6.6)	**ZCMC21L2**	0.42 (0.190)
2-pole N.C. + N.O. snap action		3 (9.8)	**ZCMC21L3**	0.62 (0.280)
2-pole N.C. + N.O. snap action		5 (16.4)	**ZCMC21L5**	1.00 (0.440)
2-pole N.C. + N.O. snap action		7 (23.0)	**ZCMC21L7**	1.50 (0.700)
2-pole N.C. + N.O. snap action		10 (32.8)	**ZCMC21L10**	2.10 (0.970)
2-pole N.C. + N.O. slow break-before-make		1 (3.3)	**ZCMC25L1**	0.22 (0.100)
2-pole N.C. + N.O. slow break-before-make		2 (6.6)	**ZCMC25L2**	0.42 (0.190)
2-pole N.C. + N.O. slow break-before-make		3 (9.8)	**ZCMC25L3**	0.62 (0.280)
2-pole N.C. + N.O. slow break-before-make		5 (16.4)	**ZCMC25L5**	1.00 (0.440)
2-pole N.C. + N.O. slow break-before-make		7 (23.0)	**ZCMC25L7**	1.50 (0.700)
2-pole N.C. + N.O. slow break-before-make		10 (32.8)	**ZCMC25L10**	2.10 (0.970)

♦ The plug-in base recepticale must match the contact pin outs in the body. Only the length of cord is variable. See page 40 for 3-pole plug-in bases with cord. The 4-pole units and connector versions do not have component modular bases. See pages 34 and 35 for 4 contact bodies, and pages 38 and 39 for M12 connector bodies.

■ Available cable lengths:
ZCMC29L•: 1, 2, 3, 5, 7, and 10 m (3.3, 6.6, 9.8, 16.4, 23.0, and 32.8 ft)
ZCMC37L•: 1, 2, and 5 m (3.3, 6.6, and 16.4 ft)
ZCMC39L•: 1, 2, and 5 m (3.3, 6.6, and 16.4 ft)

© 1997–2007 Schneider Electric All Rights Reserved

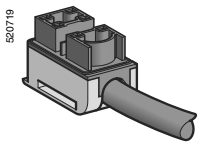

ZCMC21E•

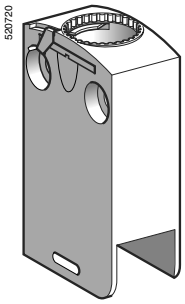

ZCMD6•
ZCMD7•

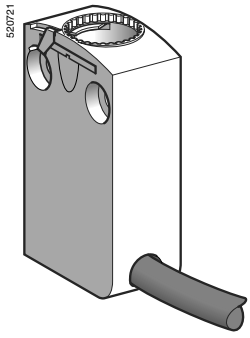

ZCMD81L•

Components

Pre-cabled connection components (CEI cable) *(1)*

Type of contact	Wiring diagram	Length of CEI cable, m (ft)	Catalog Number	Weight kg (lb)
2-pole				
N/C + N/O snap action		1 (3.28)	**ZCMC21E1**	0.100 (0.220)
		2 (6.56)	**ZCMC21E2**	0.190 (0.419)
		3 (9.84)	**ZCMC21E3**	0.280 (0.617)
		5 (16.40)	**ZCMC21E5**	0.440 (0.970)
		7 (22.97)	**ZCMC21E7**	0.700 (1.543)
		10 (32.81)	**ZCMC21E10**	0.970 (2.138)

Bodies with gold contacts

Type of contact	Positive operation *(2)*	Wiring diagram	Length of cable, m (ft)	Catalog Number	Weight kg (lb)
2-pole					
N/C + N/O snap action	⊖		—	**ZCMD61**	0.055 (0.121)
N/C + N/C snap action	⊖		—	**ZCMD69**	0.055 (0.121)
N/C + N/O break before make, slow break	⊖		—	**ZCMD65**	0.055 (0.121)
3-pole					
N/C + N/C + N/O snap action	⊖	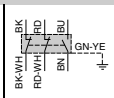	—	**ZCMD79**	0.055 (0.121)
N/C + N/C + N/O break before make, slow break	⊖	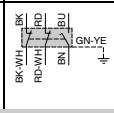	—	**ZCMD77**	0.055 (0.121)
4-pole					
N/C + N/C + N/O + N/O snap action	⊖	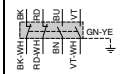	1 (3.28)	**ZCMD81L1**	0.160 (0.353)
			2 (6.56)	**ZCMD81L2**	0.255 (0.562)
			5 (16.40)	**ZCMD81L5**	0.525 (1.157)

1. Cable not UL, CSA certified.
2. ⊖ bodies with contacts assuring positive opening operation, when properly mounted and using a conforming operator.

© 1997–2007 Schneider Electric All Rights Reserved

562245

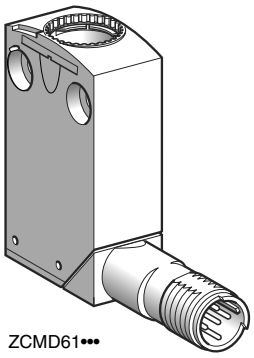

ZCMD61•••

561408

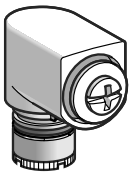

ZCE05

566637

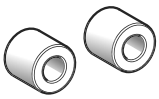

XCMZ06

566638



XCMZ07

562246

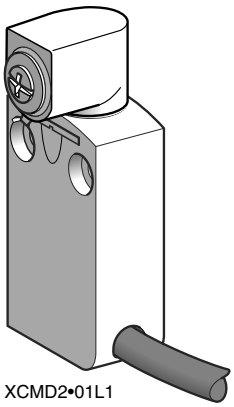

XCMD2•01L1

562247

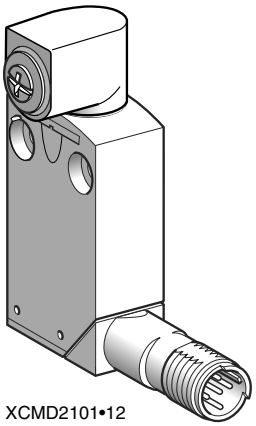

XCMD2101•12

Bodies with gold contacts, integral connector					
Type of contact	**Positive operation (1)**	**Wiring diagram**	**Connector**	**Catalog Number**	**Weight kg (lb)**
2-pole					
N/C + N/O snap action	—		M12 5-pin	**ZCMD61C12**	0.065 (0.143)
N/C + N/C snap action	—		M12 5-pin	**ZCMD69C12**	0.065 (0.143)
Single-pole					
C/O snap action	—	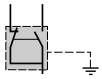	M12 4-pin	**ZCMD61M12**	0.065 (0.143)

Accessories				
Description	**Positive operation (1)**	**Suitable levers for use with head**	**Catalog Number**	**Weight kg (lb)**
Rotary head, without lever, spring return, for actuation from left AND right or from left OR right *(2)*	⊖	ZCY12, ZCY15, ZCY16, ZCY17, ZCY18, ZCY19, ZCY22, ZCY23, ZCY25, ZCY26, ZCY39, ZCY53, ZCY54, ZCY55, ZCY81	**ZCE05**	0.045 (0.099)
Spacer for mounting multi-track XCMD	—	—	**XCMZ06**	0.005 (0.011)
Spacer for angular positioning of heads with adjustable levers, for values other than -90°, 0° and 90°	—	—	**XCMZ07**	0.005 (0.011)

Bodies with contacts, with rotary head (without operating lever), pre-cabled					
Type of contact	**Positive operation (1)**	**Wiring diagram**	**Length of cable, m (ft)**	**Catalog Number**	**Weight kg (lb)**
2-pole					
N/C + N/O snap action	⊖	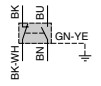	1 (3.28)	**XCMD2101L1**	0.180 (0.397)
N/C + N/O break before make, slow break	⊖	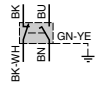	1 (3.28)	**XCMD2501L1**	0.180 (0.397)

Bodies with contacts, with rotary head (without operating lever), integral connector					
Type of contact	**Positive operation (1)**	**Wiring diagram**	**Connector**	**Catalog Number**	**Weight kg (lb)**
2-pole					
N/C + N/O snap action	⊖	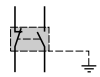	M12 5-pin	**XCMD2101C12**	0.110 (0.243)
Single-pole					
C/O snap action	—	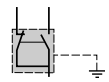	M12 4-pin	**XCMD2101M12**	0.110 (0.243)

1. ⊖ bodies with contacts or head assuring positive opening operation, when properly mounted and using a conforming operator.
2. For programming see page 14.

© 1997–2007 Schneider Electric All Rights Reserved

Catalog Numbers of suitable pre-wired female connectors

Type of connector		M12 straight, 4-pin 4 A, 250 V	M12 straight, 5-pin 4 A, 24 V	M12 elbowed, 5-pin 4 A, 24 V	7/8" 16 UN straight, 5-pin, 6 A, 250 V
With cable	L = 2 m (6.56 ft)	XZCP1169L2	XZCP1164L2	XZCP1264L2	XZCP1771L2
	L = 5 m (16.40 ft)	XZCP1169L5	XZCP1164L5	XZCP1264L5	XZCP1771L5
	L = 10 m (32.81 ft)	XZCP1169L10	XZCP1164L10	XZCP1264L10	XZCP1771L10
Weight, kg (lb)		0.105 (0.231)	0.115 (0.254)	0.115 (0.254)	0.190 (0.419)

Connections

XCMD with connector

4-pin, M12

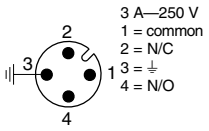

3 A—250 V
1 = common
2 = N/C
3 = ⏚
4 = N/O

5-pin, M12

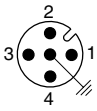

4 A—60 V

XCMD21•• or **ZCMD21••**
1–2 = N/C
3–4 = N/O
5 = ⏚

XCMD29•• or ZCMD29••
1–2 = N/C
3–4 = N/C
5 = ⏚

5-pin, 7/8" 16 UN

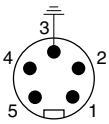

6 A—250 V
1–2 = N/C
4–5 = N/O
3 = ⏚

Pre-wired female connectors XZCP

4-pin, M12

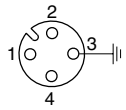

1 = brown
2 = blue
3 = yellow/green ⏚
4 = black

5-pin, M12

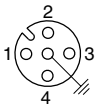

1 = brown
2 = white
3 = blue
4 = black

⏚ = yellow/green

5-pin, 7/8" 16 UN

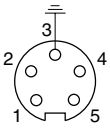

1 = black
2 = blue
3 = yellow/green ⏚
4 = brown
5 = white

Dimensions

XZCP116•L•

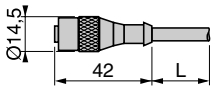

XZCP1264L•

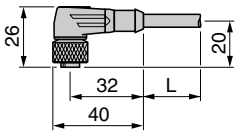

XZCP1771L•

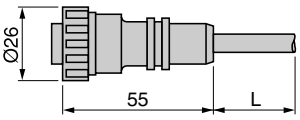

L: cable length 2, 5, or 10 m (6.6, 16.4, or 32.8 ft)

Distances required for plug-in connectors

M12 straight connector

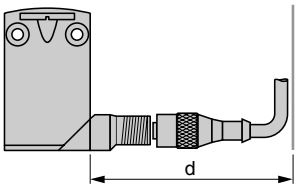

d: min. 65 mm (2.56 in.),
recommended 69 mm (2.72 in.)

M12 elbowed connector

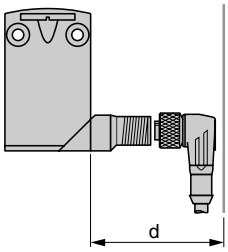

d: min. 42 mm (1.65 in.),
recommended 45 mm (1.77 in.)

Connector on flying lead

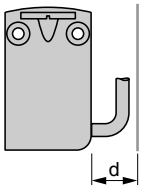

d: min. 20 mm (0.79 in.)

© 1997–2007 Schneider Electric All Rights Reserved

XCMD2•10M12

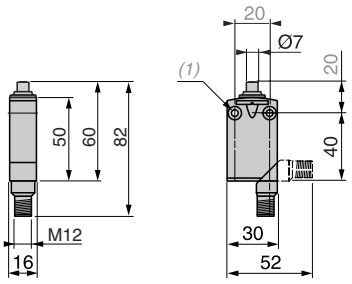

XCMD2•11M12

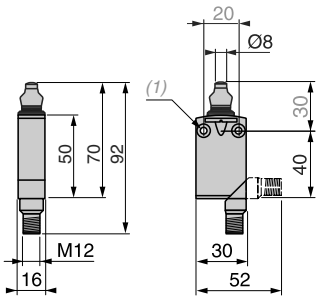

XCMD2•02M12

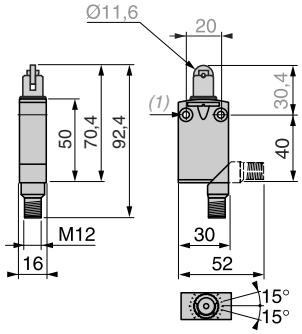

XCMD2•24M12

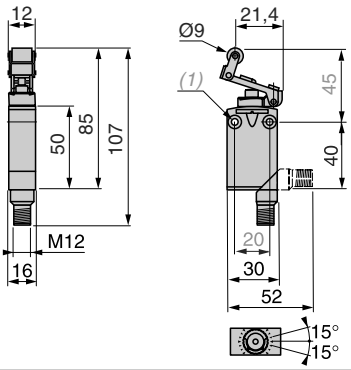

XCMD2•F0M12

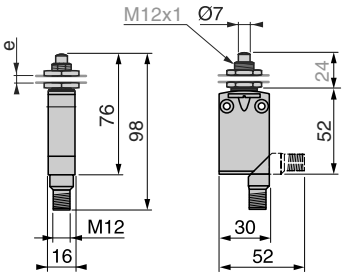

XCMD2•G1M12

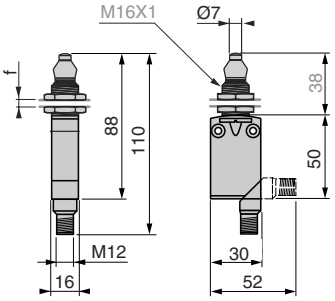

XCMD2•F2M12

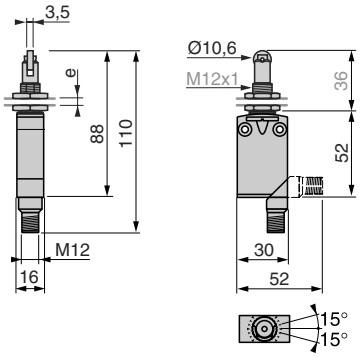

XCMD2•45M12

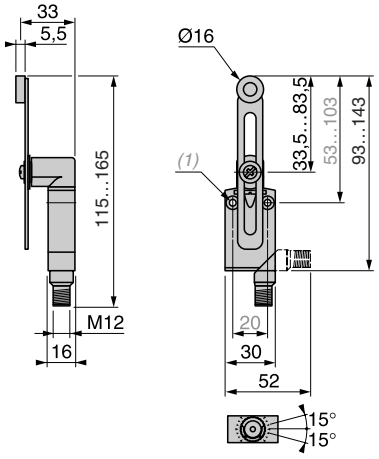

XCMD2•15M12 / 16M12 / 17M12

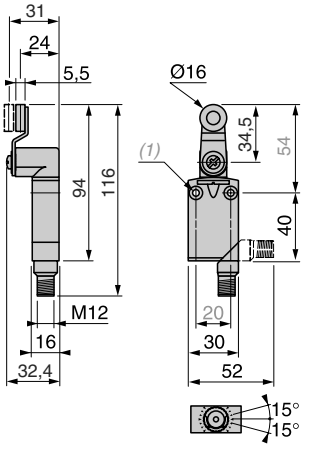

XCMD2•06M12

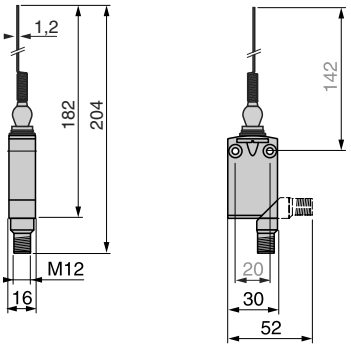

1. 2 mounting holes Ø 4.2 mm (0.17 in.), counterbored Ø 8 mm (0.31 in.) by 4 mm (0.16 in.) deep.

e: 8 mm (0.31 in.) max., panel cut-out Ø 12.5 mm (0.49 in.), mounting nut thickness 3.5 mm (0.14 in.).

f: 8 mm (0.31 in.) max., panel cut-out Ø 16.5 mm (0.65 in.), mounting nut thickness 3.5 mm (0.14 in.).

Telemecanique © 1997–2007 Schneider Electric All Rights Reserved

ZCMD21L08••• + ZCE 10

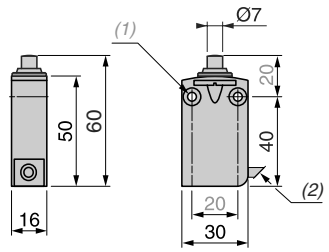

ZCMD21L08••• + ZCE 11

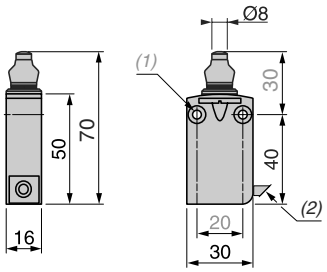

ZCMD21L08••• + ZCE 02

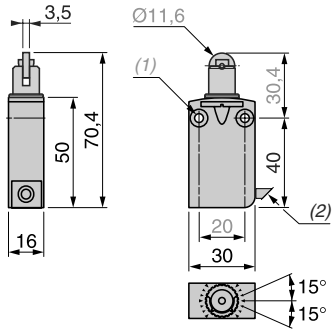

ZCMD21L08••• + ZCE 24

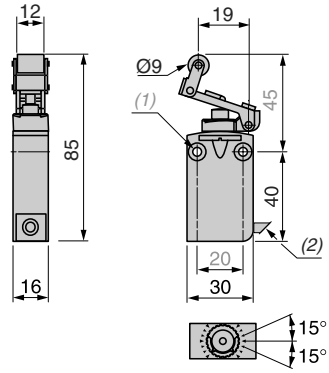

ZCMD21L08••• + ZCE F0

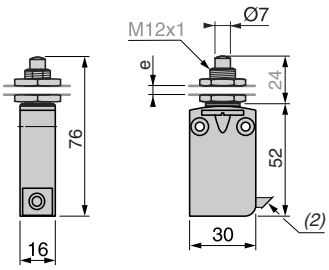

ZCMD21L08••• + ZCE G1

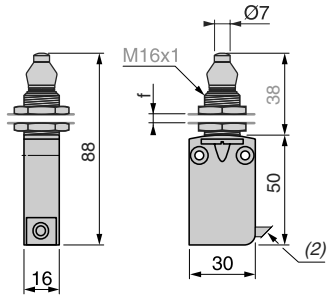

1. 2 mounting holes Ø 4.2 mm (0.17 in.), counterbored Ø 8 mm (0.31 in.) by 4 mm (0.16 in.) deep.
2. Overall diameter 7.5 mm (0.30 in.).

e: 8 mm (0.31 in.) max., panel cut-out Ø 12.5 mm (0.49 in.), mounting nut thickness 3.5 mm (0.14 in.).

f: 8 mm (0.31 in.) max., panel cut-out Ø 16.5 mm (0.65 in.), mounting nut thickness 3.5 mm (0.14 in.).

© 1997–2007 Schneider Electric All Rights Reserved

ZCMD21L08••• + ZCEF2

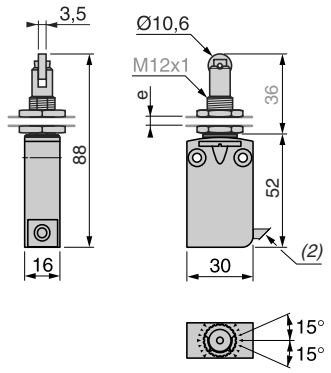

ZCMD21L08••• + ZCE01 + ZCY 15/16/17

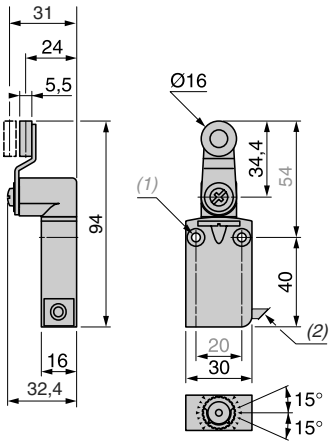

ZCMD21L08••• + ZCE01 + ZCY 45

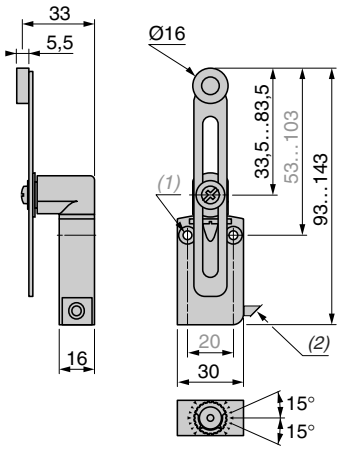

ZCMD21L08••• + ZCE06

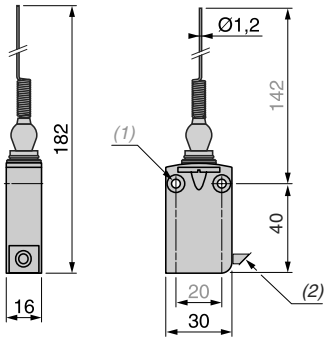

1. 2 mounting holes Ø 4.2 mm (0.17 in.), counterbored Ø 8 mm (0.31 in.) by 4 mm (0.16 in.) deep.
2. Overall diameter 7.5 mm (0.30 in.).

e: 8 mm (0.31 in.) max., panel cut-out Ø 12.5 mm (0.49 in.), mounting nut thickness 3.5 mm (0.14 in.).

f: 8 mm (0.31 in.) max., panel cut-out Ø 16.5 mm (0.65 in.), mounting nut thickness 3.5 mm (0.14 in.).

© 1997–2007 Schneider Electric All Rights Reserved