Accessories


PB500072


PB500222

Mounting 7/2

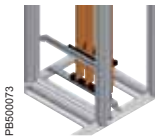
PB500073

Power distribution 7/70


PB500023


PB500218



Cable management 7/100


PB500082

Lighting and power socket 7/126


PB500188


PB500223

Door accessories 7/132


PB500084


PB500217

Earthing accessories 7/140


PB500219


PB500220

Floor accessories 7/143


PB500221

Paint accessories 7/145

Mounting
Installation accessories

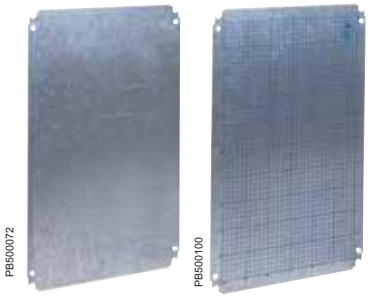

Metal Silkscreened

For ranges S3D, CRN, S3X, PLM, S57

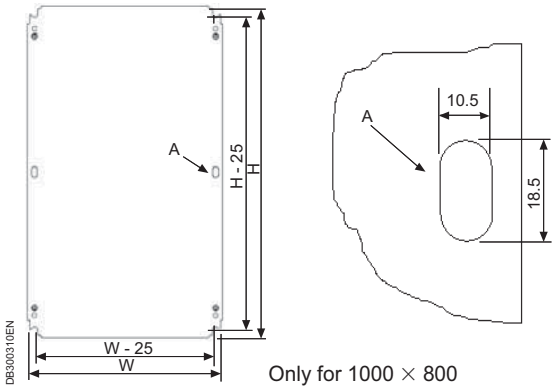

Only for 1000 × 800

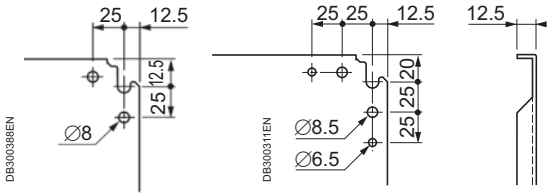

From the size of 1000 × 1000

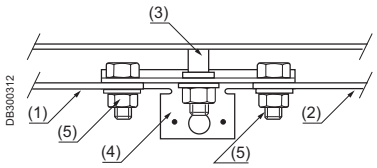

(1) Left plate
(2) Right plate
(3) Central backstud
(4) NSYCRNGSDR bracket (includes fixings)
(5) M8 × 20 mm screw

Plain and silkscreened mounting plates

- Galvanised-steel mounting plates.
- Galvanised-steel mounting plates, silkscreened for easier distribution of the products to be installed.
- Centimetric grid pattern.

Supply: 1 mounting plate and fixing elements.

For wall-mounting enclosure (mm)		H (mm)	W (mm)	Surface (dm^2)	Maximum load (kg)	Weight (kg)	Reference	
Height	Width						Metal	Silkscreened
200	200	150	150	2.3	40	0.4	**NSYMM22**	-
200	300	150	250	3.7	40	0.6	**NSYMM23**	-
250	200	200	150	3	40	0.5	**NSYMM2520**	-
250	400	200	350	7	60	0.8	**NSYMM2540**	-
250	500	200	450	9	60	1.1	**NSYMM2550**	-
300	200	250	150	3.7	60	0.6	**NSYMM32**	-
300	250	250	200	5	60	0.7	**NSYMM3025***	-
300	300	250	250	6.3	60	0.9	**NSYMM33**	-
300	400	250	350	8.8	60	1.25	**NSYMM43***	**NSYMS43***
300	450	250	400	10	60	1.4	**NSYMM3045**	-
300	600	250	550	13.8	60	2	**NSYMM36**	-
400	400	350	350	12.3	60	1.7	**NSYMM44**	**NSYMS44**
400	600	350	550	12.3	90	2.7	**NSYMM64***	**NSYMS64***
400	800	350	750	26.3	90	3.8	**NSYMM48**	-
500	300	450	250	11.3	60	1.65	**NSYMM53***	**NSYMS53***
500	400	450	350	15.8	90	2.2	**NSYMM54**	**NSYMS54**
500	500	450	450	20.3	90	2.95	**NSYMM55***	**NSYMS55***
600	400	550	350	19.3	90	2.7	**NSYMM64**	**NSYMS64**
600	500	550	450	24.8	90	3.6	**NSYMM65**	-
600	600	550	550	30.3	135	4.4	**NSYMM66**	**NSYMS66**
700	500	650	450	29.3	135	4.25	**NSYMM75**	**NSYMS75**
700	600	650	550	35.8	135	5.2	**NSYMM76**	-
800	600	750	550	41.3	135	8.1	**NSYMM86***	**NSYMS86***
800	800	750	750	56.3	150	11	**NSYMM88**	-
1000	600	950	550	52.3	150	10.2	**NSYMM106**	-
1000	800	950	750	71.3	150	13.9	**NSYMM108***	-
1000	1000	950	950	90.3	180	18.1	**NSYMM1010**	-
1200	600	1150	550	63.3	180	12.8	**NSYMM126**	-
1200	800	1150	750	86.3	180	17.35	**NSYMM128***	-
1200	1000	1150	950	109.3	180	21.9	**NSYMM1210***	-
1200	1200	1150	1150	132.3	180	26.45	**NSYMM1212**	-
1400	1000	1350	950	128.3	180	25.7	**NSYMM1410**	-

* Plate with reversible dimensions; it can be installed in enclosures with inverted dimensions.
Example:
Plate ref. **NSYMM64** can be used for the following enclosures:
- H 600 × W 400 mm.
- H 400 × W 600 mm.
- In wall-mounting enclosures with widths of 1000 and 1200 mm, it is possible to install 2 mounting plates at different depths using an additional step slide, **NSYCRNGSDR** (more information on page **7/8**).

See also the accessories



Step slides page **7/8**



Rails and uprights page **7/50**

Mounting
Installation accessories

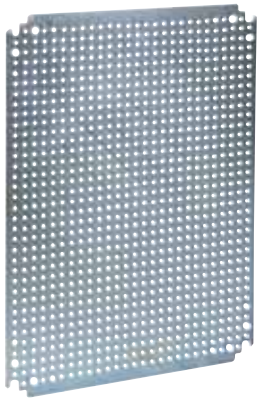
PB500101

For ranges S3D, CRN, S3X, PLM, S57

Microperforated mounting plate

- Galvanised-steel microperforated mounting plates.
- They considerably reduce the products installation time thanks to the holes prepared to receive the self-tapping screws.
- Holes with ∅ 3.6 mm in steps of 12.5 mm.

Supply: 1 mounting plate and fixing elements.

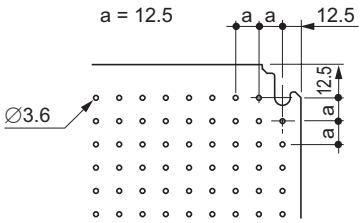

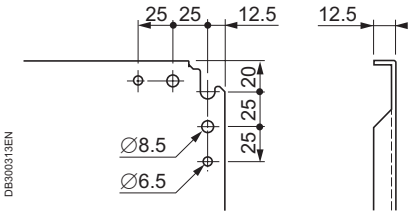

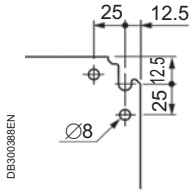

From the size of 1000 × 1000

For enclosures		Height (mm)	Width (mm)	Surface (dm²)	Maximum load (kg)	Weight (kg)	Reference
Height (mm)	Width (mm)						
300	200	250	150	3.8	60	0.55	**NSYMF32**
300	300	250	250	6.3	60	0.95	**NSYMF33**
300	400	250	350	8.8	60	1.35	**NSYMF43***
400	400	350	350	12.3	60	1.85	**NSYMF44**
500	300	450	250	11.3	60	1.70	**NSYMF53**
500	400	450	350	15.8	90	2.40	**NSYMF54**
500	500	450	450	20.3	90	3.05	**NSYMF55**
600	400	550	350	19.3	90	2.95	**NSYMF64***
600	500	550	450	24.8	90	3.60	**NSYMF65**
600	600	550	550	30.3	135	4.55	**NSYMF66**
700	500	550	450	29.3	135	4.40	**NSYMF75**
800	600	750	550	41.3	135	7.70	**NSYMF86***
800	800	750	750	56.3	150	10.55	**NSYMF88**
1000	600	950	550	52.3	150	9.75	**NSYMF106**
1000	800	950	750	71.3	150	13.30	**NSYMF108***
1000	1000	965	965	93.1	180	17.10	**NSYMF1010**
1200	600	1165	565	65.8	180	12.05	**NSYMF126**
1200	800	1165	765	89.1	180	16.35	**NSYMF128**
1200	1000	1165	965	112.4	180	20.65	**NSYMF1210***

* Reversible mounting plate; it can be installed in enclosures with inverted dimensions.
Example:
Plate ref. **NSYMF64** can be used for the following enclosures:
- H 400 × W 600 mm.
- H 600 × W 400 mm.

See also the accessories

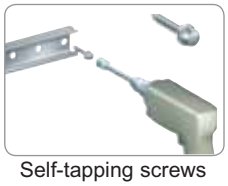
PB500108

Self-tapping screws ref. **NSYS16M5HS** page **7/67**


PB500111

Step slides page **7/8**

Mounting
Installation accessories

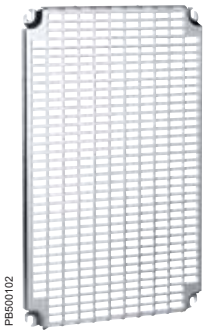

For ranges S3D, CRN, S3X, PLM, S57

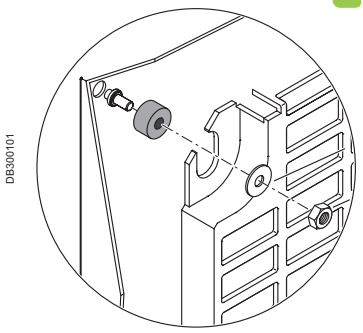

Mounting-plate elevators. Supply: 6 elevators.
Ref. **NSYEMR**

Telequick mounting plate

- Zinc-coated-steel Telequick mounting plates. They allow cable guides and ducting and other installation accessories to be clipped on, making it easier to install switchgear.
- 11 × 26 mm slots.
- Switchgear fixing by clip-on nuts.

Supply: 1 mounting plate and fixing elements.

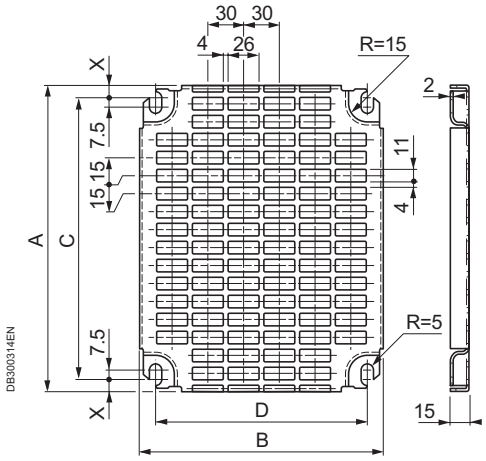

For enclosures (mm)		Dimensions (mm)					Surface (dm²)	Weight (kg)	No. of perforations in		Reference
Height	Width	A	B	C	D	X			Height	Width	
300	200	255	153.7	231.3	125	11.85	3.3	0.30	16	5	**NSYMR32**
300	250	253	228	231.3	175	10.85	5.1	0.40	16	8	**NSYMR3025**
300	300	255	251	231.3	225	11.85	5.8	0.50	16	9	**NSYMR33**
300	400	255	351	235	325	10	8.3	0.75	18	11	**NSYMR34**
400	300	348.7	251	325	225	11.85	8.1	0.70	22	9	**NSYMR43**
400	400	345	351	325	325	10	11.5	1	24	11	**NSYMR44**
400	600	345	551	325	525	10	18.4	1.55	24	19	**NSYMR46**
500	300	453.7	251	430	225	11.85	10.7	0.85	29	9	**NSYMR53**
500	400	450	351	430	325	10	15.2	1.30	31	11	**NSYMR54**
500	500	450	451	430	425	10	19.7	1.60	31	14	**NSYMR55**
600	400	555	351	530	325	12.5	18.8	1.50	38	11	**NSYMR64**
600	500	555	451	535	425	10	24.4	2	38	14	**NSYMR65**
600	600	555	551	535	625	10	29.9	2.50	38	17	**NSYMR66**
600	800	551	750	531	724	10	40.7	3.10	36	24	**NSYMR68**
700	500	645	451	625	425	10	28.4	2.35	44	14	**NSYMR75**
800	600	750	551	730	525	10	40.7	3.20	51	17	**NSYMR86**
800	800	750	751	730	725	10	55.7	3.95	51	24	**NSYMR88**
800	1000	751	951	731	925	10	70.8	5.30	49	31	**NSYMR810**
1000	600	945	551	925	525	10	51.4	4.05	64	17	**NSYMR106**
1000	800	945	751	925	725	10	70.3	5	64	24	**NSYMR108**
1000	1000	945	951	925	925	10	89.2	6.50	62	31	**NSYMR1010**
1000	1200	951	1151	931	1125	10	108.8	7.45	62	37	**NSYMR1012**
1200	600	1145	551	1125	525	10	62.4	5.70	75	17	**NSYMR126**
1200	800	1145	751	1125	725	10	85.3	6.40	75	24	**NSYMR128**
1200	1000	1145	951	1125	925	10	108.2	7.80	75	31	**NSYMR1210**
1400	1000	1345	951	1325	925	10	127.3	9.10	88	31	**NSYMR1410**

To install two mounting plates in a single enclosure, also order reference **NSYCRNGSDR**.
To install the plate in an enclosure with 6 studs, also order reference **NSYEMR**.

See also the accessories



Clip-on nuts
page **7/27**



Lyre-shaped clamp for plate
ref. **NSYGCR**
page **7/124**



Plastic cable support
ref. **NSYSPC**
page **7/123**

Mounting
Installation accessories



Bakelite Polyester

For ranges S3D, CRN, S3X, PLM

Bakelite and polyester mounting plate

- Made in black bakelite RAL-9005 or from polyester reinforced with fibreglass, RAL-7035 grey colour.
- They are coupled directly to the rear of the actual enclosure or to the sliding plate supports.
- Double-door enclosures offer the option of installing one full plate or two individual plates. See guide below.

Supply: 1 mounting plate and fixing elements.

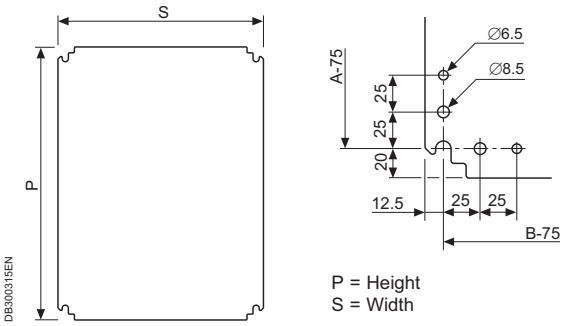

P = Height
S = Width

For enclosure (mm)		Dimensions (mm)		Thickness (mm)		Weight (kg)		Reference	
Height (A)	Width (B)	Height (P)	Width (S)	Bakelite	Polyester	Bakelite	Polyester	Bakelite	Polyester
300	200	265	150	4	4	0.2	0.3	**NSYMB32**	**NSYMPP32**
300	250	265	200	4	4	0.2	0.4	**NSYMB3025**	**NSYMPP3025**
300	300	265	250	4		0.3		**NSYMB33**	-
400	300	325	250	4	4	0.5	0.7	**NSYMB43**	**NSYMPP43**
500	400	465	350	4	4	0.9	1.2	**NSYMB54**	**NSYMPP54**
600	400	565	350	4	4	1.1	1.4	**NSYMB64**	**NSYMPP64**
600	500	565	450	4		1.4		**NSYMB65**	-
700	500	665	450	4	4	1.7	2.1	**NSYMB75**	**NSYMPP75**
800	600	765	550	4	5	2.3	3.8	**NSYMB86**	**NSYMPP86**
1000	600	965	550	5		4.2		**NSYMB106**	-
1000	800	965	750	5	5	5.7	6.5	**NSYMB108**	**NSYMPP108**
1200	1000	1150	950	5		8.3		**NSYMB1210**	-

*To install 2 individual plates, you will need reference **NSYCRNGSDR**; see details on page **7/9**.



Insertable nuts

For devices installation on the mounting plate.

Supply: 50 units.

References per unit. To be ordered in multiples of 50 (50, 100, 150, etc.).

Insertable nuts	
Thread	Reference
M3	**NSYTE3**
M4	**NSYTE4**
M5	**NSYTE5**
M6	**NSYTE6**
M8	**NSYTE8**
M10	**NSYTE10**
M12	**NSYTE12**

See also the accessories



Step slides for polyester enclosures pages **6/31** and **6/62**



Step slides page **7/8**

Mounting
Installation accessories



For ranges
S3D, CRN, S3X,
PLM

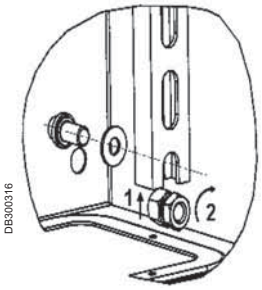

DIN mounting plate
adapter
Ref. **NSYAMCSF**

DIN-rail chassis

- Aluminium uprights.
- Steel profiles (symmetric section type A or B according to the reference).
- Screws, washers and nuts required to install the mounting plate, supplied.
- Gasket adapters, ref. **NSYAMCSF** (batch of 4 adapters, non supplied).

Composition: 1 DIN-rail chassis and fixings.

For enclosure		Type of rails	Number of rails	Reference
Height	Width			
300	300	B	4	**NSYMD33**
400	300	B	4	**NSYMD43**
500	400	B	4	**NSYMD54**
600	400	B	6	**NSYMD64**
600	600	A	6	**NSYMD66**
700	500	B	6	**NSYMD75**
800	600	A	6	**NSYMD86**
1000	800	A	6	**NSYMD108**
1200	800	A	7	**NSYMD128**
Batch of 4 adapters				**NSYAMCSF**

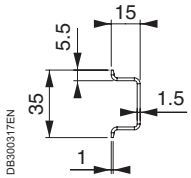

Type A

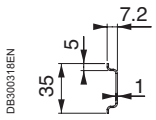

Type B

See also the accessories



Slides
page **7/7**



Stand-offs
page **7/64**



Profiles
page **7/50**

Mounting
Installation accessories


PB500777


PB500780


PB500781


PB500781

For ranges
S3D, CRN, S3X,
PLM

Slides and brackets

They allow the depth of the plates and rails to be adjusted.
- Length of 90 mm, with bracket for enclosures with depths of 150 and 200 mm.
- Length of 130 mm, with bracket for enclosures with depths of 250 and 300 mm.
- Bracket for slides (customised mounting plate).

Composition: 10 units.

References per unit. To be ordered in multiples of 10 (10, 20, 30, etc.).

Description	Reference
90-mm slide	**NSYSB90**
130-mm slide	**NSYSB130**
Bracket	**NSYFB**

See also the accessories


PB500783

Fixings
page **7/67**

Mounting
Installation accessories


PB500782

For ranges
S3D, CRN, S3X

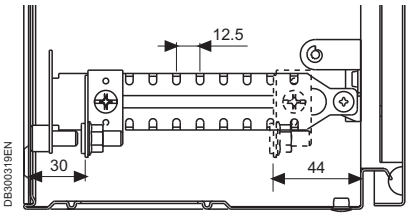

DB300319EN

Step slides for mounting plate

Set of 4 supports intended for installation in enclosures with depths of 200, 250, 300 and 400 mm. The rail allows the depth of the plate and other accessories to be adjusted in steps of 12.5 mm.

Supply: 4 step slides.

For enclosure depth (mm)	Reference
200	**NSYSDCR200**
250	**NSYSDCR250**
300	**NSYSDCR300**
400	**NSYSDCR400**
300	**NSYSDRSDCR300***
400	**NSYSDRSDCR400***

*For installation in enclosures from 1000 to 1200 mm.

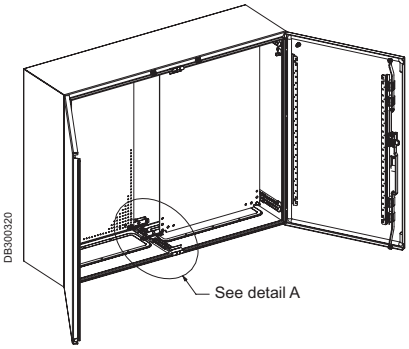

DB300320

Step slides for 2 mounting plates in one enclosure

In wall-m ounting enclosures with widths of 1000 and 1200 mm, it is possible to install 2 mounting plates at different depths using an additional step slide, **NSYCRNGSDR**.

Supply: 2 step slides.

Set of 2 step slides
NSYCRNGSDR

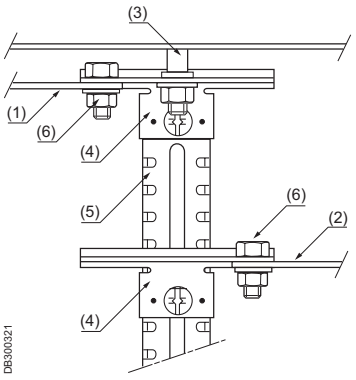

DB300321

(1) Left plate
(2) Right plate
(3) Central backstud
(4) NSYCRNGSDR bracket (includes fixings)
(5) NSYSDRSDCR sliding rail
(6) M8 × 20 mm screw

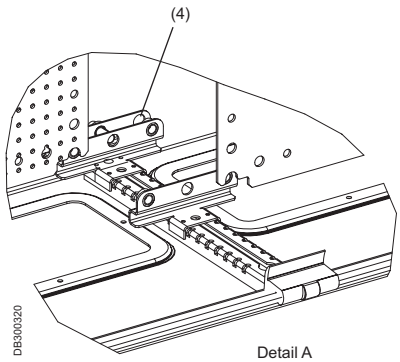

DB300320
Detail A

See also the accessories


PB500176

Step slides for polyester enclosures
pages **6/31** and **6/62**

Mounting
Installation accessories


PB500105

For ranges
S3D, CRN, PLM,
S3X

Aluminium vertical rails

- Fixing in the enclosure with M8 nuts, ref. **NSYAMCSF** (batch of 4 adapters to be ordered separately).
- Material: aluminium (length: 1200 mm, in steel).

Height	Material	Reference	Composition
300	Aluminium	**NSYMDVR3**	10
400	Aluminium	**NSYMDVR4**	10
500	Aluminium	**NSYMDVR5**	10
600	Aluminium	**NSYMDVR6**	10
700	Aluminium	**NSYMDVR7**	10
800	Aluminium	**NSYMDVR8**	10
1000	Aluminium	**NSYMDVR10**	10
1200	Steel	**NSYMDVR12**	2
Length: 3 m	Aluminium	**NSYMDVR3M**	10

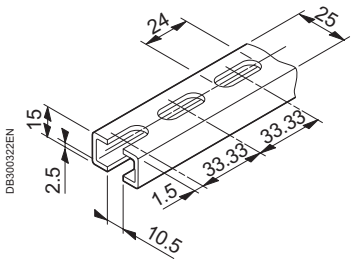

DB300322EN

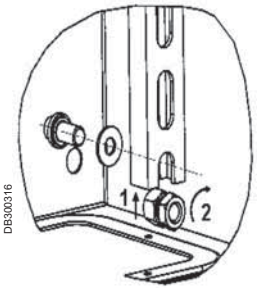

DB300316

Ref. **NSYAMCSF**


PB500783

Screw with slotted hexagonal head and captive washer

Type	Reference				
	10 mm	12 mm	16 mm	18 mm	Slide nut
M4	**NSYS10M4H**	-	**NSYS16M4H**	-	**NSYNM4**
M5	-	**NSYS12M5H**	-	**NSYS16M4H**	**NSYNM5**
M6	-	**NSYS12M6H**	-	**NSYS18M6H**	**NSYNM6**

Mounting
Installation accessories



For ranges
SF, SM, SFX, SMX

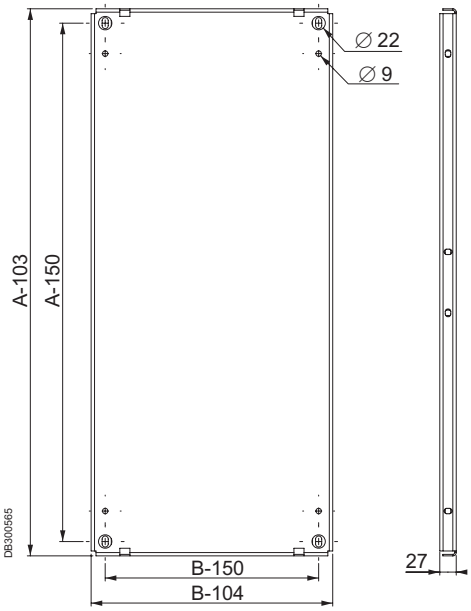

> Advantage:

The Spacial.pro tool helps determine the optimum dimensions of the mounting plate.

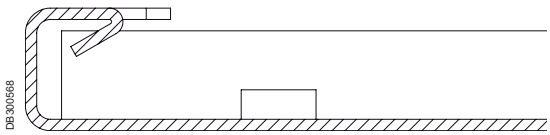

> Advantage:

The triple fold of the vertical edges of the mounting plate contributes to increasing the latter's rigidity and increases handling safety by preventing finger cuts.

Mounting plate

- Plate provided with reinforcement flange around the entire perimeter. The vertical edges are provided with a triple fold, to prevent finger cuts.
- Depth adjustable with a pitch of 25 mm, provided with plastic shoe for easier sliding.
- Once the plate is fixed, in advanced position, the sliding shoe can be easily removed, to increase the available plate surface.
- Material: galvanised steel.
- Maximum load: 600 kg in the back of the enclosure and 500 kg in the intermediate position.
- Installation options:

– At the sides of the enclosure with the orthogonal brackets (see page **7/13**).
– Back-to-back, with the brackets for fixing the mounting plates in back-to-back position (see page **7/16**).

- In sets made up of two or more enclosures with mounting plates, it is possible to obtain a continuous plate surface using intermediate mounting plates (see page **7/15**).

Supply: one mounting plate and sliding shoes.

Nominal dimensions (mm)		Reference
Height (A)	Width (B)	
1200	600	**NSYMP126**
	800	**NSYMP128**
	1000	**NSYMP1210**
	1200	**NSYMP1212**
1400	600	**NSYMP146**
	800	**NSYMP148**
	1000	**NSYMP1410**
	1200	**NSYMP1412**
1600	600	**NSYMP166**
	800	**NSYMP168**
	1000	**NSYMP1610**
	1200	**NSYMP1612**
1800	600	**NSYMP186**
	800	**NSYMP188**
	1000	**NSYMP1810**
	1200	**NSYMP1812**
	1600	**NSYMP1816**
2000	600	**NSYMP206**
	800	**NSYMP208**
	1000	**NSYMP2010**
	1200	**NSYMP2012**
	1600	**NSYMP2016**
2200	600	**NSYMP226**
	800	**NSYMP228**
	1000	**NSYMP2210**
	1200	**NSYMP2212**

Mounting
Installation accessories

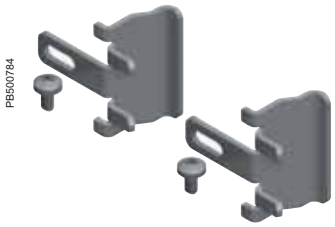

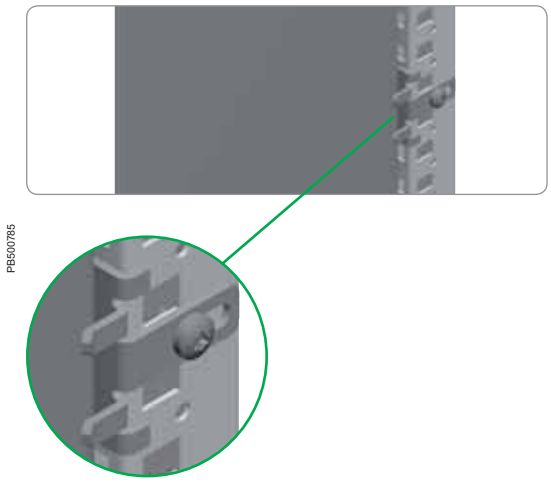

Intermediate fixing of the mounting plate, located in the back of the enclosure

- Support for additional fixing of the mounting plate, at any height of the plate, when the plate is mounted in the back of the enclosure.
- The supports minimise the vibration of the plate during the transport and operation of the panel.
- The supports are fixed to the structure when the plate is already located in the back of the enclosure.
- **Spacial SM:** fixing to 40-mm universal cross rails (1 row), installed vertically in the back of the enclosure, see page **7/35**.
- Material: zinc-coated steel.

Supply: ten units and fixing elements.

Reference by unit. Order by multiples of 10 (10, 20, 30...).

Reference
NSYSMPFB

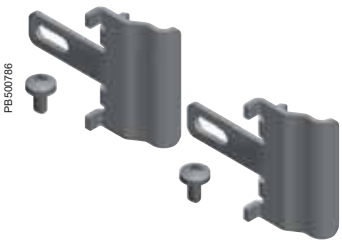

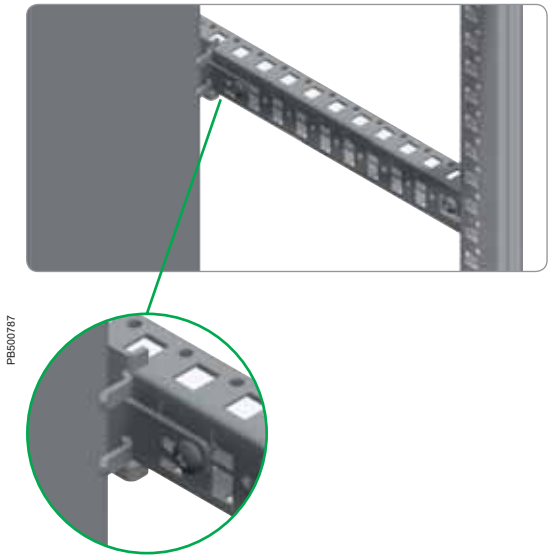

Intermediate fixing of the mounting plate, in advanced position

- Support for additional fixing of the mounting plate, at any height of the plate, when the plate is mounted in advanced position.
- The supports minimise the vibration of the plate during the transport and operation of the panel.
- The supports are mounted on light cross rails or on 40-mm (1 row) universal or quick-fixing cross rails (not supplied) (see page **7/35**).
- Material: zinc-coated steel.

Supply: ten units and fixing elements.

Reference by unit. Order by multiples of 10 (10, 20, 30...).

Reference
NSYSMPFA

Mounting
Installation accessories


PB500788

Reinforcement for mounting plate

- Reinforcement kit for transversal mounting plate.
- Provides extra rigidity to the mounting plates and absorbs vibrations.
- Can be used as a support for fixing very heavy elements.
- Material: zinc-coated steel.
- Thickness: 1.5 mm.

Supply: two profiles, four supports for fixing to the mounting plate and fixing elements.

Nominal dimensions (mm)	Reference
Width	
800	**NSYMPRK8**
1000	**NSYMPRK10**
1200	**NSYMPRK12**
1600	**NSYMPRK16**

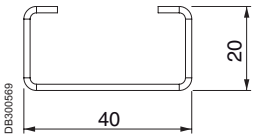

DB300569

Mounting
Installation accessories

For ranges SF, SM, SFX, SMX

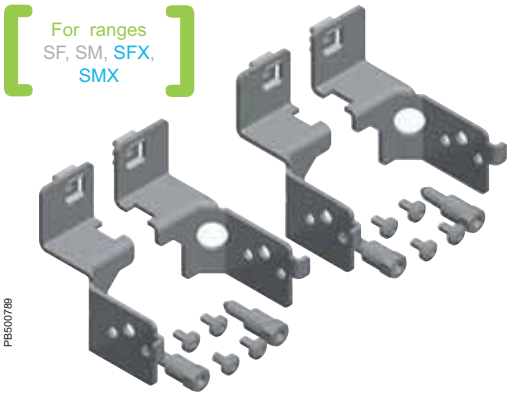

PB500789

Mounting plate fixing brackets

- Mounting plate fixing brackets for direct mounting on the structure of the enclosure.
- Adjustable depth with a pitch of 25 mm.
- Maximum load (4 brackets): 600 kg.
- Material: zinc-coated steel.

Supply: four brackets and fixing elements.

Reference	For enclosure
NSYSFPB	Spacial SF
NSYSMPB	Spacial SM, Spacial SFX, Spacial SMX

For ranges SF, SFX

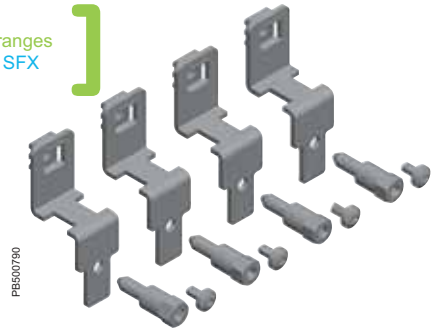

PB500790

Orthogonal brackets

- Orthogonal brackets designed for the installation of mounting plates on the sides of the enclosure.
- In the event of installing one plate in the back of the enclosure and one plate at the side, they must both be installed using orthogonal brackets.
- Maximum load (4 brackets): 600 kg.
- Material: zinc-coated steel.
- Spacial SFX: in order to mount the lateral mounting plate is necessary to remove the one on the back and its fixing brackets.

Supply: four brackets and fixing elements.

Reference
NSYSMPSB

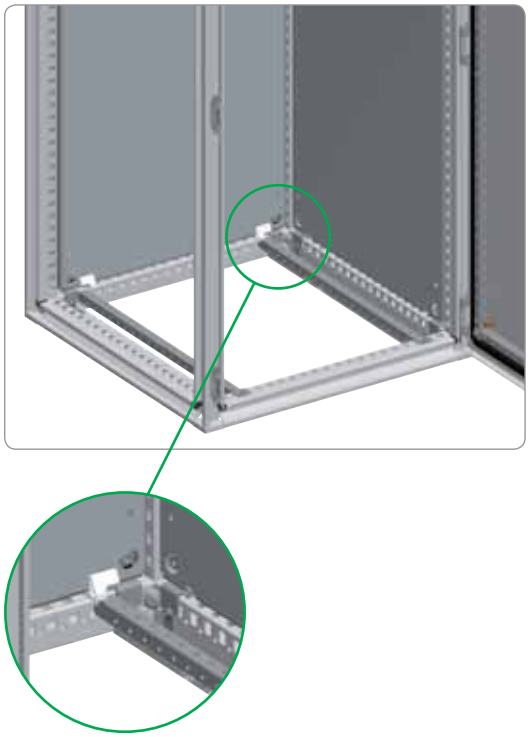

PB500791

Mounting
Installation accessories

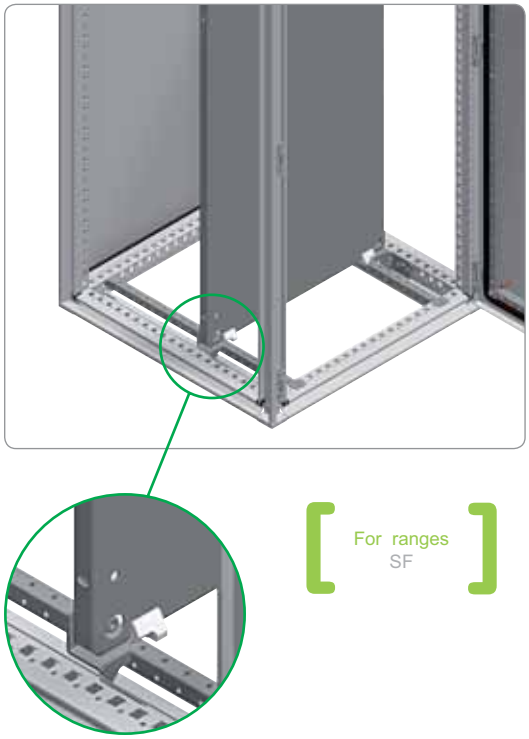

PB500792

For ranges SF

Mounting plate sliding rails

- Rails which the mounting plate slides along when inserted in the enclosure.
- Once the mounting plate is installed and fixed to the brackets, the sliding rails can be removed to maximise the cable passage surface, and can be installed depthwise in other positions.
- Material: zinc-coated steel.

Supply: two rails and fixing elements.

Nominal dimensions (mm)	Reference
Depth	
400	**NSYSMPS4**
500	**NSYSMPS5**
600	**NSYSMPS6**
800	**NSYSMPS8**

Mounting
Installation accessories

For ranges SF

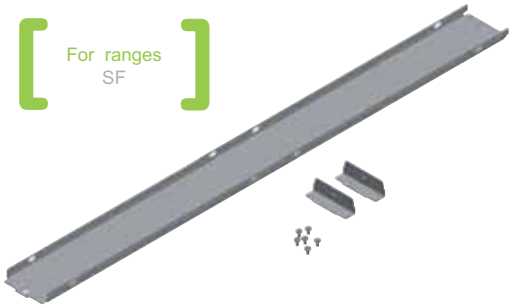

PB500793

Intermediate mounting plate

- Intermediate plate used to obtain a continuous surface of the mounting plate at enclosure suites.
- Adjustable depth with a pitch of 25 mm. When the mounting plates are located in the back of the enclosure, the vertical profiles of the structure are flush with the plates, acting as an intermediate mounting plate. In this case the intermediate plate cannot be installed.
- Material: galvanised steel.

Supply: one intermediate plate and fixing elements.

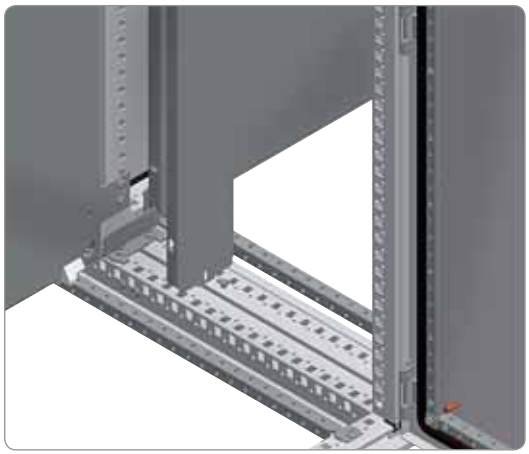

PB500794

Nominal dimensions (mm) Height (A)	Reference
1200	**NSYSIMP12**
1400	**NSYSIMP14**
1600	**NSYSIMP16**
1800	**NSYSIMP18**
2000	**NSYSIMP20**
2200	**NSYSIMP22**

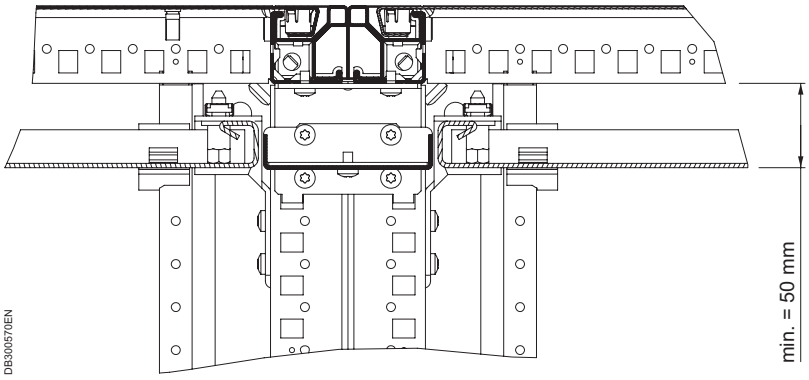

DB300570EN

7

Mounting
Installation accessories

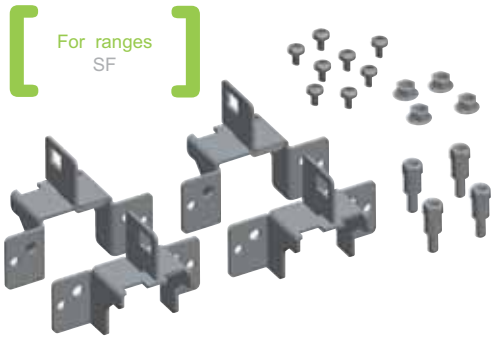

PB500795

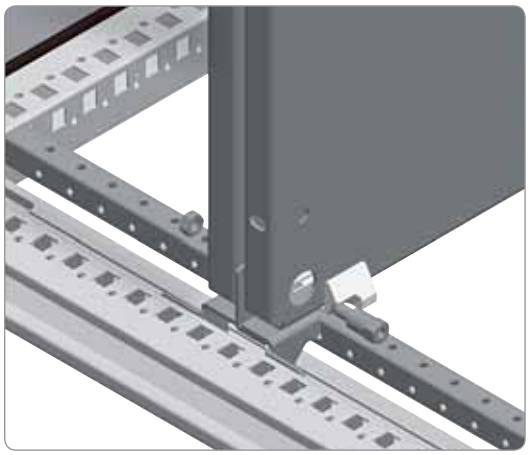

PB500796

Brackets for fixing mounting plates in back-to-back position

- Brackets for fixing two mounting plates, in back-to-back position, doubling the mounting surface.
- Adjustable with a pitch of 25 mm.
- Material: zinc-coated steel.

Supply: four brackets for fixing back-to-back and fixing elements.

Reference
NSYSBTB

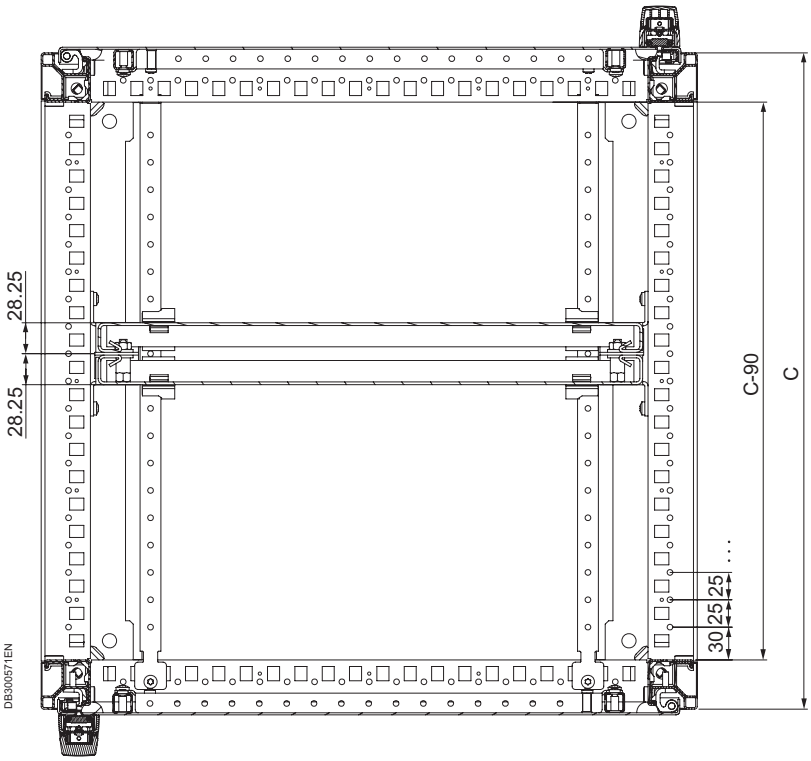

DB300571EN

Mounting
Installation accessories

For ranges SF

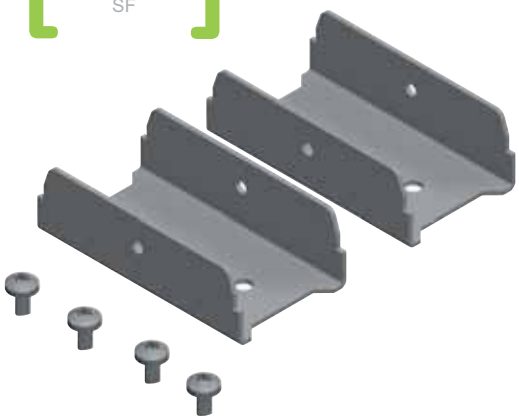

PB500797

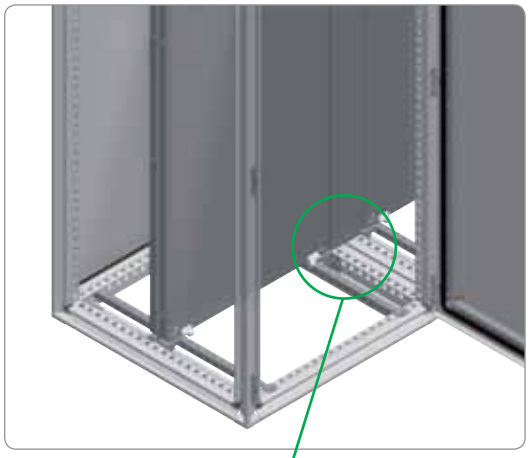

PB500798

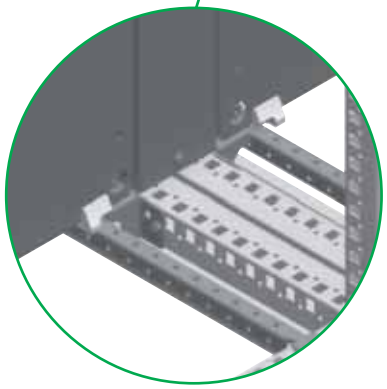

Brackets for fixing intermediate mounting plates in back-to-back position

- Brackets for fixing two intermediate mounting plates, in back-to-back position, doubling the mounting surface.
- Adjustable with a pitch of 25 mm.
- Material: zinc-coated steel.

Supply: 2 brackets for fixing intermediate plates back-to-back and fixing elements.

Reference
NSYSIBTB

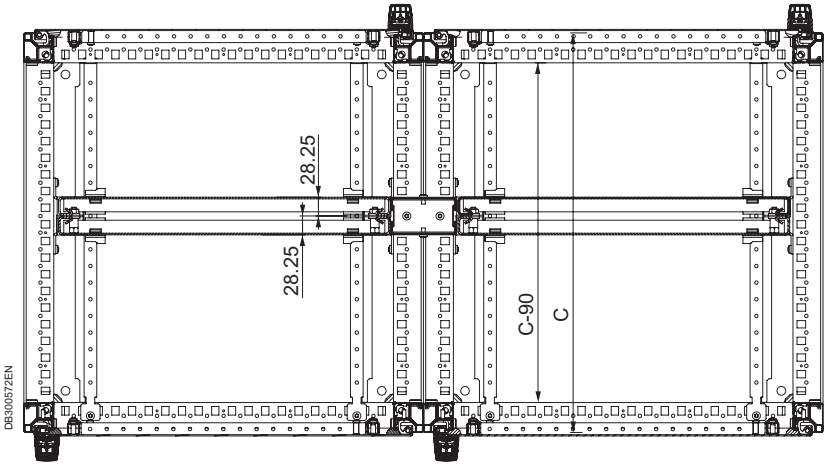

DB300572EN

7

Mounting
Installation accessories

For ranges SF, SFX

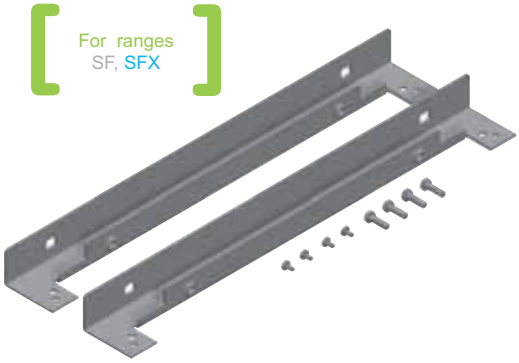

PB500799

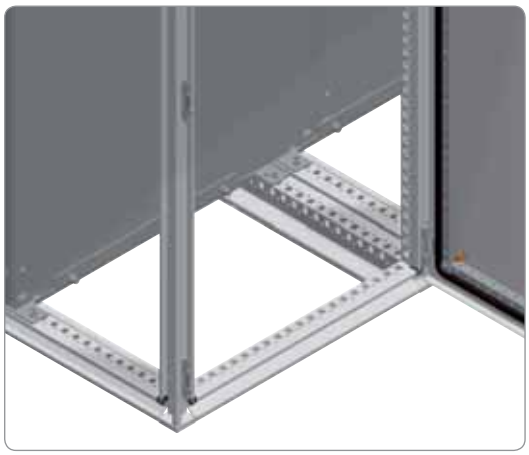

PB500800

Side entry rails for the mounting plate

- Side entry device for the mounting plates when coupling **Spacial SF** enclosures or **Spacial SFX**.
- The mounting plates can be coupled with one another, and are fixed to the side entry guide by pressure.
- Material: zinc-coated steel.

Supply: two rails and fixing elements.

Nominal dimensions (mm) Width (B)	Reference
600	**NSYSMPSE6**
800	**NSYSMPSE8**
1000	**NSYSMPSE10**
1200	**NSYSMPSE12**

Length of joined Spacial SF enclosures (mm)	Example of Spacial SF enclosure combination width (mm) (B)	Example of combining mounting plates by width (mm)	Useful length (mm)
1200	1200	600 + 800	1192
1400	600 + 800	600 + 1000	1392
1600	2 × 800	800 + 1000	1592
1800	3 × 600	800 + 1200	1792
2000	2 × 1000	1000 + 1200	1992
2200	600 + 2 × 800	1200 + 1200	2192
2400	3 × 800	1600 + 1000	2392
		3 × 600 + 1000	2384
2600	2 × 1000 + 600	1600 + 1200	2592
		3 × 600 + 1200	2584
2800	2 × 1000 + 800	4 × 800	2784
3000	3 × 1000	3 × 800 + 1000	2984
3200	2 × 1000 + 1200	3 × 800 + 1200	3184
3400	3 × 800 + 1000	800 + 3 × 1000	3384
3600	3 × 1200	4 × 1000	3584
3800	800 + 3 × 1000	600 + 3 × 1200	3784
4000	4 × 1000	800 + 3 × 1200	3984

Mounting
Installation accessories

For ranges SF

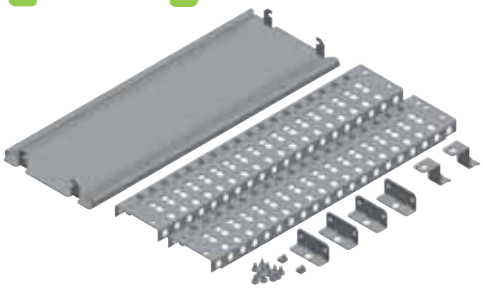

PB500801

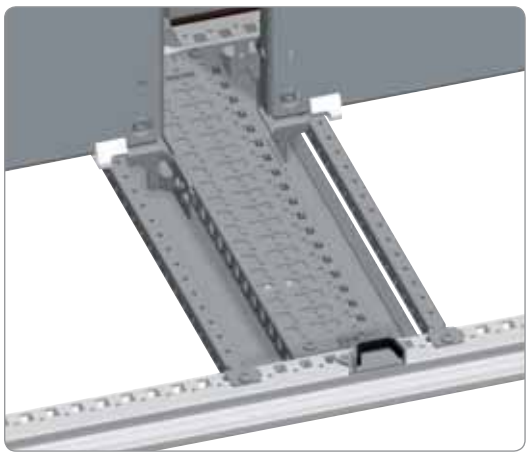

PB500802

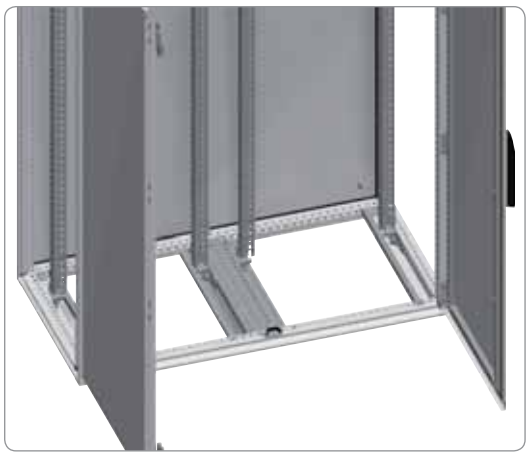

PB500803

Kit for adapting two-door enclosures

- Allows the installation of two mounting plates as if in two independent enclosures.
- A set of brackets for fixing mounting plates ref. **NSYSMPB** is required for this.
- Option of installing an intermediate mounting plate.
- Valid for enclosures with widths of 1200 and 1600 mm.
- In the event of installing a cable-gland plate for a width of 1200 mm, it is necessary to install two with a width of 600 mm, and for widths of 1600 mm, two with a width of 800 mm.

Supply: two 90 mm cross rails, cable-gland plate support, 2 brackets for central fixing of the roof and fixing elements.

Nominal dimensions (mm)	Reference
Depth (C)	
400	**NSYSMP2D4**
500	**NSYSMP2D5**
600	**NSYSMP2D6**
800	**NSYSMP2D8**

Mounting
Installation accessories

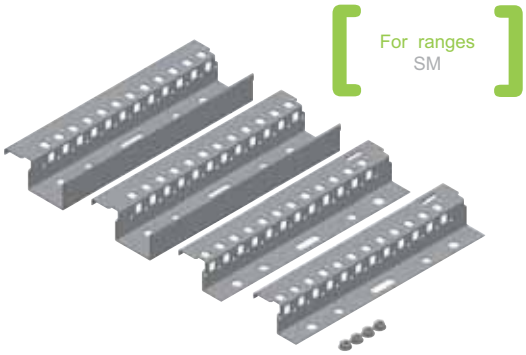

PB500804

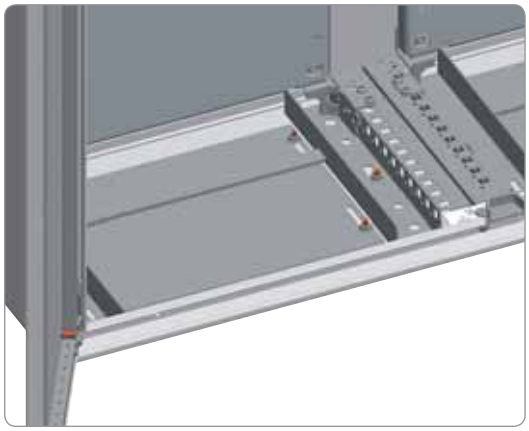
PB500805

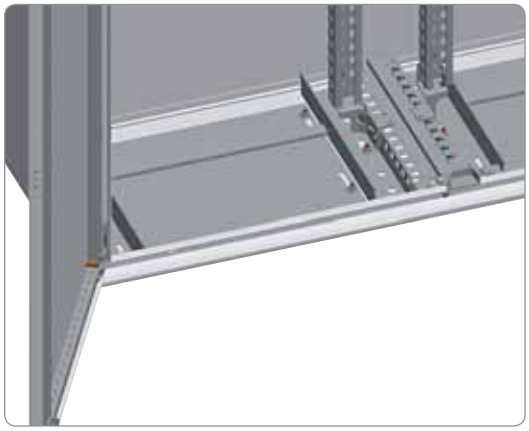
PB500806

Top/bottom adjustment rails

- Allows the installation of two mounting plates or vertical uprights in enclosures with a width of 1200 mm, as if in two independent enclosures.
- A set of mounting plate fixing brackets ref. **NSYSMPB** is required for this.
- Optional installation of an intermediate mounting plate.

Supply: 2 rails, top and bottom, and fixing elements.

Nominal dimensions (mm)	Reference
Depth	
300	**NSYSTBR3**
400	**NSYSTBR4**
500	**NSYSTBR5**
600	**NSYSTBR6**

Mounting
Installation accessories


PB500807

Partial mounting plate

- Partial mounting plate, provided with reinforcement flange on its four sides.
- Fixing options:

– **Spacial SF, SFX:**
  - Fixing to the vertical uprights of the structure.
  - Fixing to the technical or standard vertical uprights, see page **7/23**.
  - For installations in advanced position, fixing to cross-rails, see page **7/35**.

– **Spacial SM:**
  - Fixing by means of adaptation profiles and 40-mm universal cross-rails (1 row) in vertical position, or also on horizontal universal cross-rails.
  - It can be mounted horizontally, as a tray, by means of depthwise cross rails, see page **7/35**.

- Material: galvanised steel.

Supply: partial mounting plate and fixing elements.

For ranges SF

Nominal dimensions (mm) Width (B)	Plate height (mm) (H)	Plate length (mm) (B-100)	Reference
600	247	500	**NSYSPMP2560**
	247	750	**NSYSPMP2575**
	397	500	**NSYSPMP4060**
	597	500	**NSYSPMP6060**
800	247	700	**NSYSPMP2580**
	397	700	**NSYSPMP4080**
	597	700	**NSYSPMP6080**
1000	247	900	**NSYSPMP25100**
	397	900	**NSYSPMP40100**
	597	900	**NSYSPMP60100**
1200	247	1100	**NSYSPMP25120**
	397	1100	**NSYSPMP40120**
	597	1100	**NSYSPMP60120**
1600	397	1100	**NSYSPMP40160**

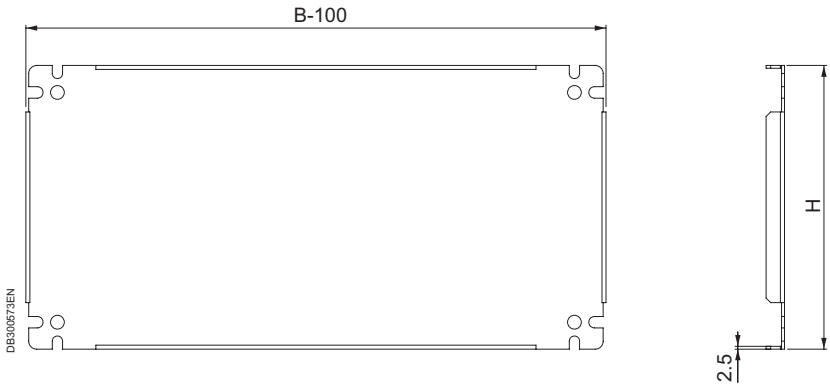


PB500808

Self-tapping screw

- Self-tapping screw, hexagonal head, 4.8 × 16 mm thread.
- Drilling capacity: thicknesses between 1.75 and 4 mm.

Supply: 100 units.

To be ordered in multiples of 100 (100, 200, 300, etc.).

Reference
NSYS16M5HS

Mounting
Installation accessories

Examples of partial plate installation

- **Spacial SF, SFX:**



(1)** Plate mounted on structure.

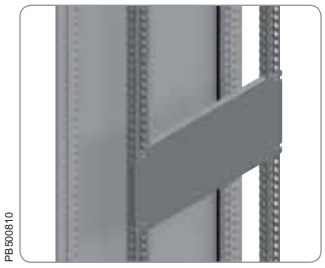

(2)* Plate mounted on technical vertical uprights.



(3)* Plate mounted on standard vertical uprights.



(4) Plate mounted on cross rails.



(5) Plate mounted on cross rails, horizontal fixing.

*Fixings not supplied.
** Not possible in enclosures Spacial SFX.

- **Spacial SM, SMX:**



(1)* Plate mounted on technical vertical uprights.



(2)* Plate mounted on standard vertical uprights.



(3)* ** Plate mounted on cross rails.

*Fixings not supplied.
** Not possible in enclosures Spacial SMX.

Mounting
Installation accessories

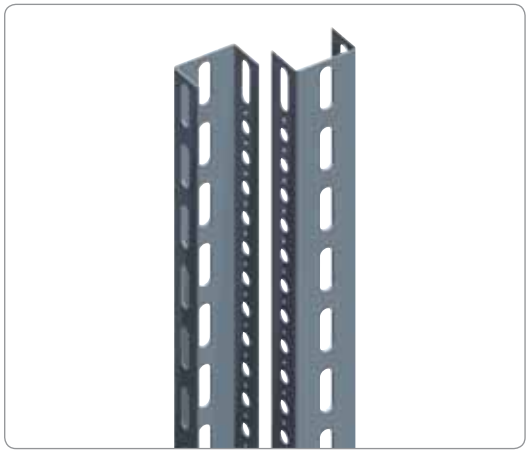
PB500482

Standard uprights

- Vertical uprights for fixing plates and rails.
- They can be fixed on the mounting plate fixing brackets or on the upright fixing bracket, ref. **NSYMFB**.
- Adjustable height with a pitch of 25 or 50 mm.
- Material: galvanised steel.
- Thickness: 2 mm.

Supply: two standard vertical uprights.

Nominal dimensions (mm)	Reference
Height (A)	Standards
1800	**NSYVR18**
2000	**NSYVR20**
2200	**NSYVR22**

For ranges SF, SM, SFX, SMX

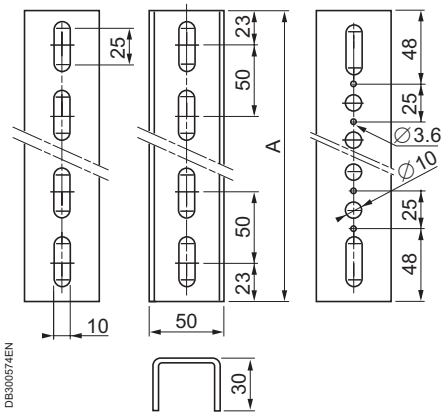

DB300574EN

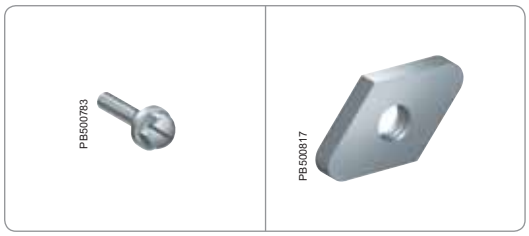
PB500783

PB500817

Nuts and screws for standard uprights

- Flat nut for standard uprights.
- Hexagonal screw with washer.

Nuts and screws for standard vertical upright	Supply (units)	Reference
M6 flat nut	50	**NSYFNM6**
M8 flat nut	50	**NSYFNM8**
M6 × 12 screw	100	**NSYS12M6H**
M6 × 16 screw	100	**NSYS16M6H**
M6 × 18 screw	100	**NSYS18M6H**
M8 × 16 screw	100	**NSYS16M8H**
M8 × 20 screw (1)	100	**NSYS20M8H**

(1) Screw without captive washer.

Reference by unit. Order by multiples of 50 (Flat nuts) and 100 (Screws).

Mounting
Installation accessories

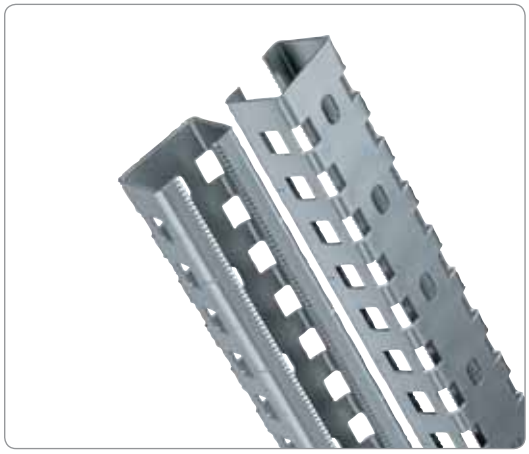
PB500483

For ranges
SF, SM, SFX, SMX,
SD, SDX, PLA

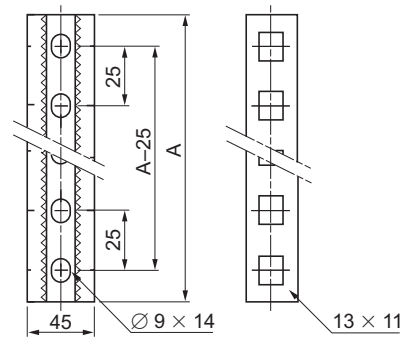

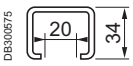

DB300575

Technical uprights

- Vertical uprights for fixing plates and rails.
- They can be fixed to the fixing brackets of the mounting plate or to the upright-fixing bracket (ref. **NSYMFB**).
- Adjustable height in steps of 2.5 mm (with quarter-turn nuts, ref. **NSYSNM6** or **NSYSNM8**) or 25 mm (with cage nuts, ref. **NSYCNM6** or **NSYCNM8**).
- Thickness: 2 mm.

Supply: 2 standard uprights.

Enclosure height	A	Reference
750	625	**NSYTVR7**
1000*	675	**NSYTVR8**
1000	875	**NSYTVR10**
1200	1075	**NSYTVR12**
1250	1125	**NSYTVR125**
1400	1275	**NSYTVR14**
1500	1375	**NSYTVR15**
1600	1475	**NSYTVR16**
1800	1675	**NSYTVR18**
2000	1875	**NSYTVR20**
2200	2075	**NSYTVR22**

* Control desk.

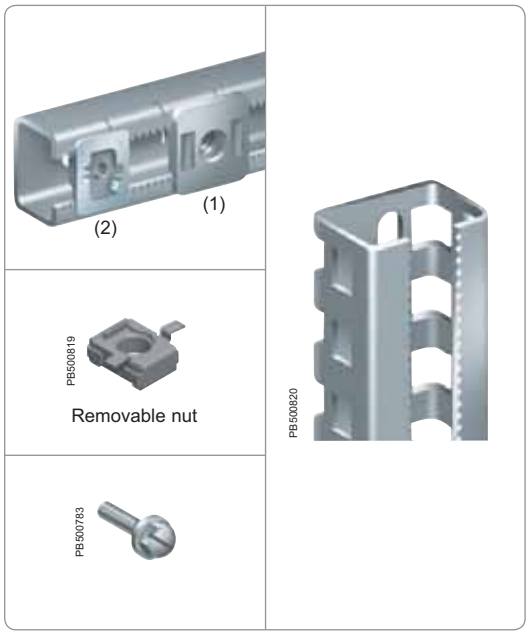

PB500818

PB500819

Removable nut

PB500783

PB500820

Nuts and screws for technical uprights

- Clip-on quarter-turn sliding nuts.
- Removable nuts to be installed in the 13 x 11 mm holes of the technical uprights. They also can be installed directly in the enclosure structure or in the cross rails.
- Hexagonal screw with washer.

Nuts and screws for technical vertical upright	Supply (units)	Reference
M6 quarter-turn sliding nut (1)	10	**NSYSNM6**
M8 quarter-turn sliding nut (1)	10	**NSYSNM8**
M6 quarter-turn serrated sliding nut (2)	10	**NSYSNSM6**
M8 quarter-turn serrated sliding nut (2)	10	**NSYSNSM8**
M6 renovable nut	50	**NSYCNM6**
M8 renovable nut	50	**NSYCNM8**
M6 × 12 screw	100	**NSYS12M6H**
M6 × 16 screw	100	**NSYS16M6H**
M6 × 18 screw	100	**NSYS18M6H**
M8 × 16 screw	100	**NSYS16M8H**
M8 × 20 screw	100	**NSYS20M8H**

Mounting
Installation accessories

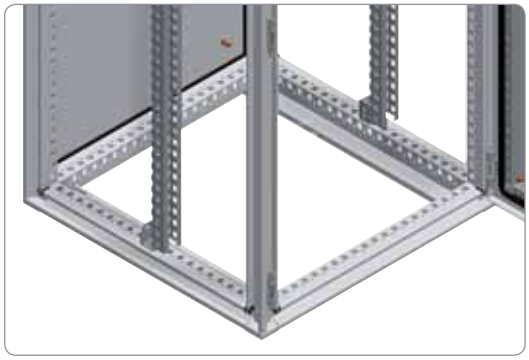

PB500821

[For ranges SF, SFX, SMX, SD, SDX]

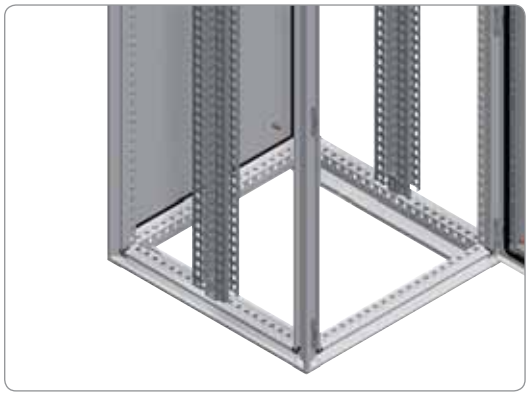

PB500822

Bracket for fixing uprights

- Brackets for fixing the uprights, standard or technical, at the same level as the structure, obtaining a greater working surface inside the enclosure.
- They allow two pairs of uprights to be fixed back to back, doubling the working surface.
- The brackets are fixed to the structure by means of M6 self-tapping screws.
- Adjustable depth with a pitch of 25 mm.
- Material: zinc-coated steel.

Supply: four brackets for fixing uprights and fixing elements.

Reference
NSYMFB

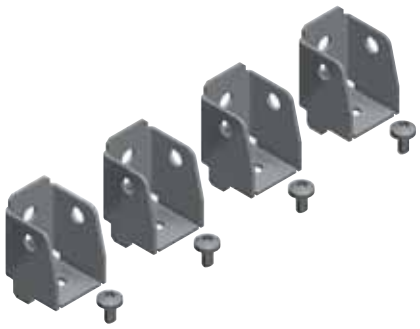

PB500823

Mounting accessories
Mounting plates

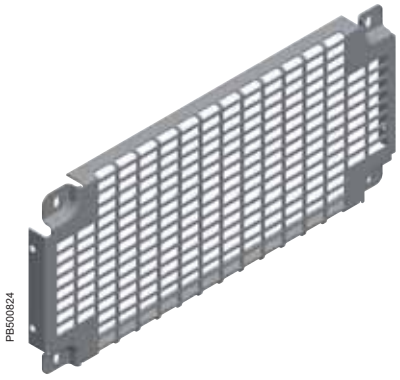

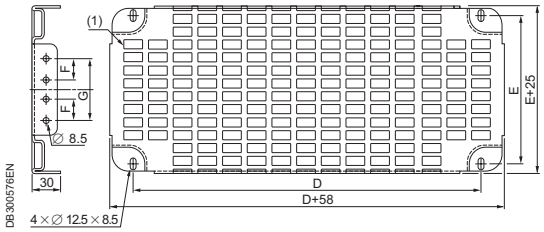

(1) Cut-outs 11 × 26 with a pitch of 15 × 30.

For ranges SF, SM, SFX, SMX

Perforated mounting plate “telequick”

- Allows the installation of switchgear without drilling or screwing.
- Plate designed for quick fixing of switchgear by means of clip-on nuts ref. **NSYKNM3** to **NSYKNM6**.
- Fixing options:

– Directly to the vertical uprights of the structure, by means of self-tapping screws (only Spacial SF).

– To the technical vertical uprights, by means of sliding nuts, page **7/25**; to standard uprights by means of flat nuts, page **7/23** or self-tapping screws, and to cross rails.

- Vertical continuity is guaranteed by the vertical installation of plates.
- The top plate must be fixed in the third hole, 80 mm from the top frame.
- Material: zinc-coated steel.

Supply: one perforated mounting plate and fixing elements for technical uprights and screws for fixing to the structure or cross rails.

Nominal dimensions (mm)	Plate height (mm)				Useful surface (Dm^2)	Reference
Width (B)	D	E	F	G		
600	450	200	–	100	11.4	**NSYSTMP2260**
	450	425	–	325	22.8	**NSYSTMP4560**
	450	575	125	475	30.4	**NSYSTMP6060**
	450	800	250	700	11.9	**NSYSTMP8260**
800	650	200	–	100	15.9	**NSYSTMP2280**
	650	425	–	325	31.8	**NSYSTMP4580**
	650	575	125	475	42.4	**NSYSTMP6080**
	650	800	250	700	58.4	**NSYSTMP8280**
1000	850	200	–	100	20.4	**NSYSTMP22100**
	850	425	–	325	40.8	**NSYSTMP45100**
	850	575	125	475	54.4	**NSYSTMP60100**
	850	800	250	700	74.9	**NSYSTMP82100**
1200	1050	200	–	100	24.9	**NSYSTMP22120**
	1050	425	–	325	49.9	**NSYSTMP45120**
	1050	575	125	475	66.5	**NSYSTMP60120**
	1050	800	250	700	91.5	**NSYSTMP82120**
1600	Order two 800-mm plates					

See also the accessories



Plastic cable support
ref. **NSYSPC**
page **7/123**



Lyre-shaped clamp for plate
ref. **NSYGCR**
page **7/124**

Mounting accessories
Mounting plates


PB500107

Clip-on nuts

- Clip-on nuts for Telequick mounting plate.
- Used to easily fix devises in the Telequick mounting plate with the possibility of changing the lay-out as much as needed.

Supply: 100 units.

Reference by unit. Order by multiples of 100 (100, 200, 300...).

Model	Reference
M3	**NSYKNM3**
M4	**NSYKNM4**
M5	**NSYKNM5**
M6	**NSYKNM6**

Examples of perforated mounting plate installation

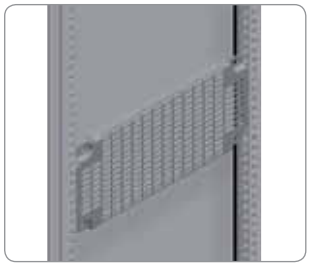
PB500825

(1) Perforated plate mounted on structure.


PB500826

(2) Perforated plate mounted on technical vertical uprights.

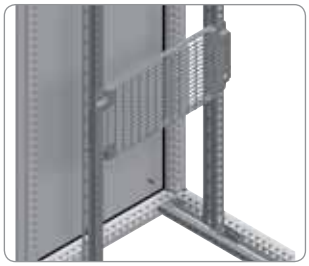
PB500827

(3) Perforated plate mounted on standard vertical uprights.


PB500828

(4) Perforated plate mounted on cross rails.

7

Mounting
Installation accessories


PB500829

Rail support bracket

- Bracket for fixing rails at an angle of 45°.
- **Spacial SF:** mounted on the structure and/or mounting plates.
- **Spacial SM:** mounted on the bottom mounting rail and/or mounting plates.
- Material: zinc-coated steel.

Supply: ten units and fixing elements.

Reference by unit. Order by multiples of 10 (10, 20, 30...).

Reference
NSYFB45

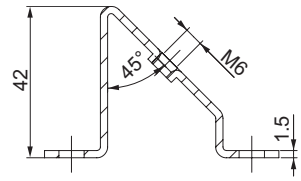

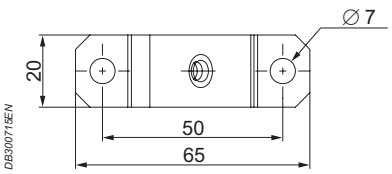

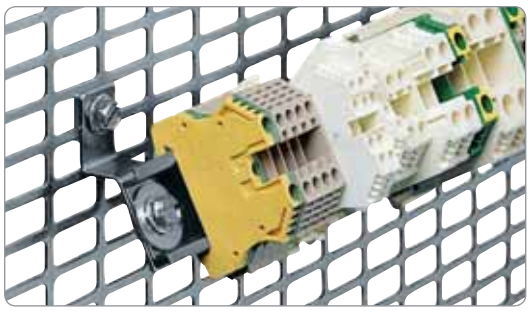
PB500830

Terminal-block support bracket

- Tilted to 45°.
- Material: treated steel.

Composition: 2 lugs and fixings

Reference
NSYEDCO

Mounting
Installation accessories

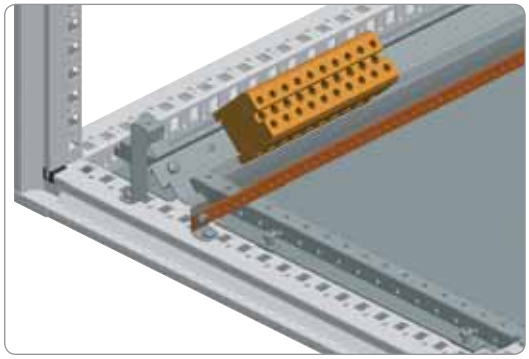
PB500831

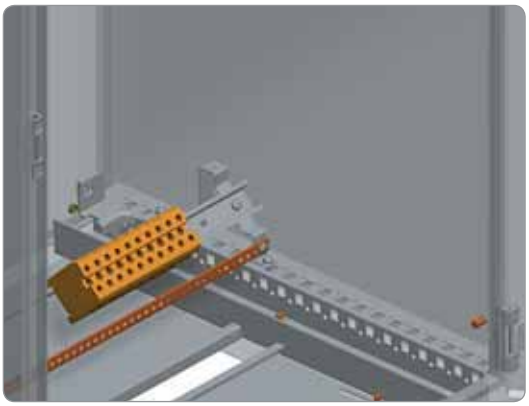
PB500832

Combined support bracket

- Allow the installation of a DIN rail and an earthing strip on different planes, to minimise the cable radiuses.
- **Spacial SF** installation: directly on the structure and/or using mounting plates.
- **Spacial SM** installation: on the bottom adjustment rails and/or on mounting plates.
- Material: zinc-coated steel.

Supply: ten combined support brackets and fixing elements.

Reference by unit. Order by multiples of 10 (10, 20, 30...).

Reference
NSYETF

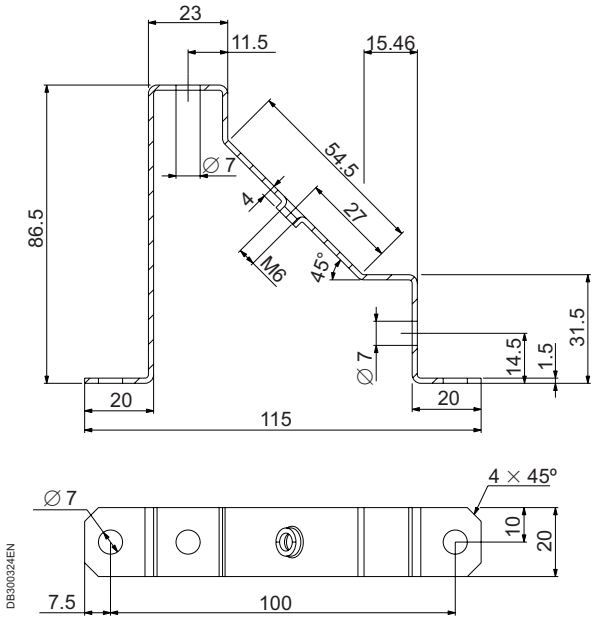

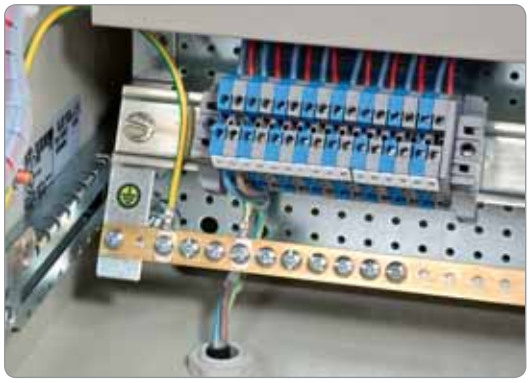
PB500833

Combined fixing lugs for the earthing strip

- They allow the mounting of an earth-collector rail at the bottom of the enclosure and a DIN rail.
- Tilted to 30°.
- Earthing strip, ref. **NSYECB1M153**. See page **7/141**.

Composition: 2 fixing lugs and fixing elements.

Reference
NSYEDCOC

Mounting

Combination examples

In the **Spacial SF**, **SM**, **SFX** and **SMX** enclosures, it is possible to create a fixing at any point of the inner volume, providing mounting planes with different widths, heights and depths.
In the case of the **Spacial SM**, it may be necessary to install vertical/horizontal adaptation profiles and 40-mm universal cross rails (1 row).

For the formation of structures inside the enclosure, it is possible to combine three types of cross rails:
– Universal cross rails of 40 (1 row), 65 (2 rows) and 90 mm (3 rows).
– Quick-fixing cross rails of 40 (1 row), 65 (2 rows) and 90 mm (3 rows).
– Light cross rails.
– Mounting plate sliding rails, see page **7/14**.


PB500465

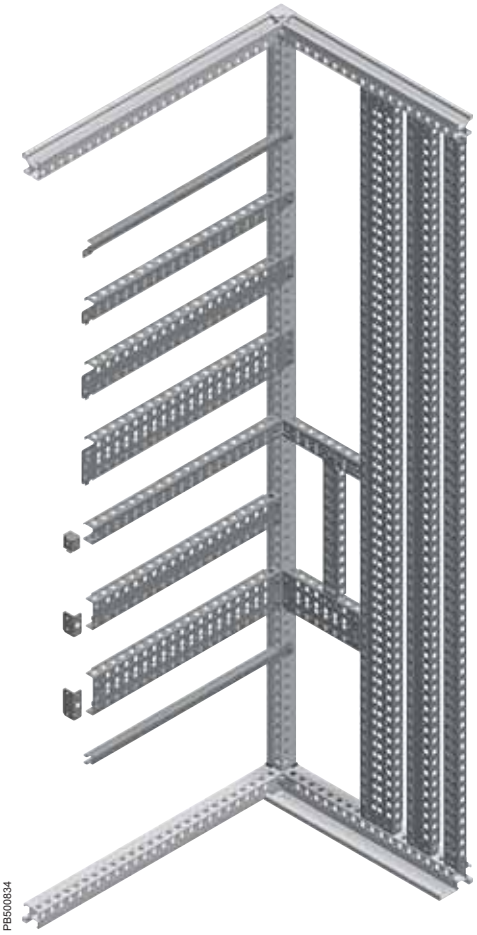
PB500834

Mounting

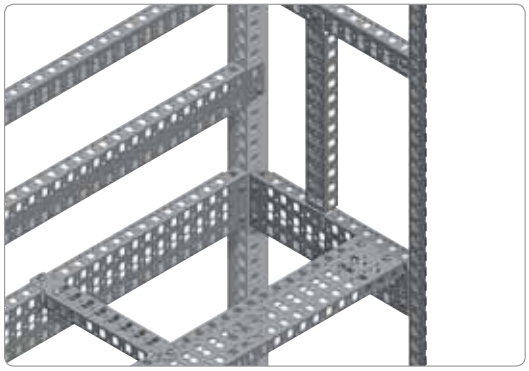
PB500486

Spacial SF and SFX: the cross rails can be fixed to the structure and among each other, offering multiple possibilities.

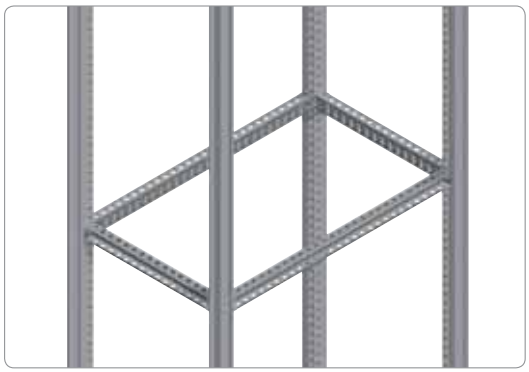
PB500835

The universal cross rails allow installations at the same level, around the entire perimeter of the enclosure.
To perform this type of installation in a **Spacial SM** enclosure, the vertical adaptation profile and the vertical 40-mm universal cross rail (1 row) are required, mounted in the back of the enclosure.

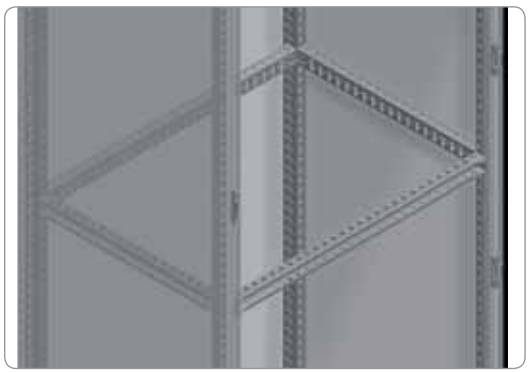
PB500836

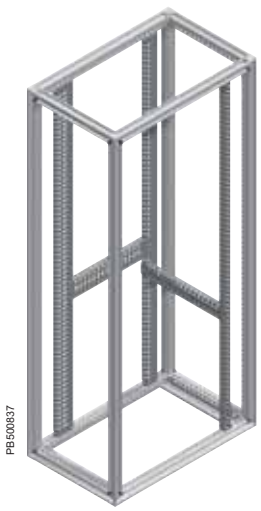
PB500837

Spacial SF: the universal cross rails can be installed in vertical position.

Mounting

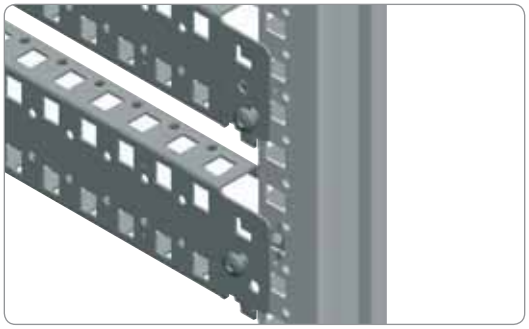

PB500838

The quick-fixing cross rails can be fixed directly to the structure, quickly and easily.

- **Spacial SF and SFX*:**
  – They clip onto the structure and are fixed by M6 self-tapping screws, or optionally with M6 caged nuts.
- **Spacial SM:**
  – Possibility of clipping onto the adaptation profile or another cross rail.
  – Fixing by means of M6 self-tapping screws.
  – Fixing by means of M6 caged nuts.

* In enclosures Spacial SFX is not possible to mount it in depth.

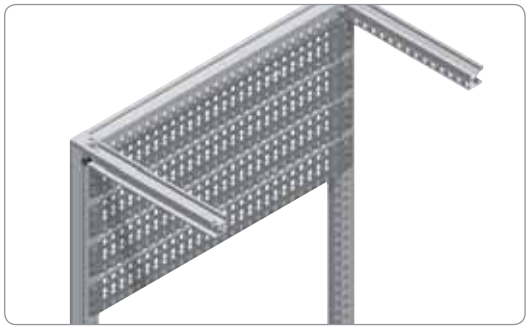

PB500839

The quick-fixing cross rails can be used as a support for equipment in the back of the enclosure or offset with a pitch of 25 mm, using two universal cross rails in vertical position.

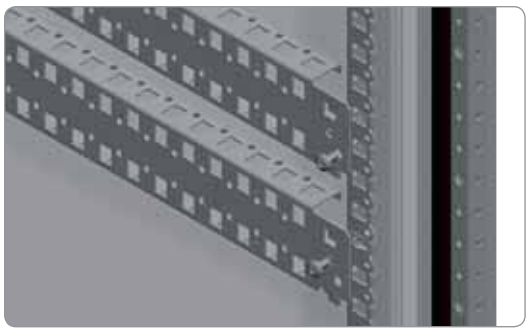

PB500840

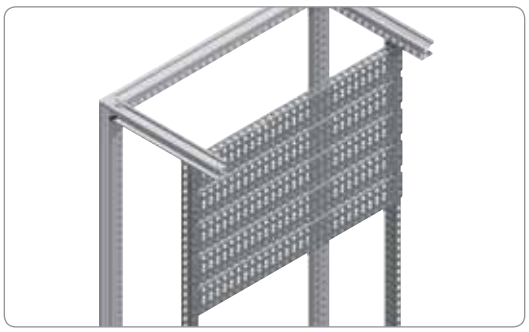

PB500841

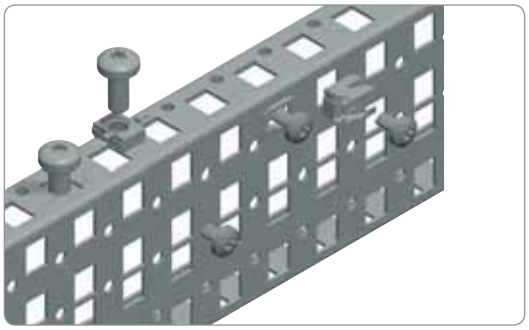

PB500842

The main fixing point to the quick-fixing cross rails is the 5.2 mm drill hole for M6 self-tapping screw, although they can also receive M6 and M8 caged nuts.

Mounting
Installation accessories

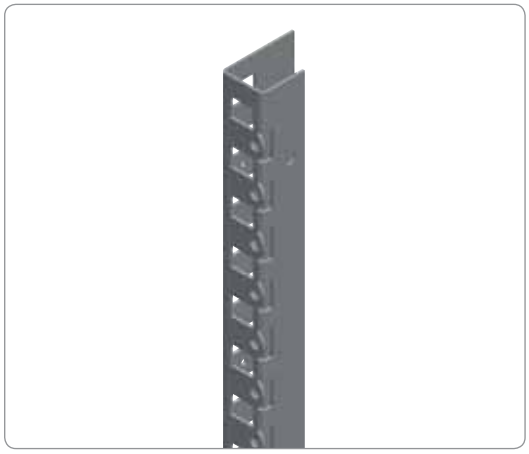
PB500478


PB500843

For ranges
SM

Vertical adaptation profiles

- The vertical adaptation profiles provide fixing points at the entrance to the enclosure.
- Fixing on the screws of the hinge and catches of the lock.
- Allows the depthwise fixing of cross rails, etc.
- Material: steel.
- Thickness: 1.5 mm.
- Finish: zinc-coated.

Supply: 2 vertical adaptation profiles and fixing screws.

Nominal height (mm) (A)	Reference
1200	**NSYSMVR12**
1400	**NSYSMVR14**
1600	**NSYSMVR16**
1800	**NSYSMVR18**
2000	**NSYSMVR20**

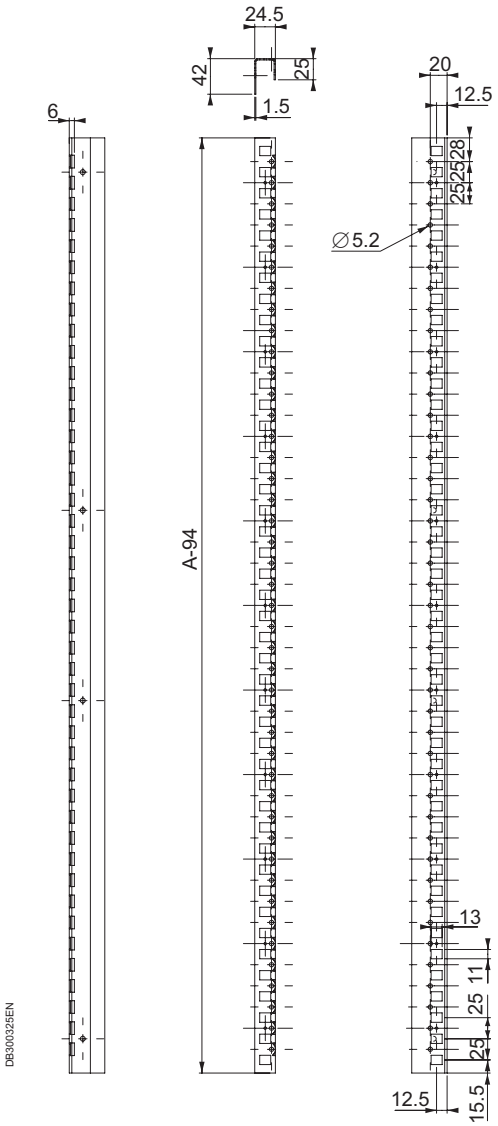

7

Mounting
Installation accessories

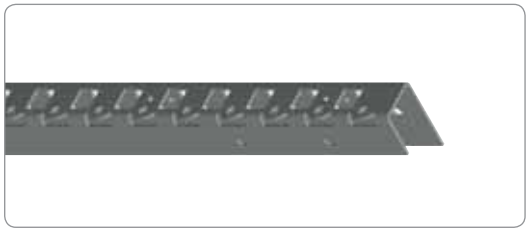
PB500844

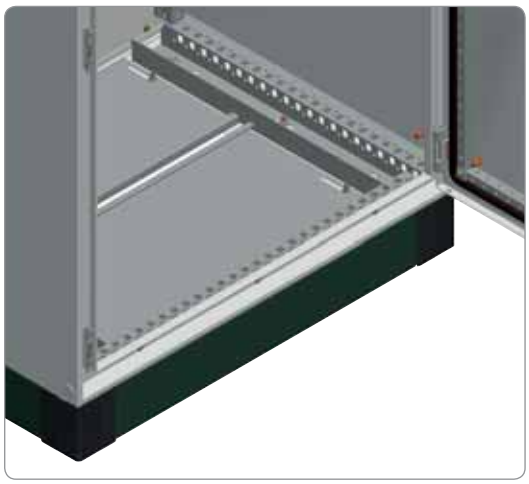
PB500845

[For ranges SM]

Horizontal adaptation profiles

- The horizontal adaptation profiles provide fixing points at the entrance to the enclosure.
- Material: steel.
- Thickness: 1.5 mm.
- Finish: zinc-coated.

Supply: 2 horizontal adaptation profiles and fixing screws.

Nominal width (mm) (B)	Reference
600	**NSYSMHR6**
800	**NSYSMHR8**
1000	**NSYSMHR10**
1200	**NSYSMHR12**
1600	**NSYSMHR16**

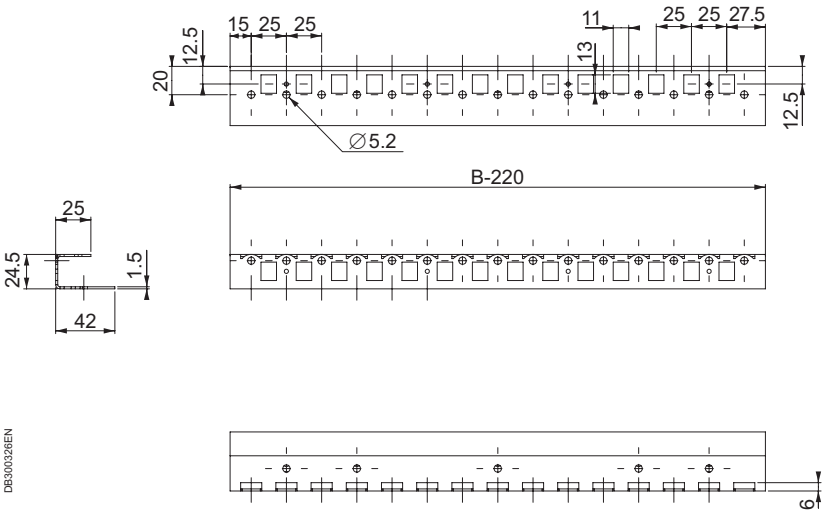

Mounting

For ranges SF, SM, SFX, SMX

Universal cross rails

- Various versions available, according to the width: 40 (1 row), 65 (2 rows) and 90 mm (3 rows), perforated with a pitch of 25 mm for the formation of structures inside the enclosure.
- They allow the performance of any type of assembly, as well as the adjustment of the depth of the various types of installation systems (partial plates, 19" racks, etc.).
- Material: zinc-coated steel.
- Thickness: 1.5 mm.

Supply: two universal cross rails, four supports for universal cross rails and fixing elements.

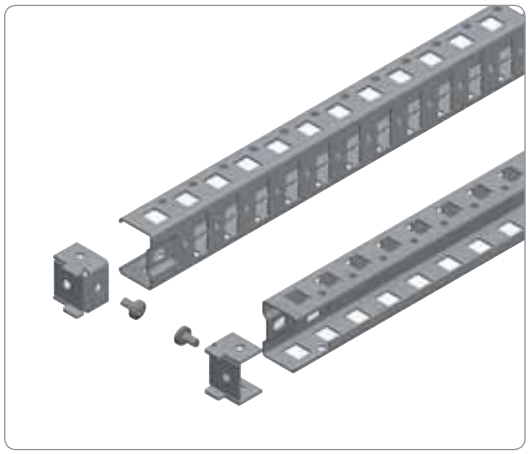

Nominal dimensions Height/Width/Depth (mm)	Maximum load (kg) by rail	Reference 40 mm (1 row)
300	70	**NSYSUCR4030**
400	60	**NSYSUCR4040**
500	60	**NSYSUCR4050**
600	50	**NSYSUCR4060**
800	40	**NSYSUCR4080**
1000	30	**NSYSUCR40100**
1200	20	**NSYSUCR40120**
1400	(1)	**NSYSUCR40140**
1600	(1)	**NSYSUCR40160**
1800	(1)	**NSYSUCR40180**
2000	(1)	**NSYSUCR40200**
2200	(1)	**NSYSUCR40220**

(1) For vertical assembly only.

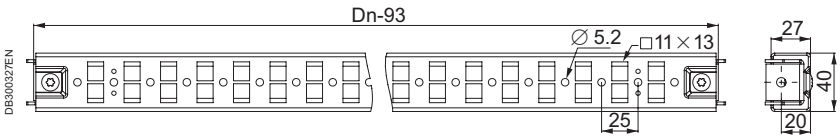

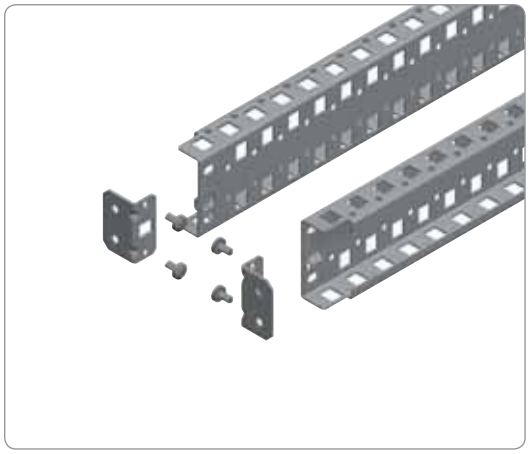

Nominal dimensions Height/Width/Depth (mm)	Maximum load (kg) by rail	Reference 65 mm (2 rows)
300	110	**NSYSUCR6530**
400	100	**NSYSUCR6540**
500	90	**NSYSUCR6550**
600	80	**NSYSUCR6560**
800	70	**NSYSUCR6580**
1000	50	**NSYSUCR65100**
1200	50	**NSYSUCR65120**
1400	(1)	**NSYSUCR65140**
1600	(1)	**NSYSUCR65160**
1800	(1)	**NSYSUCR65180**
2000	(1)	**NSYSUCR65200**
2200	(1)	**NSYSUCR65220**

(1) For vertical assembly only.

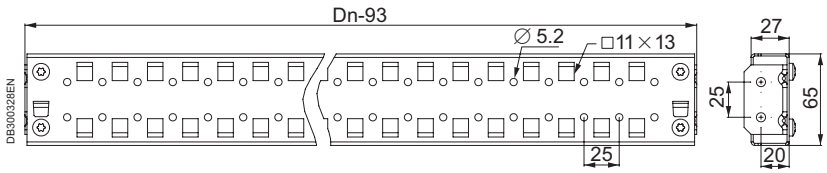

> Advantage:

The universal cross rails allow any type of installation to be performed.

Mounting

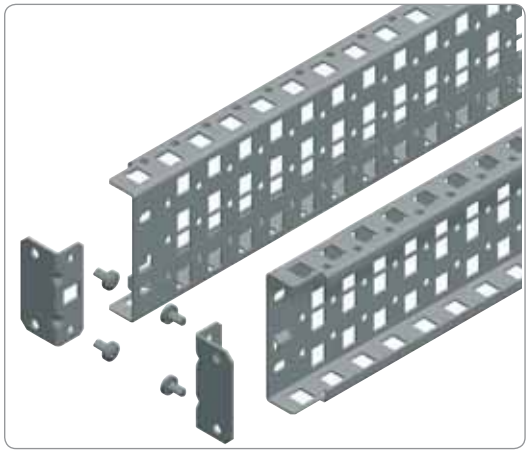
PB500848

Nominal dimensions Height/Width/Depth (mm)	Maximum load (kg) by rail	Reference 90 mm (3 rows)
300	130	**NSYSUCR9030**
400	120	**NSYSUCR9040**
500	120	**NSYSUCR9050**
600	110	**NSYSUCR9060**
800	100	**NSYSUCR9080**
1000	70	**NSYSUCR90100**
1200	70	**NSYSUCR90120**
1400	(1)	**NSYSUCR90140**
1600	(1)	**NSYSUCR90160**
1800	(1)	**NSYSUCR90180**
2000	(1)	**NSYSUCR90200**
2200	(1)	**NSYSUCR90220**

(1) For vertical assembly only.

For ranges SF, SM, SFX, SMX

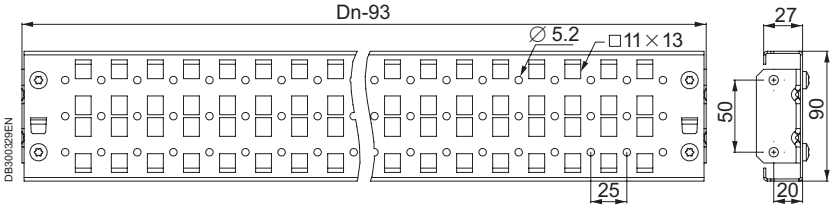

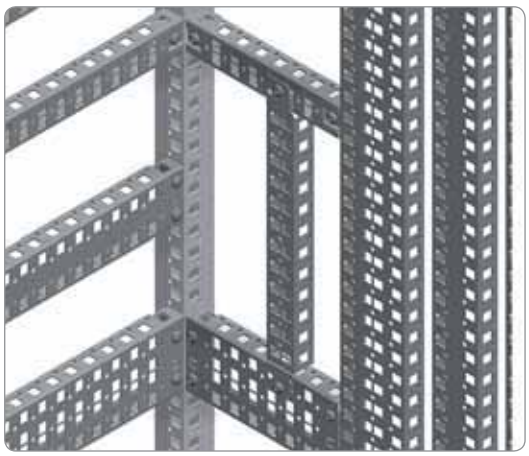
PB500849

Other dimensions

- Other dimensions of universal cross rails of 40 (1 row) and 90 mm (3 rows) for assembly in other positions, and between cross rails.
- Material: zinc-coated steel.
- Thickness: 1.5 mm.

Supply: two universal cross rails, four supports for universal cross rails and fixing elements.

Nominal dimensions Height/Width/Depth (mm)	Maximum load (kg) (1)	Reference 40 mm (1 row)	Maximum load (kg) by rail	Reference 90 mm (3 rows)
700	50	**NSYSUCR4070**	110	**NSYSUCR9070**
900	40	**NSYSUCR4090**	100	**NSYSUCR9090**
1100	30	**NSYSUCR40110**	70	**NSYSUCR90110**
1500	(1)	**NSYSUCR40150**	(1)	**NSYSUCR90150**

(1) Cross rails only for fixing cables.

Mounting

For ranges SF, SM, SFX, SMX

Quick-fixing cross rails

- There are 3 models, according to width: 40 mm (1 row), 65 mm (2 rows) and 90 mm (3 rows), perforated with a pitch of 25 mm (∅ 5.2 mm).
- Adjustable with a pitch of 25 mm.
- **Spacial SF:** they are fixed directly to the structure, quickly and safely. Clip-on plus screwing.
- **Spacial SM:** cross rails for depthwise fixing by means of adaptation profiles and 40 mm universal cross rails (1 row), or between cross rails in any other position.
- Material: zinc-coated steel.

Supply: two quick-fixing cross rails and fixing elements.

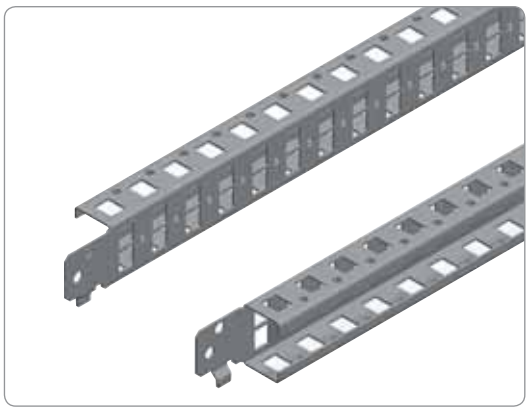

PB500850

Nominal dimensions Height/Width/Depth	Maximum load (kg) by rail	Reference 40 mm (1 row)
400	60	**NSYSQCR4040**
500	60	**NSYSQCR4050**
600	50	**NSYSQCR4060**
800	40	**NSYSQCR4080**
1000	30	**NSYSQCR40100**
1200	20	**NSYSQCR40120**

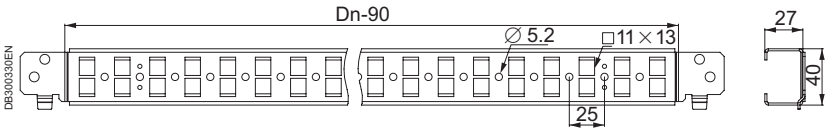

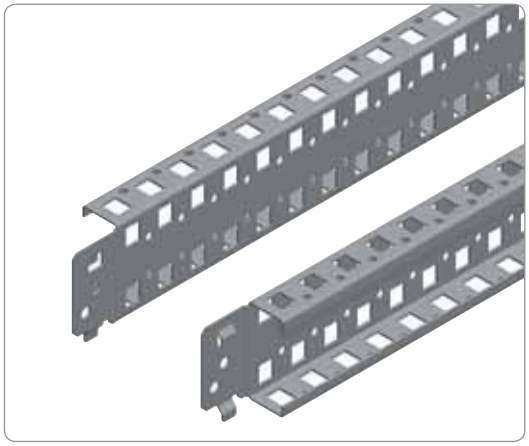

PB500851

Nominal dimensions Height/Width/Depth	Maximum load (kg) by rail	Reference 65 mm (2 rows)
400	100	**NSYSQCR6540**
500	90	**NSYSQCR6550**
600	80	**NSYSQCR6560**
800	70	**NSYSQCR6580**
1000	50	**NSYSQCR65100**
1200	50	**NSYSQCR65120**

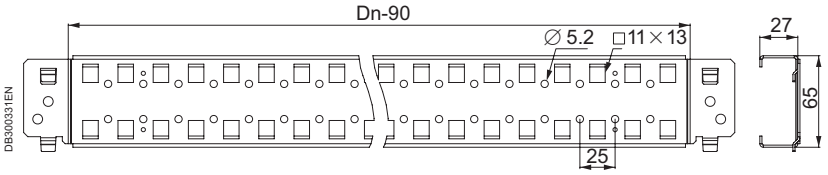

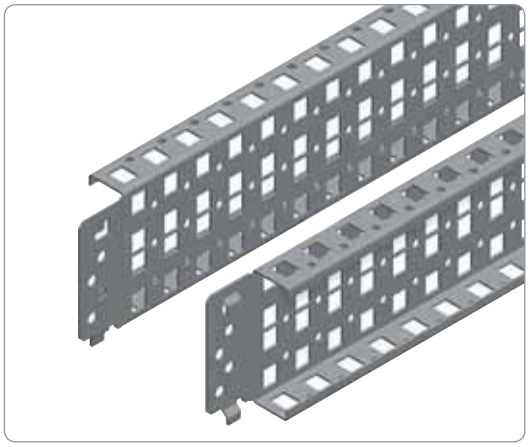

PB500852

Nominal dimensions Height/Width/Depth	Maximum load (kg) by rail	Reference 90 mm (3 rows)
400	120	**NSYSQCR9040**
500	120	**NSYSQCR9050**
600	110	**NSYSQCR9060**
800	100	**NSYSQCR9080**
1000	70	**NSYSQCR90100**
1200	70	**NSYSQCR90120**

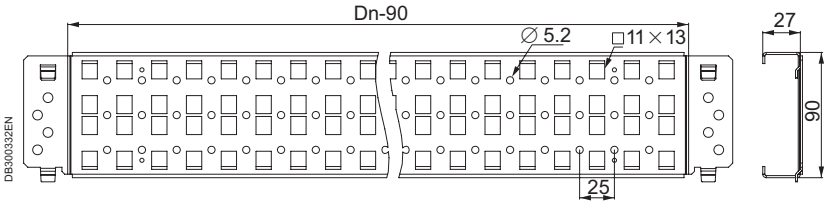

7

Mounting

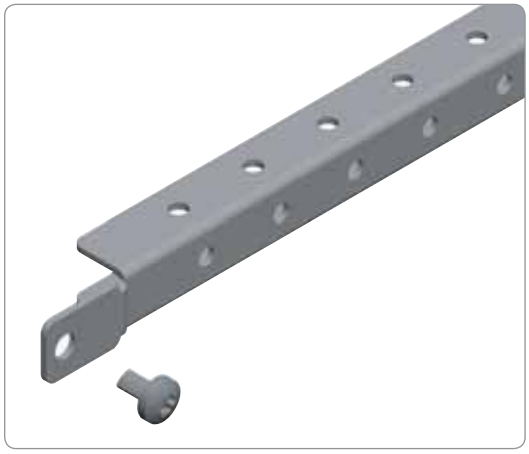

PB500853

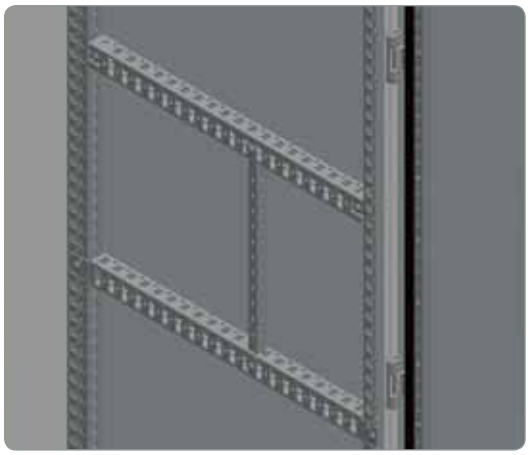

PB500854

Light cross rails

- **Spacial SF and SFX:** direct fixing to the structure or between cross rails.
- **Spacial SM:** fixing by means of adaptation profiles and 40 mm universal cross rails (1 row), or between cross rails in any other position.
- Adjustable with a pitch of 25 mm.
- The light cross rails are equipped with a row of drill holes with a diameter of 5.2 mm and a pitch of 25 mm, which allows fixing with an M6 self-tapping screw, ref. **NSYST30M6S**.
- Material: zinc-coated steel.

Supply: two light cross rails and fixing elements.

Nominal dimensions	Reference
Width/Depth	
400	**NSYSLCR40**
500	**NSYSLCR50**
600	**NSYSLCR60**
800	**NSYSLCR80**

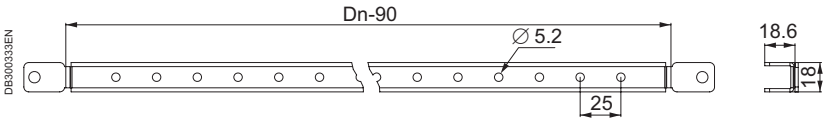

For ranges SF, SFX, SM



PB500855

Rails for heavy loads

- They can be mounted with a cable-gland plate or with a previously mounted mounting plate.
- Laterally adjustable with a pitch of 25 mm.
- Elongated holes, for adjusting the centre-to-centre distance of the switchgear.
- Material: galvanised steel.
- Thickness: 4 mm.

Supply: 2 rails for heavy loads and fixing elements.

Nominal dimensions (mm)	Maximum load (kg)	Reference
Depth		
400	575	**NSYHLCR40**
500	525	**NSYHLCR50**
600	500	**NSYHLCR60**
800	475	**NSYHLCR80**

For ranges SF

Mounting

Fixing elements

- **Caged nuts:** they are installed in the rectangular cut-outs of the structure and the cross rails.
- **Removable nuts:** they are installed in the rectangular cut-outs of the structure and the cross rails, easy to extract and reuse.
- **Screw with washer:** they make assembly easier in difficult-access locations.
- **Metric Torx screw:** to fix on the caged and/or removable nuts.
- **Torx self-tapping screw:** to fix on the structure or on the cross rails.

	Fixing element	Supply (units)	Reference
 PB500819	M6 removable nut	50	**NSYCNM6**
	M8 removable nut	50	**NSYCNM8**
 PB500783	M6 × 12 mm	100	**NSYS12M6H**
	M6 × 16 mm	100	**NSYS16M6H**
	M6 × 18 mm	100	**NSYS18M6H**
	M8 × 16 mm	100	**NSYS16M8H**
	M8 × 20 mm	100	**NSYS20M8H**
 PB500856	Torx T30 M6 × 16 mm screw (1)	100	**NSYST30M6**
	Torx T40 M8 × 16 mm screw (1)	100	**NSYST40M8**
 PB500857	Torx T30 M6 × 12 mm self-tapping screw (1)	100	**NSYST30M6S**

(1) Screw without washer.

Reference by unit. Order by multiples of 50 (nuts) or 100 (screws).

7

Mounting
Installation examples

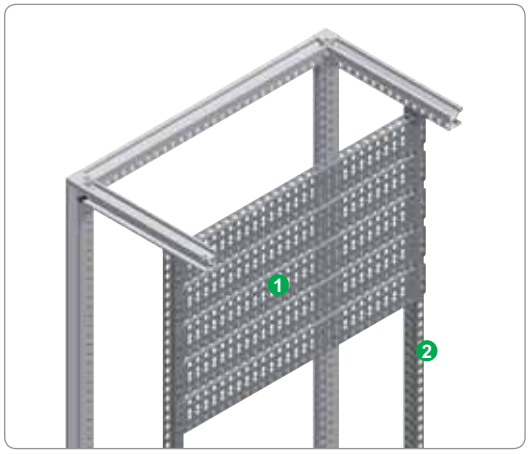

PB500841

1 90-mm quick cross rails (3 rows), page **7/37**.
2 40-mm universal cross rails (1 row), page **7/35**.

Modular universal chassis

Alternative of assembly with cross rails and accessories (enclosure width 600 mm)

- The 40-mm universal cross rails (1 row) used as depth-adjustable uprights with a pitch of 25 mm allow the installation of a multitude of supports for installing switchgear, allowing their height to be adjusted with a pitch of 25 mm.

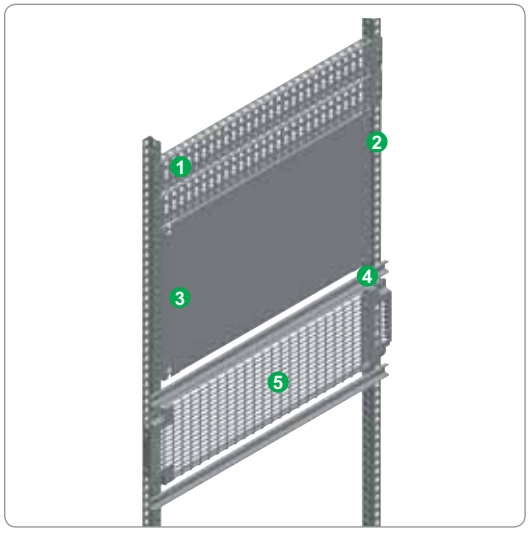

PB500858

- The modular universal chassis system allows modular and non-modular elements to be installed easily on the same plane, using DIN rails, partial plates and 90-mm cross rails (3 rows) used as pre-perforated plates.

1 90-mm quick-fixing cross rails (3 rows), page **7/37**.
2 40-mm universal cross rails (1 row), page **7/35**.
3 Partial mounting plate, page **7/21**.
4 Symmetric DIN rail, page **7/50**.
5 "Telequick" perforated mounting plate, page **7/4**.

Mounting
Installation examples

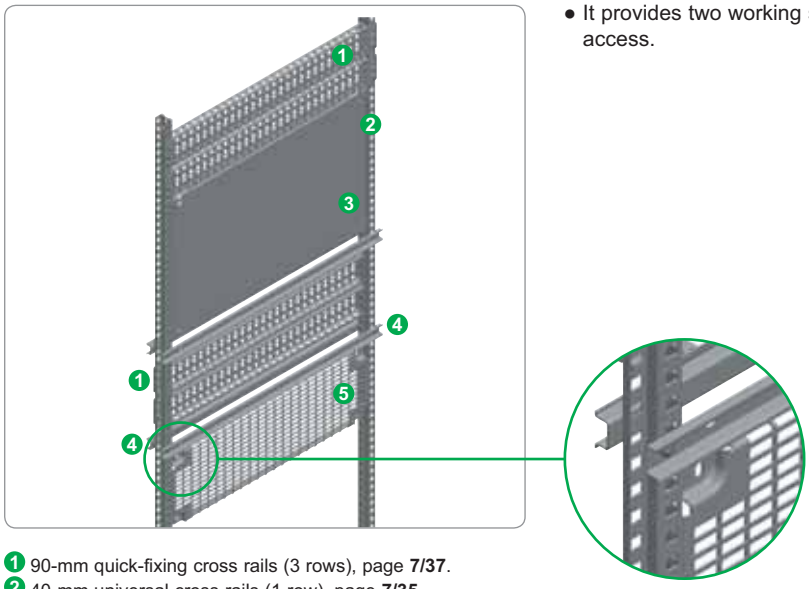

PB500859

- It provides two working surfaces, front and rear, in enclosures with front and rear access.

1. 90-mm quick-fixing cross rails (3 rows), page **7/37**.
2. 40-mm universal cross rails (1 row), page **7/35**.
3. Partial mounting plate, page **7/21**.
4. Symmetric DIN rail, page **7/50**.
5. "Telequick" perforated mounting plate, page **7/4**.

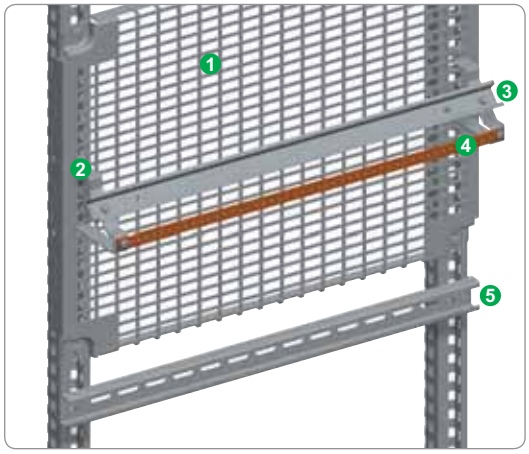

PB500479

Alternative of assembly with mounting uprights and accessories (enclosure width 600 mm)

- The installation of uprights on the mounting plate brackets allows the creation of chassis with perforated rails and plates, adjustable with a pitch of 2.5 mm, using quarter-turn nuts.

1. Perforated mounting plate "telequick", page **7/4**.
2. Combined support brackets for earthing bar, page **7/140**.
3. Symmetric DIN rail, page **7/50**.
4. Earthing bar, page **7/140**.
5. Symmetric C-shaped rail, page **7/56**.

Mounting
Equipment support accessories



PB500855

For ranges SF

Rails for heavy loads

- They can be mounted with a cable-gland plate or with a previously mounted mounting plate.
- Laterally adjustable with a pitch of 25 mm.
- Elongated holes, for adjusting the centre-to-centre distance of the switchgear.
- Material: galvanised steel.
- Thickness: 4 mm.

Supply: 2 rails for heavy loads and fixing elements.

Nominal dimensions (mm)	Maximum load (kg)	Reference
Depth		
400	575	**NSYHLCR40**
500	525	**NSYHLCR50**
600	500	**NSYHLCR60**
800	475	**NSYHLCR80**

Mounting
Equipment support accessories


PB500523

Tray installed on the structure.

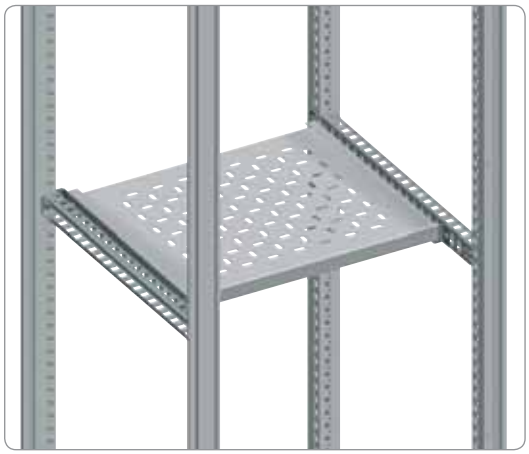
PB500668

Tray installed on cross rails.

> Advantage:
Withstands loads of up to 150 kg.

Fixed tray

- Options for fixing the tray to the enclosure:
– If the tray has the same dimensions as the enclosure:
  - **Spacial SF:** direct fixing to the structure.
  - **Spacial SFX:** instalation possible only with universal cross rails, see on page **7/35**.
  - **Spacial SM:** fixing by means of adaptation profiles and 40-mm universal cross rails (1 row) in vertical position.
– If the tray is smaller than the dimensions of the enclosure: fixing on depth cross rails.
  - Depth-adjustable tray with a pitch of 25 mm.
- Provided with cut-outs for improving air circulation inside.
- Material: steel.
- Finish: painted with epoxy-polyester resin, RAL-7035 grey.
- Acceptable load: 150 kg, evenly distributed.
- Tray height: 30 mm.

Supply: one fixed tray and fixing elements.

Nominal dimensions (mm)		Tray Dimensions (mm)	Reference
Width	Depth		
600	400	482 × 290 × 30	**NSYFXT6040**
	500	482 × 390 × 30	**NSYFXT6050**
	600	482 × 490 × 30	**NSYFXT6060**
800	400	682 × 290 × 30	**NSYFXT8040**
	500	682 × 390 × 30	**NSYFXT8050**
	600	682 × 490 × 30	**NSYFXT8060**

Mounting
Equipment support accessories


PB500669

Telescopic rails fixed to the structure.


PB500670

Telescopic rails fixed to cross rails.

Telescopic rails

- **Spacial SF:** installation directly on the structure of the enclosure or on universal cross rails.
- **Spacial SFX:** Instalation possible only with universal cross rails, see on page **7/35**.
- **Spacial SM:** installation by means of adaptation profiles and 40-mm universal cross rails (1 row) in vertical position, or on horizontal universal cross rails.
- The installation of a telescopic tray consists of the following:

– 1 fixed tray.
– 2 telescopic rails.

- End-of-travel stop of the rails in open and closed position.
- Material: zinc-coated steel.
- Acceptable load: 50 kg evenly distributed.

Supply: two telescopic rails and fixing elements.

Nominal dimensions (mm)	Reference
Depth	
400	**NSYTTG40**
500	**NSYTTG50**
600	**NSYTTG60**

7

Mounting
Equipment support accessories

Tray cross rails

- The cross rails allow the installation of fixed trays and telescopic rails. Quick and universal cross rails, see page **7/35**.

Nominal dimensions (mm)	Universal cross rail reference	Quick-fixing cross rail reference
Depth	**40 mm (1 row)**	**40 mm (1 row)**
400	**NSYSUCR4040**	**NSYSQCR4040**
500	**NSYSUCR4050**	**NSYSQCR4050**
600	**NSYSUCR4060**	**NSYSQCR4060**
800	**NSYSUCR4080**	**NSYSQCR4080**

PB500671



Handle for telescopic trays

- Handle designed for easy extraction of the sliding trays.
- Material: polyamide 6 (black).

Supply: two units and fixing elements.

Reference
NSY1TH

PB500672



7

Mounting
Equipment support accessories

For ranges SF

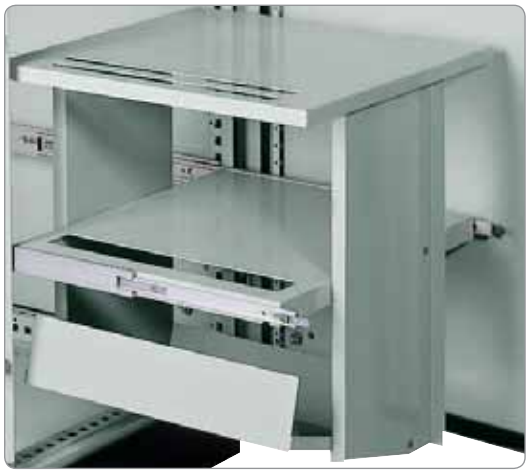

PB500673

Printer support

- Support for placing an A4 printer, with area reserved for paper.
- It is fixed directly to the structure of the enclosure, with a depth of 600 mm. For a depth of 800 mm, it can be installed with universal or quick 40-mm (1 row) cross rails (ref. **NSYSUCR4080** or **NSYSQCR4080**).
- Material: steel.
- Finish: painted RAL-7035 grey.

Supply: printer support and fixing elements.

Reference
NSYPSA4

For ranges SF

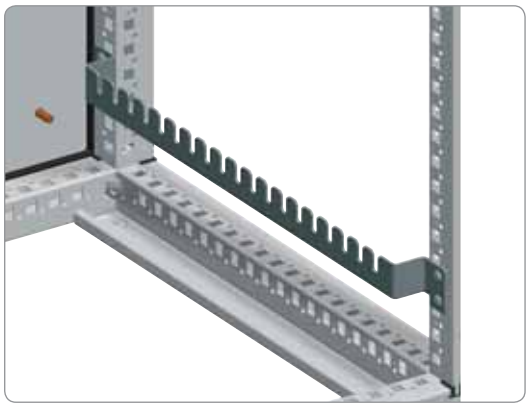

PB500861

Cross rail for Lütze chassis

- Cross rail for fixing and adjusting the depth of the Lütze chassis.
- Material: galvanised steel.
- Thickness: 2.5 mm.

Supply: 6 cross rails for Lütze chassis and fixing elements.

Nominal dimensions (mm) Depth (C)	Reference
400	**NSYLCR40**
500	**NSYLCR50**
600	**NSYLCR60**

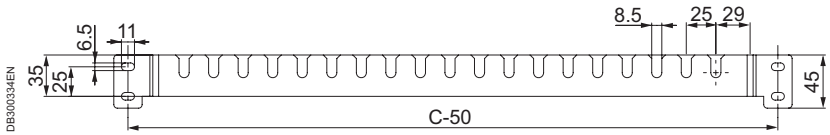

DB300334EN

Mounting
Equipment support accessories

For ranges SF


PB500862

Support for Lütze chassis

- Support for installing Lütze chassis in the back of the enclosure.
- Material: galvanised steel.
- Thickness: 2.5 mm.

Supply: 6 supports and fixing elements.

Reference
NSYLSUP

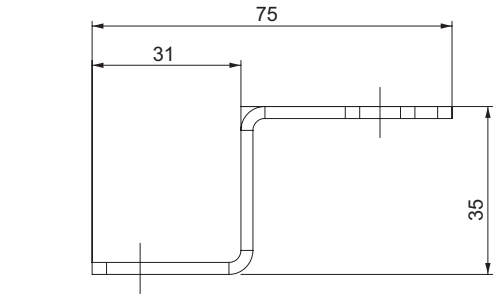

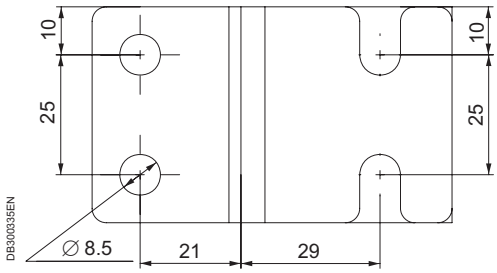

7

Mounting
19" Chassis

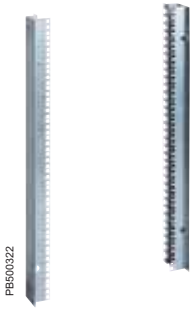

For ranges S3D, CRN, S3X

19" fixed chassis for wall mounting enclosure

- 19" fixed chassis comprising 2 19" uprights with fixing.
- Matérial: galvanized steel, thickness 20/10 mm.
- Maximum load: 3 kg per unit.
- Adjustable in depth by fixing on the step slides in accessories.

Enclosure (mm)		Unit number	Reference
Height	Width		
400	600	8	**NSYVDM8UF**
600	600	12	**NSYVDM12UF**
800	600	17	**NSYVDM17UF**
1000	600	21	**NSYVDM21UF**



For ranges S3D, CRN, S3X

19" swing chassis for wall mounting enclosure

- 19" swing chassis opening to 120° with closure by 3 mm double bar insert.
- Material: steel, textured epoxy-polyester powder paint colour grey RAL 7035.
- Maximum load: 3 kg per unit.

Enclosure (mm)		Unit number	Reference
Height	Width		
400	600	7	**NSYVDM7UP**
600	600	11	**NSYVDM11UP**
800	600	16	**NSYVDM16UP**
1000	600	20	**NSYVDM20UP**
1000	800	20	**NSYVDM20U8P**
1200	800	25	**NSYVDM25U8P**



Fixings for 19" rack

- They allow 19" accessories to be mounted.
- Caged nut compatible with 8.5 × 8.5 mm and 9.5 × 9.5 mm holes.

Batch of	Name	Reference
30	M6 screws + washers + nuts	**NSYGFR95M63**
50	M6 × 16 screws and washers	**NSYGFR166P**
100	M6 caged nuts	**NSYCN9M625**
50	M6 screws + washers + nuts	**NSYGFR95M65**
50	M5 screws + washers + nuts	**NSYGFR95M55**

Accessories



Mounting rails 7/50

Symmetric DIN rails 7/50

Asymmetric DIN rails 7/53

Double profile DIN rails 7/55

Symmetric C-shaped rails 7/56

Serrated C-shaped rails 7/57

U/L shaped rails 7/58

Connectors 7/59

Spacers 7/64

Nuts and screws 7/67

7

Mounting
Rails


PB500222

For ranges SF, SM, SFX, SMX, SD

Symmetric DIN rails

Symmetric DIN rails for the metal enclosure range

- Fixed to the standard or technical uprights, not included in the supply, or directly to the structure.
- Ensure horizontal continuity in case of enclosure assembly.
- Rail type:

– Type A: 35 × 15 mm, thickness 1.5 mm.

- Material: zinc-coated steel.

Supply: 20 rails and fixings for direct assembling to the structure.

References per unit. Please place orders in multiples of 20 units (20, 40, etc.).

Dimensions (mm) (B)	Rail length (mm) (B-12)	Reference
600	588	**NSYSDR60**
800	788	**NSYSDR80**
1000	988	**NSYSDR100**
1200	1188	**NSYSDR120**

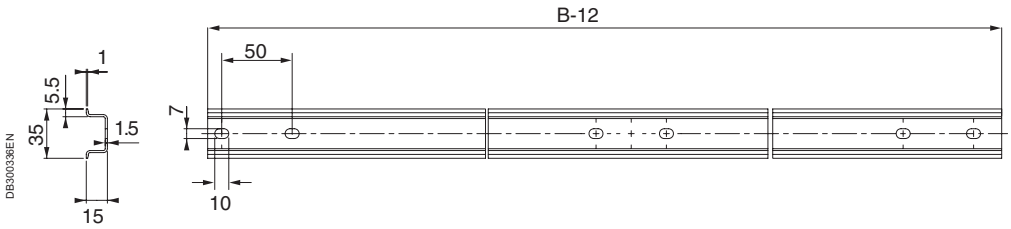

See also the accessories


PB500863
Nuts and fixings page **7/67**


PB500482
Uprights page **7/23**

Mounting
Rails

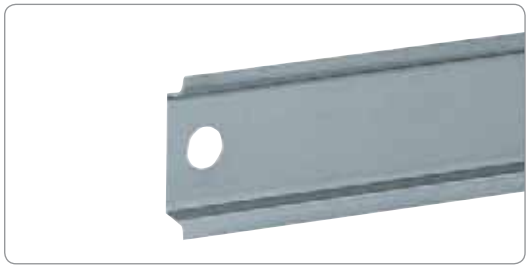
PB500773

For ranges
S3D, S3X, PLM

Symmetric DIN rail for the Wall-Mounting range

- Fixing to mounting plates or another fixing elements, uprights not included in the supply.
- 2 types:
– Type A: 35 × 15 mm, thickness 1.5 mm.
– Type B: 35 × 7,5 mm, thickness 1 mm.
- Material: zinc-coated steel.

Supply: 20 rails and fixings for direct assembling to the structure.

References by unit. Order by multiples of 20 units (20, 40, etc.).

Dimensions (mm)	Rail type	Rail length (B) (mm)	Reference
300	B	250	**NSYSDR30B**
400	B	350	**NSYSDR40B**
500	A	450	**NSYSDR50A**
600	A	550	**NSYSDR60A**
800	A	750	**NSYSDR80A**
1000	A	950	**NSYSDR100A**



Type A

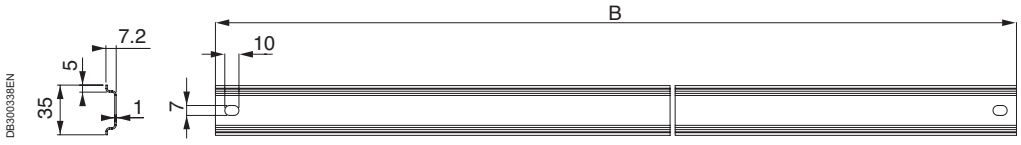

Type B

See also the accessories


PB500863
Nuts and fixings
page **7/67**

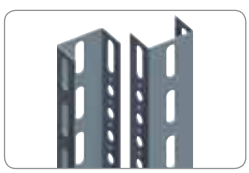
PB500482
Uprights
page **7/23**

Mounting
Rails


PB500864

Symmetric DIN rails, 2000 mm version

- Material: galvanised steel.

Supply: 20 rails with a length of 2 m.

References by unit. Order by multiples of 20 units (20, 40, etc.).

Length of the rail (mm)	Perforations	Rail type	Reference
2000	Not perforated	A	**NSYSDR200**
2000	Not perforated	B	**NSYSDR200B**
2000	Perforated	A	**NSYSDR200D**
2000	Perforated	B	**NSYSDR200BD**

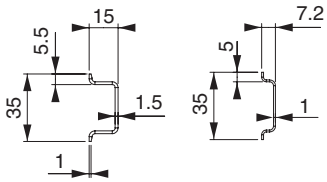

Type A Type B

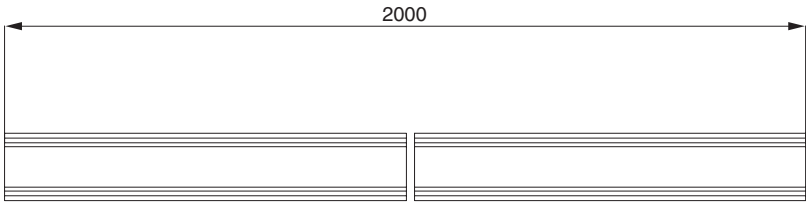

DB300337EN


Type A Type B

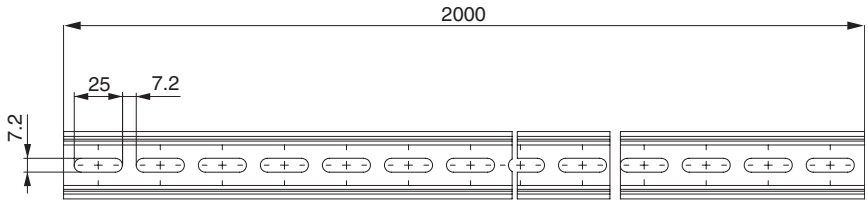

7

See also the accessories


PB500863

Nuts and fixings page **7/67**

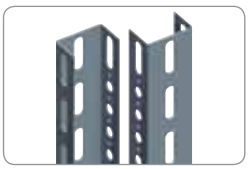
PB500482

Uprights page **7/23**

Mounting
Rails


PB500865

For ranges SF, SM, SFX, SMX, SD

Asymmetric DIN rails

Asymmetric DIN rails for the Floor-Standing range

- Fixed to the standard or technical uprights, not included in the supply, or directly to the structure.
- Ensure horizontal continuity in the case of enclosure assembly.
- Thickness: 1.5 mm.
- Material: zinc-coated steel.

Supply: 20 rails and fixings for direct fixing to the structure.

References by unit. Order by multiples 20 units (20, 40, etc.).

Dimensions (mm) (B)	Rail length (mm) (B-12)	Reference
600	588	**NSYADR60**
800	788	**NSYADR80**
1000	988	**NSYADR100**
1200	1188	**NSYADR120**

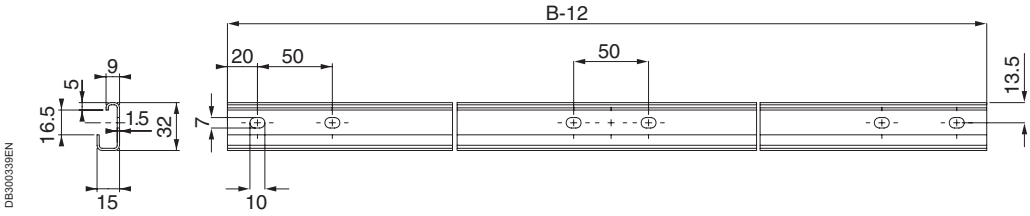

NSYADR60

7

See also the accessories


PB500866

Nuts and fixings page **7/67**

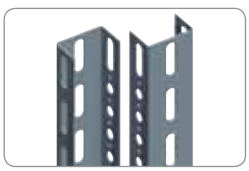
PB500482

Uprights page **7/23**

Mounting
Rails


PB500867

Asymmetric DIN rails, 2000 mm version

- Material: galvanised steel.

Supply: 20 rails with a length of 2 m.

References by unit. Order by multiples of 20 units (20, 40, etc.).

Length (mm)	Perforations	Reference
2000	Not perforated	**NSYADR200**
2000	Perforated	**NSYADR200D**

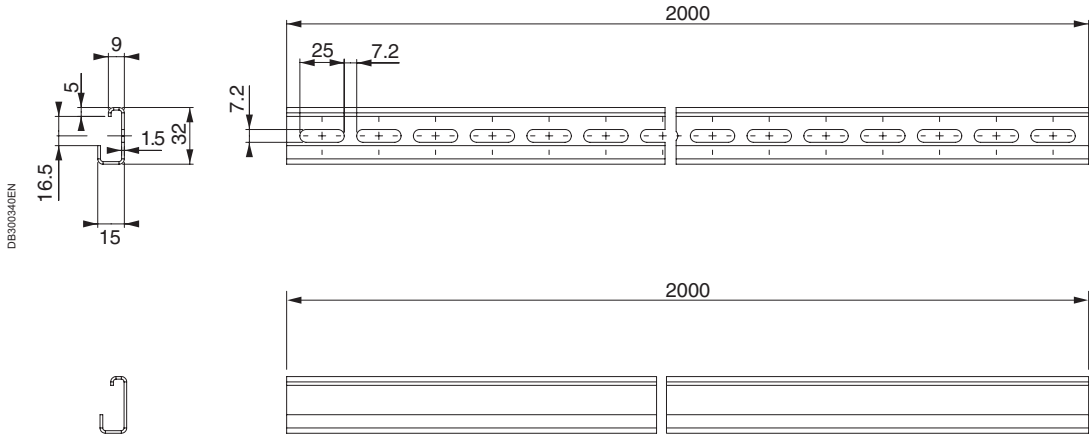

DB300340EN

7

See also the accessories


PB500866

Nuts and fixings page **7/67**

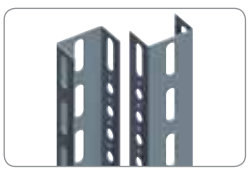
PB500482

Uprights page **7/23**

Mounting
Rails



PB500868

For ranges SF, SM, SFX, SMX, SD

Double-profile DIN rails

- They combine the advantages of symmetric and asymmetric rails.
- They are fixed to the standard or technical uprights (see page **7/23**) or directly to the structure.
- Quick installation of terminals according to standard DIN 46277/1.
- Thickness: 1.5 mm.
- Material: zinc-coated steel.

Supply: 20 rails and fixings for direct assembling to the structure.

References by unit. Order by multiples of 20 units (20, 40, etc.).

Dimensions (mm) (B)	Rail length (mm) (B-12)	Reference
600	588	**NSYDPR60**
800	788	**NSYDPR80**
1000	988	**NSYDPR100**
1200	1188	**NSYDPR120**

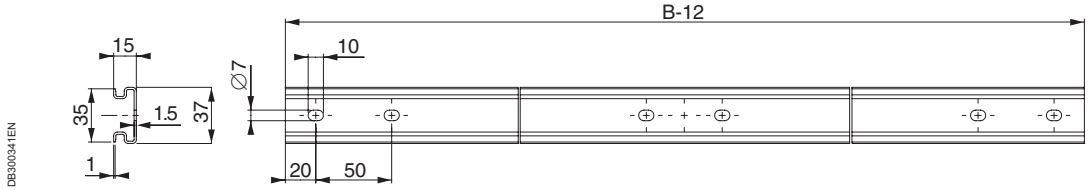

DB300341EN



PB500869

Double-profile DIN rails, 2000 mm version

- Thickness: 1.5 mm.
- Material: galvanised steel.

Supply: 20 rails with a length of 2 m.

References by unit. Order by multiples of 20 units (20, 40, etc.).

Length (mm)	Perforations	Reference
2000	Not perforated	**NSYDPR200**
2000	Perforated	**NSYDPR200D**

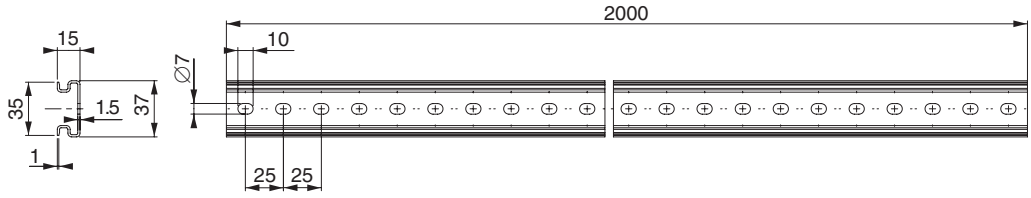

DB300341EN



7

Mounting
Rails


PB500870

Symmetric C-shaped rails

- Rails for supporting and fixing switchgear on panels and enclosures, formation of chassis, racks and panel reinforcements.
- They are fixed to the structure and to one another by means of fixing elements.
- Material: galvanised steel.

References by unit. Order by multiples of the units specified in the supply.

Rail type	A (mm)	B (mm)	C (mm)	D (mm)	E (mm)	F (mm)	G (mm)	H (mm)	Supply	Reference
C20 (1)	21	11	10	1.5	5.5	-	-	-	20	**NSYCN20**
C40 (1)	40	20	24	1.5	8	-	-	-	20	**NSYCN40**
C60 (1)	60	30	36	2	12	-	-	-	10	**NSYCN60**
C20	21	11	10	1.5	5.5	5	6.2	15	20	**NSYCNT20**
C40	40	20	24	1.5	8	10	8.5	30	20	**NSYCNT40**
C60	60	30	36	2	12	10	10.5	30	10	**NSYCNT60**

(1) Not perforated.

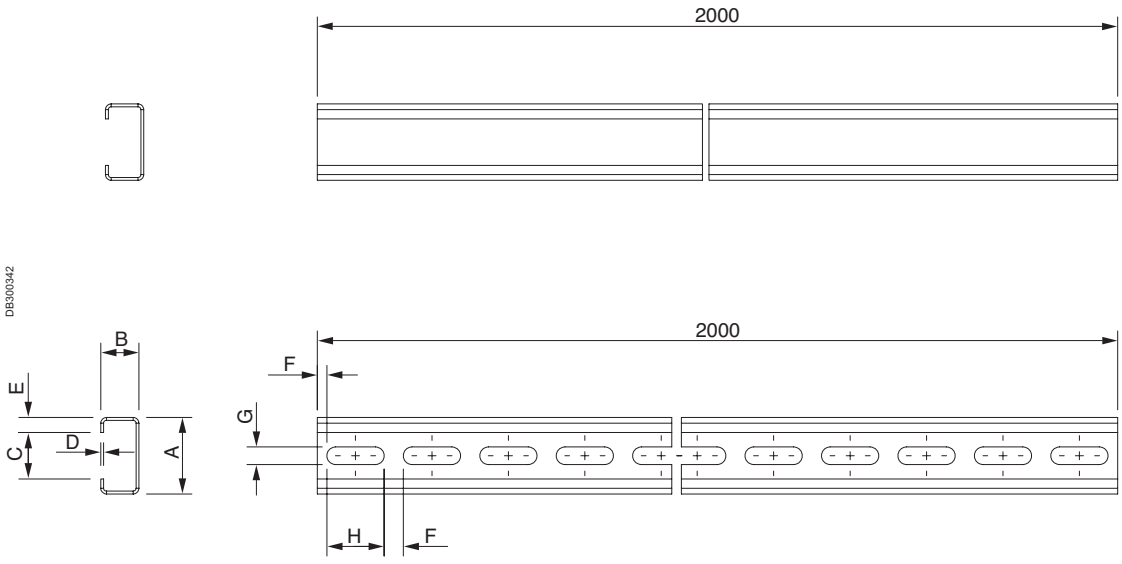

7

See also the accessories


PB500871

Fixing nuts page **7/68**


PB500871

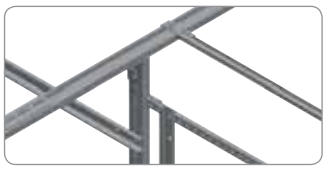
PB500509

Connectors for symmetric C shapped rails page **7/59**

Mounting
Rails

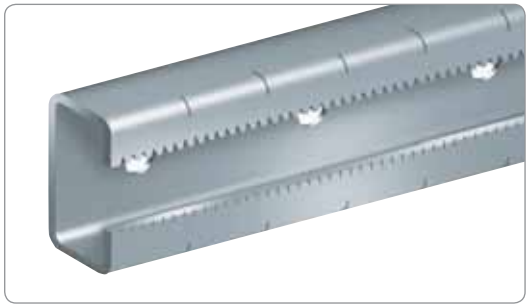
PB500872

Serrated C-shaped rail for heavy loads

- Marked in steps of 25 mm to facilitate switchgear positioning.
- Thickness: 2 mm.
- Material: zinc-coated steel.

Supply: 2 rails with a length of 2 m.

Dimensions (mm)	Reference
2000	**NSYSCR200**

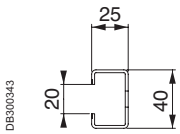

DB300343

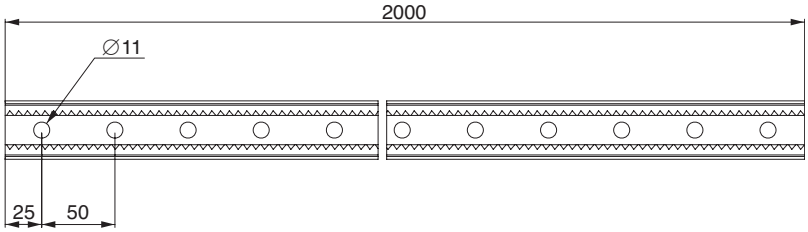

7

See also the accessories


PB500818

Fixing nuts page **7/68**

Mounting
Rails



PB500873

U-shaped rail

- Universal rails with elongated drill holes with a width of 8.5 mm which can house M4, M5 and M6 caged nuts.
- Material: galvanised steel.
- Thickness: 2 mm.

Supply: 20 rails with a length of 2 m.

References by unit. Order by multiples of 20 units (20, 40, etc.).

Dimensions (mm)	Reference
2000	**NSYCUT30**

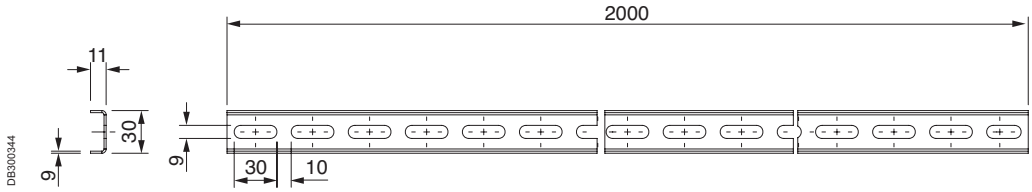

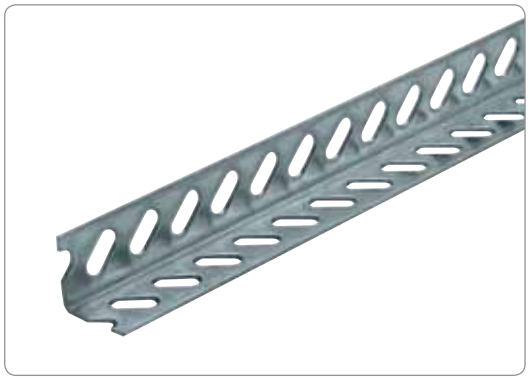

PB500874

L-shaped rail

- Universal rails with elongated drill holes with a width of 8.5 mm which allow housing of M4, M5 and M6 caged nuts.
- Material: galvanised steel.
- Thickness: 2 mm.

Supply: 20 rails with a length of 2 m.

References by unit. Order by multiples of 20 units (20, 40, etc.).

Dimensions (mm)	Reference
2000	**NSYAT32**

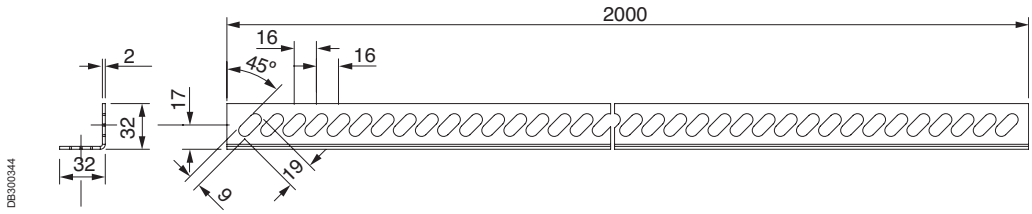

7

Mounting
Rails

Connectors for symmetric C-shaped rails

- The connectors enable the formation of chassis or frames and structures for fixing switchgear, in any position inside the enclosures, allowing the fixing of DIN rails or other elements.
- See symmetric C-shaped rails, page **7/56**.
- The fixing between connectors and rails is performed using combiplas nuts.

Examples of combinations with connectors for symmetric C-shaped rails



PB500509

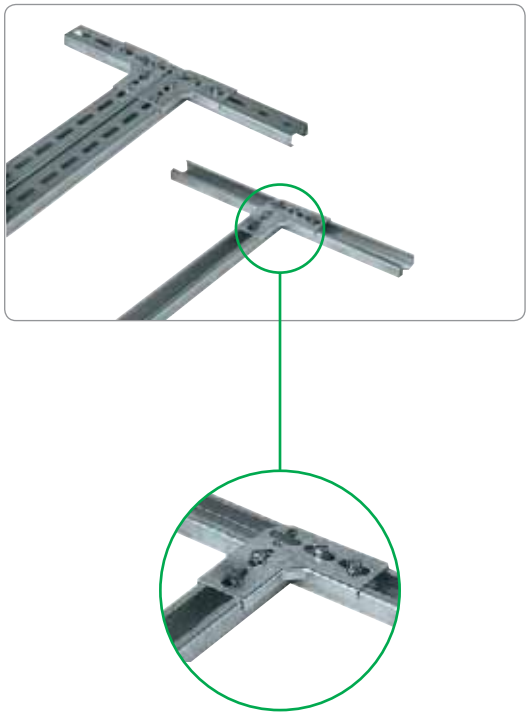

PB500875

EMA connectors

- The EMA connectors are used to joint two symmetric C-shaped rails, C20 and C40 types, at right angles; they can also be used to obtain a T-shaped assembly.
- Material: zinc-coated steel.
- Thickness: 2 mm.

Supply: 20 units.

References by unit. Order by multiples of 20 units (20, 40, 60, etc.).

A (mm)	B (mm)	C (mm)	D (mm)	E (mm)	Reference
60	21.3	6	6.2	15	**NSYEMA20**
100	40.3	10	8.5	25	**NSYEMA40**

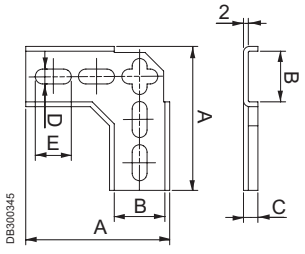

DB300345

Mounting
Rails

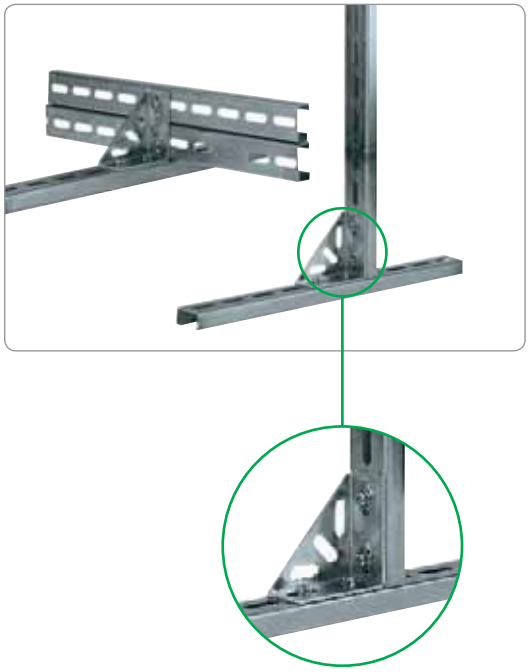
PB500876

EVA connectors

- The EVA connectors are used to join two symmetric C-shaped rails, C20 and C40 types, forming an overlapping assembly with plane change, or also at right angles for the formation of spacers or supports at a different level.
- Material: zinc-coated steel.

Supply: 20 units.

References by unit. Order by multiples of 20 units (20, 40, 60, etc.).

A (mm)	B (mm)	C (mm)	D (mm)	E (mm)	Reference
43	19	2	6.2	15	**NSYEVA20**
78	36	2.5	8.5	25	**NSYEVA40**

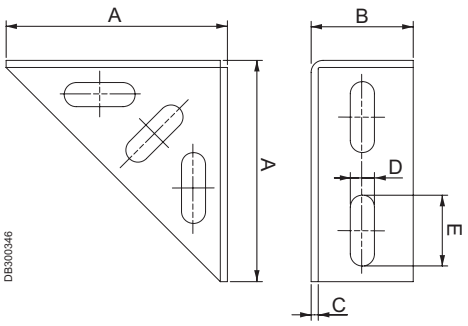

DB300346

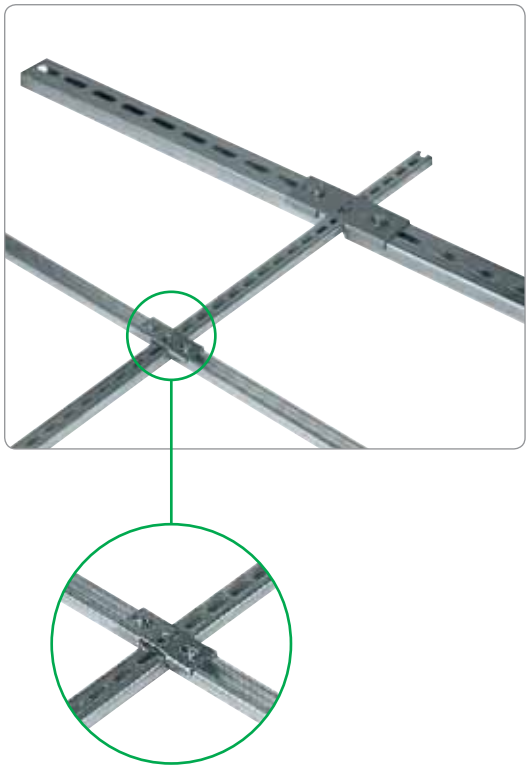
PB500877

UCA connectors

- The UCA connectors are used to join symmetric C-shaped rails, types C20 and C40, forming a cross-shaped assembly of three rails located on the same plane, for example inside a frame.
- Material: zinc-coated steel.

Supply: 20 units.

References by unit. Order by multiples of 20 units (20, 40, 60, etc.).

A (mm)	B (mm)	C (mm)	D (mm)	E (mm)	F (mm)	G (mm)	Reference
21.3	60	21.3	6	2	6.2	15	**NSYUCA22**
40.3	116	40.3	10	2.5	8.5	25	**NSYUCA44**

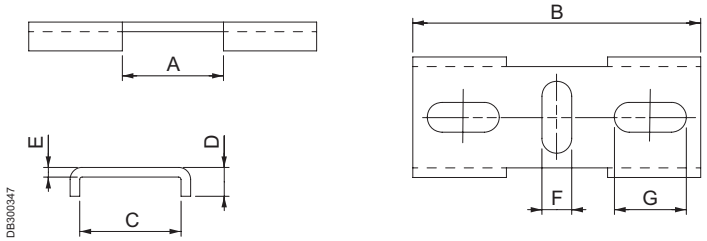

DB300347

Mounting
Rails

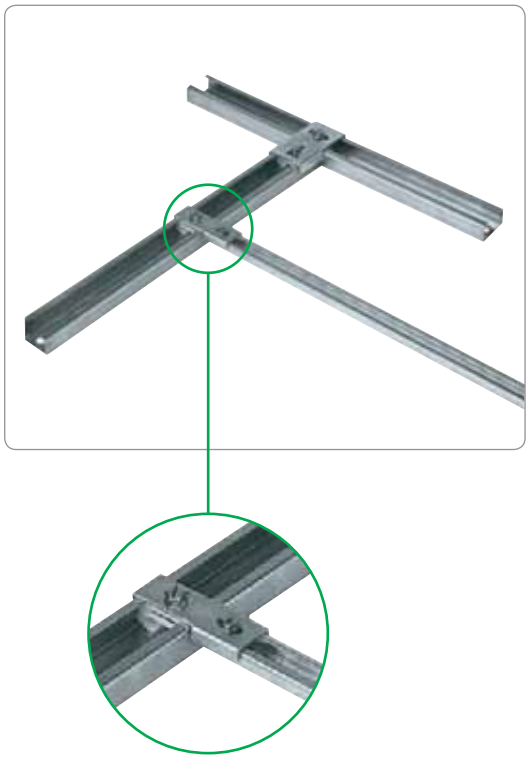
PB500878

UTA connectors

- The UTA connectors are used to create a T-shaped assembly between two symmetric C-shaped rails, C20 and C40 types, especially recommended for forming crossbars on chassis and frames.
- The UTA42 connectors type allows C20 rails to be joined with C40 rails.
- Material: zinc-coated steel.

Supply: 20 units.

References by unit. Order by multiples of 20 units (20, 40, 60, etc.).

A (mm)	B (mm)	C (mm)	D (mm)	E (mm)	F (mm)	G (mm)	Reference
21.3	21.5	53.5	8	2	6.2	15	**NSYUTA22**
21.3	40.5	72.5	8	2	6.2	15	**NSYUTA42**
40.3	40.5	81	10	2.5	8.5	25	**NSYUTA44**

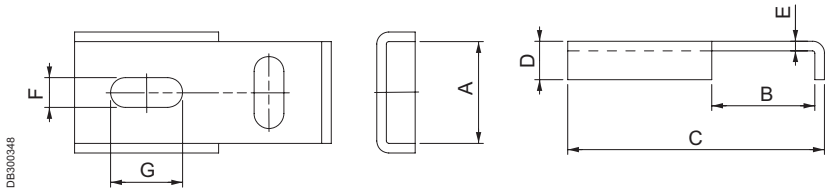

DB300348

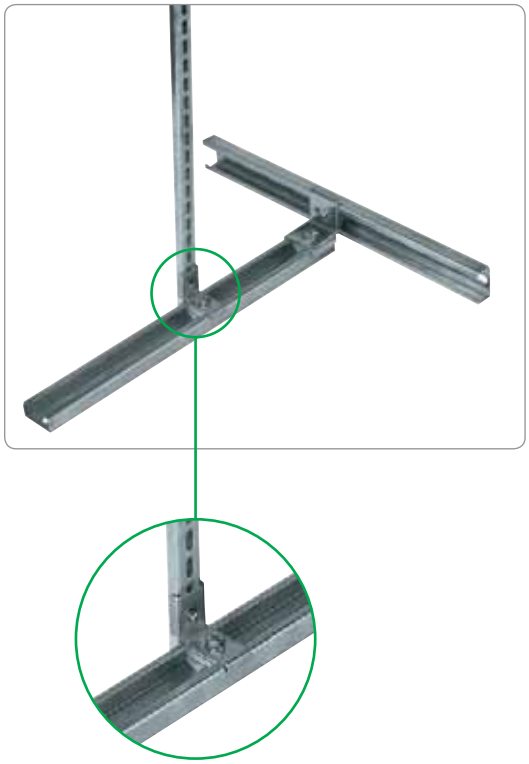
PB500879

ECA connectors

- The ECA connectors are used to form a cross-shaped assembly with two symmetric C-shaped rails, C20 and C40 types, located perpendicularly on different planes.
- The ECA42 connector type makes it possible to join C20 rails with C40 rails.
- Material: zinc-coated steel.

Supply: 20 units.

References by unit. Order by multiples of 20 units (20, 40, 60, etc.).

A (mm)	B (mm)	C (mm)	D (mm)	E (mm)	F (mm)	G (mm)	H (mm)	Reference
21.3	21.5	8	2	6.2	15	6.2	15	**NSYECA22**
21.3	40.5	8	2	6.2	15	6.2	13	**NSYECA42**
40.3	40.5	10	2.5	8.5	25	8.5	25	**NSYECA44**

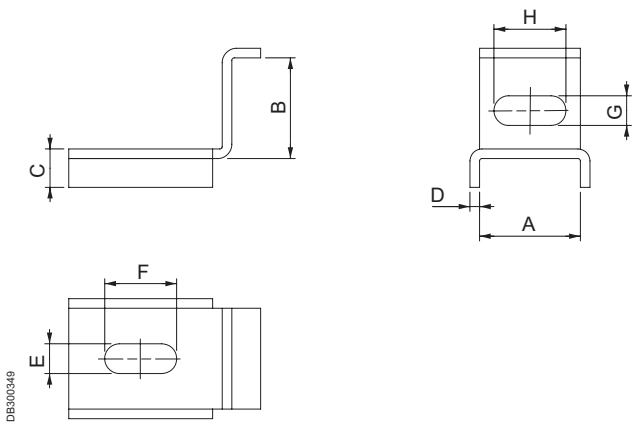

DB300349

Mounting
Rails


PB500880

UR connectors

- The UR connectors are used for rectilinear joining of symmetric C-shaped rails.
- Recommended when the standard length is not sufficient or for maximising fractions.
- Material: zinc-coated steel.

Supply: 20 units.

References by unit. Order by multiples of 20 units (20, 40, 60, etc.).

A (mm)	B (mm)	C (mm)	D (mm)	E (mm)	F (mm)	Reference
60	18	2	20	15	5	**NSYUR20**
130	36	3	40	30	10	**NSYUR40**
130	55	3	40	30	10	**NSYUR60**

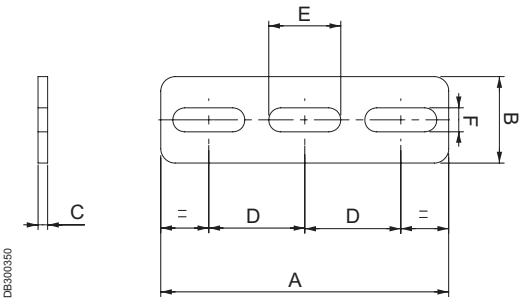

DB300350


PB500881

UT connectors

- The UT connectors are used to form T-shaped assemblies between symmetric C-shaped rails. They are used to form crossbars on frames and structures.
- Material: zinc-coated steel.

Supply: 20 units.

References by unit. Order by multiples of 20 units (20, 40, 60, etc.).

A (mm)	B (mm)	C (mm)	D (mm)	E (mm)	F (mm)	Reference
54	54	2	20	20	5	**NSYUT20**
60	80	2	20	25	8	**NSYUT40**
80	110	2	20	29	10	**NSYUT60**

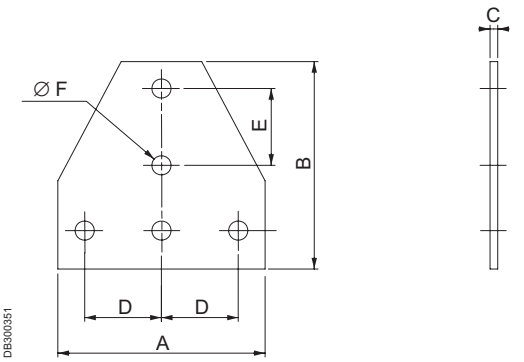

DB300351

Mounting
Rails



PB500882

EN connectors

- The EN connectors are used to create L-shaped assemblies with plane change in the symmetric C-shaped rails, between them or with any other section.
- Material: zinc-coated steel.

Supply: 20 units.

References by unit. Order by multiples of 20 units (20, 40, 60, etc.).

Reference
NSYEN20
NSYEN40
NSYEN60

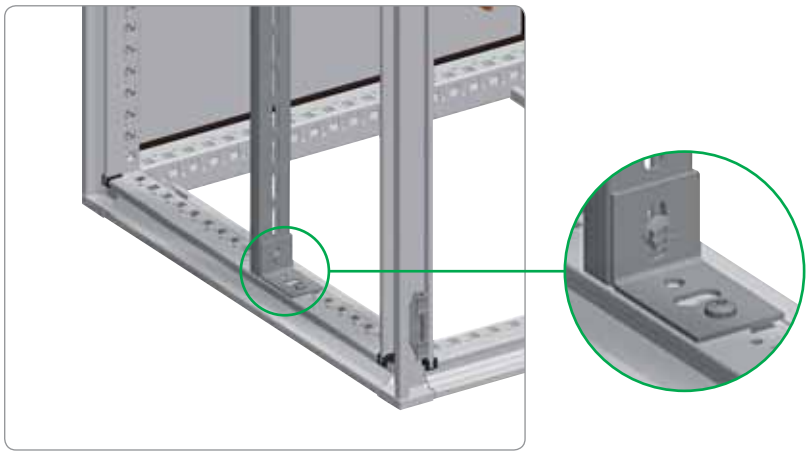

PB500883

NSYEN20

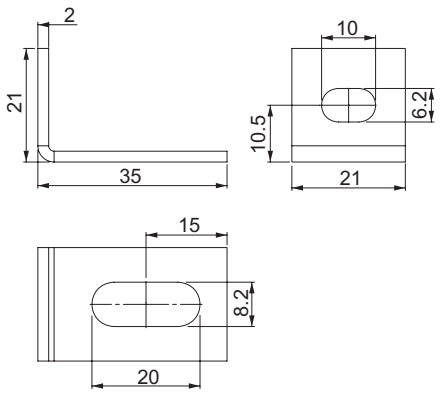

DB300352EN

NSYEN40

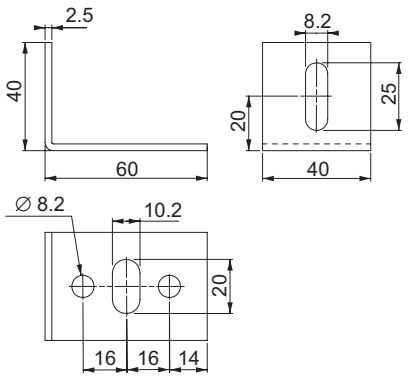

DB300353EN

NSYEN60

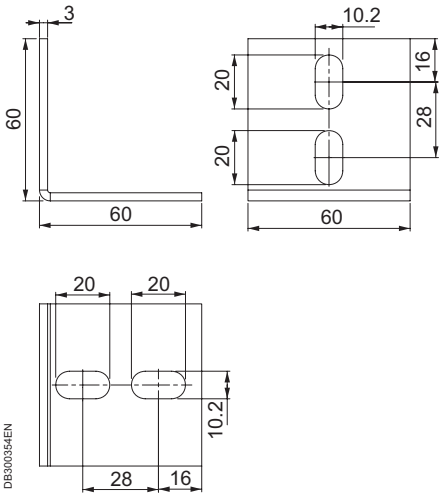

DB300354EN

7

Mounting
Rails


PB500778

Hexagonal spacers

- Hexagonal spacers for raising switchgear, mounting plates, etc. They can be linked together to achieve variable heights with gradual elevation.
- Their assembly requires M6 or M8 caged nuts.

Supply: 100 hexagonal connectors.

References by unit. Order by multiples of 100 units (100, 200, 300, etc.).

Spacer height (mm) (A)	Thread type (R)	Reference
10	M5	**NSYE1025**
15	M5	**NSYE1525**
20	M5	**NSYE2025**
10	M6	**NSYEX106**
12	M6	**NSYEX126**
14	M6	**NSYEX146**
16	M6	**NSYEX166**
18	M6	**NSYEX186**
20	M6	**NSYEX206**
30	M6	**NSYEX306**
40	M6	**NSYEX406**
50	M6	**NSYEX506**
100	M6	**NSYEX1006**
15	M8	**NSYEX158**
20	M8	**NSYEX208**
30	M8	**NSYEX308**
40	M8	**NSYEX408**
50	M8	**NSYEX508**
60	M8	**NSYEX608**
100	M8	**NSYEX1008**

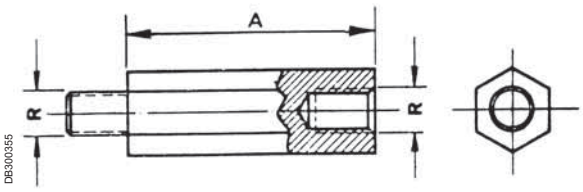

DB300355

7

Mounting
Rails


PB500884

ETU modular spacers

- Modular spacers for installing devices or rails at a different level from that achieved with the basic chassis or mounting plate.
- Material: zinc-coated steel.

Supply: 20 units.

References by unit. Order by multiples of 20 units (20, 40, 60, etc.).

A (mm)	B (mm)	Reference
48	25	**NSYETU48**
58	25	**NSYETU58**
79	55	**NSYETU79**
118	55	**NSYETU118**

Combination of spacers	Minimum height (mm)	Maximum height (mm)
NSYETU48 + NSYETU48	53	64
NSYETU48 + NSYETU58	63	74
NSYETU48 + NSYETU79	85	95
NSYETU48 + NSYETU118	124	134
NSYETU58 + NSYETU58	73	84
NSYETU58 + NSYETU79	94	104
NSYETU58 + NSYETU118	134	144
NSYETU79 + NSYETU79	84	125
NSYETU79 + NSYETU118	124	164
NSYETU118 + NSYETU118	164	204

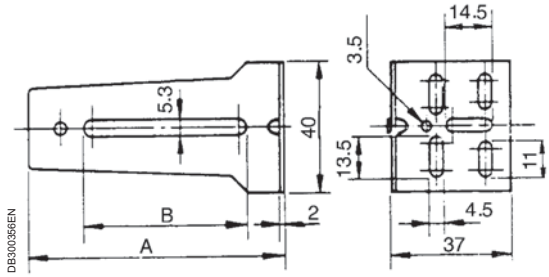

7

Mounting
Rails


PB500885

EMM modular spacers

- Progressive modular spacers. Every 2 mm combining two spacers, ref. **NSYEMM95**, a raised height of between 108 and 178 mm is obtained.
- Material: zinc-coated steel.

Supply: 10 units.

A (mm)	Reference
95	**NSYEMM95**

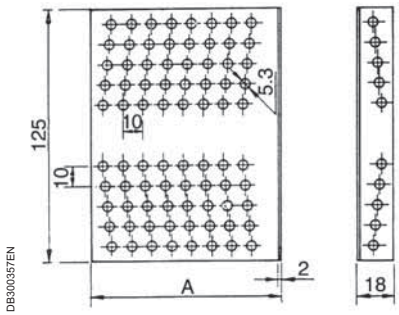

DB300357EN

Mounting
Nuts and screws for rails

Rail type	Nuts			
 Symmetric DIN rails page **7/50**	 Clip-on nut	M4	**NSYTDE4**	100
		M5	**NSYTDE5**	100
		M6	**NSYTDE6**	100
 Asymmetric DIN rails page **7/53**	 Quarter-turn sliding nut	M4	**NSYSNM4A**	100
		M5	**NSYSNM5A**	100
		M6	**NSYSNM6A**	100
 Double-profile DIN rails page **7/55**	 Quarter-turn sliding nut	M3	**NSYTDC34**	100
		M4		
		M5	**NSYTDC56**	100
		M6		

Fixings		
Screw with captive washer		
M4 × 10	**NSYS10M4H**	100
M4 × 16	**NSYS16M4H**	100
M5 × 12	**NSYS12M5H**	100
M5 × 18	**NSYS18M5H**	100
M6 × 12	**NSYS12M6H**	100
M6 × 16	**NSYS16M6H**	100
M6 × 18	**NSYS18M6H**	100

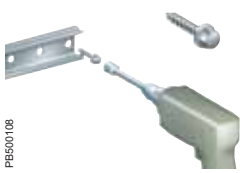	Self-tapping screw		
	M6 × 16	**NSYS16M6HS**	100
	M5 × 13	**NSYS13M5HS**	100
	Self-tapping screw		
	M5 × 16	**NSYS16M5HS**	100

References by unit. Order by multiples of 100 units (100, 200, 300, etc.).

Mounting
Nuts and screws for rails

Rail type	Nuts				Fixings		
 Symmetric C-shaped rails page **7/56**	 Combiplas nut	M3		-	100	M4 × 10	**NSYS10M4H**	100
		M4	**C20**	**NSYBN204**	100	M4 × 16	**NSYS16M4H**	100
		M6		**NSYBN206**	100	M5 × 12	**NSYS12M5H**	100
						M5 × 18	**NSYS18M5H**	100
						M6 × 12	**NSYS12M6H**	100
		M4	**C40**	**NSYBN404**	50	M6 × 16	**NSYS16M6H**	100
		M6		**NSYBN406**	50	M6 × 18	**NSYS18M6H**	100
		M8		**NSYBN408**	50	M8 × 16	**NSYS16M8H**	100
						M8 × 20	**NSYS20M8H**	100
		M4	**C60**	**NSYBN606**	20			
		M8		**NSYBN608**	20			
		M10		**NSYBN610**	20			
	 Metal sliding nut	M4	**C20**	**NSYB204**	100			
		M4	**C40**	**NSYB404**	100			
		M6		**NSYB406**	100			
 Serrated C-shaped rail for heavy loads page **7/57**	 (1) (2) Quarter-turn sliding nuts	M6 (1)		**NSYSNM6**	10			
		M8 (1)		**NSYSNM8**	10			
		M6 (2)		**NSYSNSM6**	10			
		M8 (2)		**NSYSNSM8**	10			

References by unit. Order by multiples of the units specified in the supply.

Accessories

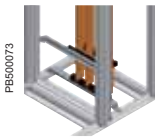

Power distribution 7/70

DLM modular chassis 7/70

DL modular chassis 7/72

Single-chassis coupling set 7/75

Double-chassis coupling set 7/76

Chassis-coupling set with zone for busbars 7/77

Cover plates 7/78

Set of fixed rail 7/81

Reinforced plate supports 7/83

Cable duct fixing supports 7/84

Busbars and blocks 7/85

Busbars support accessories 7/91

Sigma safety terminals 7/96

Terminals 7/97

Earthing strips 7/98

7

Power distribution
Modular distribution


PB500887


PB500408

For ranges
CRN, S3X, S3D

DLM modular chassis

- The chassis consists of metal cut-out front panels, which can be clipped on without screws, structured finish, epoxy-polyester powder, RAL-7035 grey, on a rigid galvanised-steel structure.
- The depth of the chassis can be adjusted from 40 to 85 mm, between the rail and the front panel, allowing the installation of all types of devices.

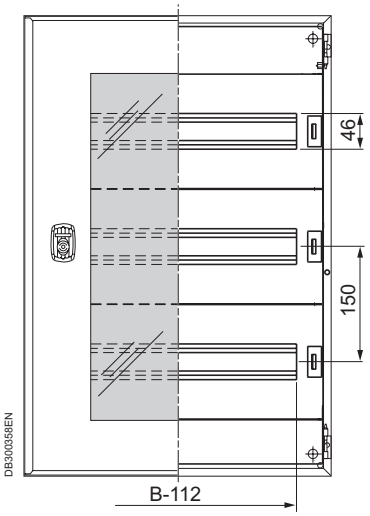

Front-panel cut-out
(see page **7/71**)

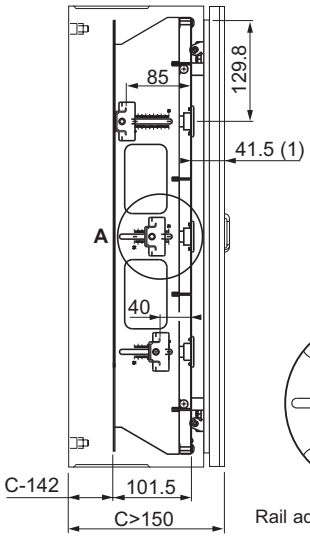

Detail A

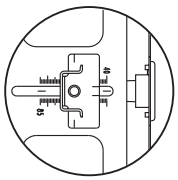

Rail adjustment: 45 mm


PB500408


PB500888


PB500889

Dimensions (mm)		Number of modules*	Modular chassis reference	Plain front plate reference	Plain chassis reference
Height	Width				
400	300	24	**NSYDLM24**	**NSYCTL300DLM**	**NSYPMP300DLM**
500	400	48	**NSYDLM48**	**NSYCTL400DLM**	**NSYPMP400DLM**
600	400	48	**NSYDLM48P**	**NSYCTL400DLM**	**NSYPMP400DLM**
600	600	84	**NSYDLM84P**	**NSYCTL600DLM**	**NSYPMP600DLM**
700	500	66	**NSYDLM66**	**NSYCTL500DLM**	**NSYPMP500DLM**
700	500	88	**NSYDLM88**	**NSYCTL500DLM**	**NSYPMP500DLM**
800	600	84	**NSYDLM84**	**NSYCTL600DLM**	**NSYPMP600DLM**
800	600	112	**NSYDLM112**	**NSYCTL600DLM**	**NSYPMP600DLM**
1000	600	168	**NSYDLM168**	**NSYCTL600DLM**	**NSYPMP600DLM**
1000	800	234	**NSYDLM240**	**NSYCTL800DLM**	**NSYPMP800DLM**

* 1 module = 2 steps = 18 mm.

Power distribution
Modular distribution

Number of modules per chassis in steps of 18 mm

DB300360



Chassis reference	NSYDLM24	NSYDLM48	NSYDLM48P	NSYDLM84P	NSYDLM66	NSYDLM88	NSYDLM84	NSYDLM112	NSYDLM168	NSYDLM240
Enclosure height (mm)	400	500	600	600	700	700	800	800	1000	1000
Enclosure width (mm)	300	400	400	600	500	500	600	600	600	800
Number of rows	2	3	3	3	3	4	3	4	6	6
Modules per row	12	16	16	28	22	22	28	28	28	39
Total n. of modules	24	48	48	84	66	88	84	112	168	234

*For references **NSYDLM48**, **NSYDLM48P** and **NSYDLM84** on Spacial wall-mounting enclosures the central row can only receive modules at the height of the lock when installed at the front of the enclosure. In this case, 1 module is sealed up (check our technical instructions).

PB500888



Plain front panel

- Metal front panels to be clipped on without screws, structured finish, 100% polyester powder, RAL-7035 grey colour.
- Nominal height: 150 mm.

Composition: 2 plain front panel and fixings.

Enclosure width (mm)	No. of modules	Reference
300	12	**NSYCTL300DLM**
400	16	**NSYCTL400DLM**
500	22	**NSYCTL500DLM**
600	28	**NSYCTL600DLM**
800	40	**NSYCTL800DLM**

PB500889



Plain mounting plate

- Mounting plate for fixing non-modular devices.
- Material: galvanised steel, 2 mm thick.
- Nominal height: 150 mm.

Composition: 2 plain chassis and fixings.

Enclosure width (mm)	A (mm)	Reference
300	208	**NSYPMP300DLM**
400	308	**NSYPMP400DLM**
500	408	**NSYPMP500DLM**
600	508	**NSYPMP600DLM**
800	708	**NSYPMP800DLM**

DB300361

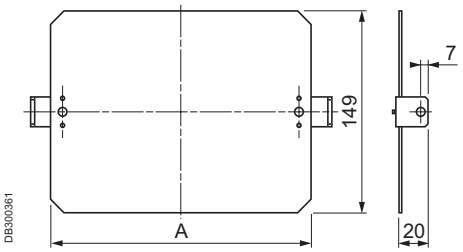

Sheet, 2 mm thick

Power distribution
Modular distribution



NSYCRN64150P + NSYDLCR64

For ranges
CRN, S3X, S3D*

DL modular chassis

Dinimel chassis designed for devices with heights of 53 and 68 mm, which can be coupled directly to the enclosure plate-support bolts. Manufactured from sheet steel. Metal protective cover plate, RAL-7035 colour.

- Distance between device rail and protective cover plate: 45 mm.

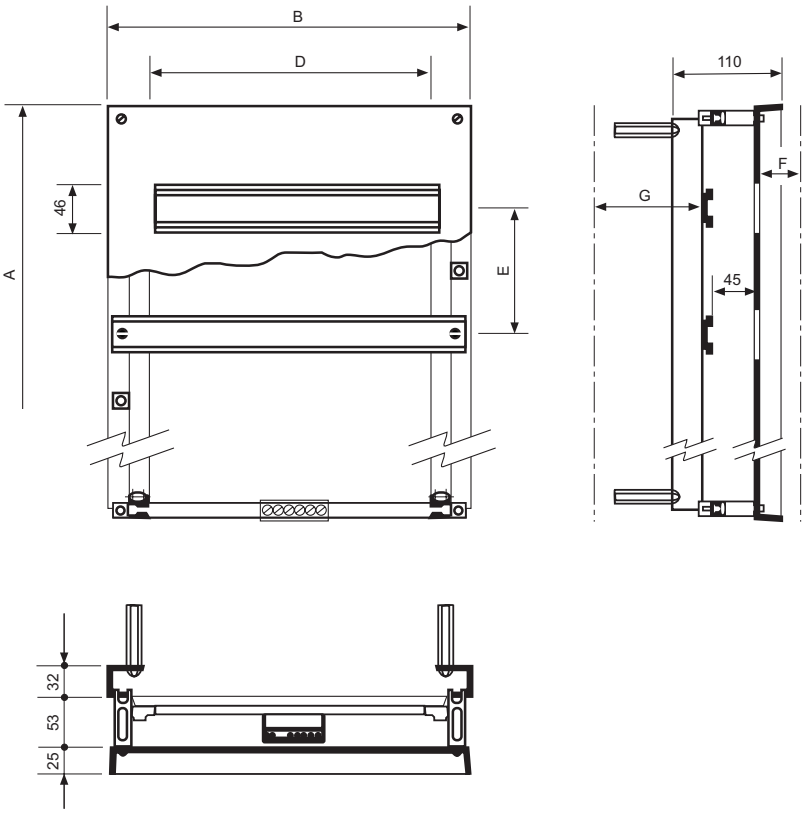

*For Spacial S3D please consult us.

Dimension F: Distance from the protective cover plate to the inside of the door.
Dimension G: Distance from the device-support rail to the rear of the enclosure.

Reference	No. of 18-mm modules	No. of rows	Approx. weight (kg)	For coupling to the enclosures with normal or transparent door			Dimensions (mm)					
				Height	Width	Depth	A	B	D	E	F**	G
NSYDLCR18	18	2	1.2	300	250	150*	255	205	162	120	41	51
NSYDLCR24	24	2	1.7	400	300	150*	355	255	216	160	41	51
NSYDLCR36	36	3	1.7	400	300	150*	355	255	216	110	41	51
NSYDLCR48	48	3	2.4	500	400	150*	455	355	288	130	41	51
NSYDLCR64	64	4	3.3	600	400	150/200	555	355	288	130	41	51/101
NSYDLCR88	88	4	4.5	600	500	150/200	555	455	396	130	41	51/101
NSYDLCR110	110	5	5.1	700	500	200	655	455	396	125	41	101
NSYDLCR135	135	5	7.5	800	600	200	755	555	486	140	41	101

* For coupling to enclosures with a depth of 200 mm, the stand-offs (ref. **NSYEX608**) are to be ordered separately (4 per chassis).
** For enclosures with transparent door, the F dimension is reduced by 4 mm.

See also the accessories



Plain front plates
page **7/71**



Blanking plate
page **7/73**

Power distribution
Modular distribution


PB500890

Blanking plate

Blanking plate made from fire-proof insulating material, for full or partial covering of the circuit-breaker windows; it can easily be cut to the required size.

Length (mm)	N°. of modules	RAL	Reference
72	4	7032	**NSYATP72G**
72	4	7035	**NSYATP72MS**
108	6	7035	**NSYATP6DTM**
432	24	7035	**NSYATP24DTM**
1100	-	7035	**NSYATPUND**

See also the accessories


PB500891

Connecting strips page **7/98**

Power distribution
Modular distribution


PB500524

Modular distribution system

- The modular distribution system is made up of a range of accessories prepared for forming electric panels with high distribution capacity.
- The accessories are installed on a chassis mounted at the front of the enclosure, such as for example:

– Cover plates for enclosures with widths of 600 and 800, solid or cut-out in screwed-on or hinged versions. They cover 24 or 36 modules per row, depending on the width of the enclosure.
– Material support rails, fixed or with adjustable depth.
– Chassis supports for coupling non-modular equipment.
– Supports for fixing cable-distribution cable ducts.

- Sets of accessories made up of material-supporting frames with chassis and cover plates are offered for the construction of double or busbar modular chassis. All the accessories of the individual chassis system can also be combined in the same way with the double chassis or with the chassis with busbar area.

Modular distribution accessories

For ranges
SF, SM

- Schneider Electric has developed a broad range of accessories for the construction of modular distribution frames, meeting the needs of the market.
- The new range has a coupling chassis, installed at the front of the enclosure, allowing the installation of:

– Cover plates with lengths of 600 and 800 mm, plain and cut-out, screwed on and hinged, with heights of 150, 200, 300, 400, 450 and 600 mm.
– Material support rails, fixed or with adjustable depth.
– Mounting plate supports, plain or perforated, for installation of non-modular devices.

- For the construction of double modular distribution frames or with busbar chamber, specific coupling chassis have been created for these applications.


PB500892


PB500893


PB500894

Power distribution
Modular distribution

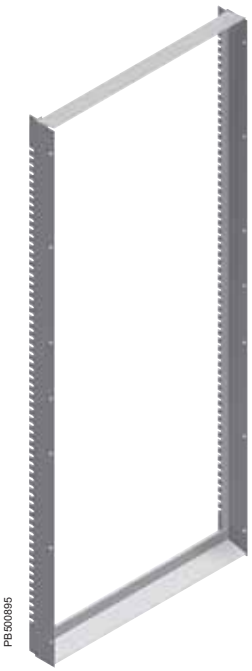
PB500895

Single-chassis coupling set

- Chassis made up of vertical uprights and horizontal crossbars:
  – **Spacial SF:** they are screwed to the front frame of the enclosure.
  – **Spacial SM:** they are screwed to the front frame of the enclosure by means of the vertical adaptation profiles, see page **7/33**.
- Easy access to the inside for component installation.
- Material: steel.
- Finish: painted with epoxy-polyester resin, textured RAL-7035 grey.

Supply: two vertical uprights, two horizontal crossbars and fixing elements.

Nominal dimensions (mm)		Maximum no.of 18-mm modules	Reference
Height (A)	Width (B)		
1200	600	144	**NSYCSH126**
	800	216	**NSYCSH128**
1400	600	192	**NSYCSH146**
	800	288	**NSYCSH148**
1600	600	216	**NSYCSH166**
	800	324	**NSYCSH168**
1800	600	240	**NSYCSH186**
	800	360	**NSYCSH188**
2000	600	288	**NSYCSH206**
	800	432	**NSYCSH208**

For ranges SF, SM

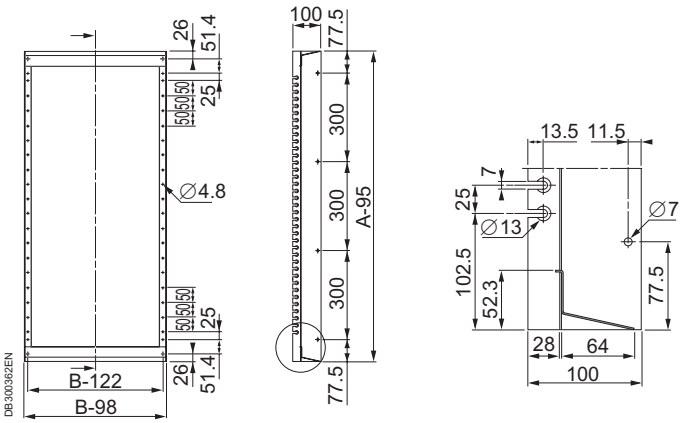

Example of the combination of cut-out, screwed-on cover plates and single-chassis coupling set

Nominal dimensions (mm)		No. of 18-mm modules	Reference		
Height (A)	Width (B)		1 single-chassis coupling set	5 screwed-on cut-out cover plates	2 adjustment cover plates
1800	600	240	1 × **NSYCSH186**	5 × **NSYMUC306**	1 × **NSYADC16**

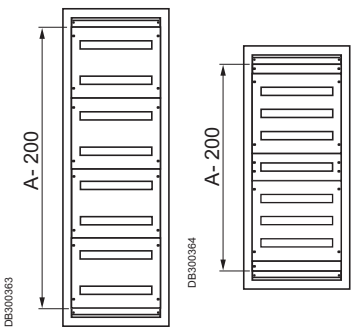

Power distribution
Modular distribution

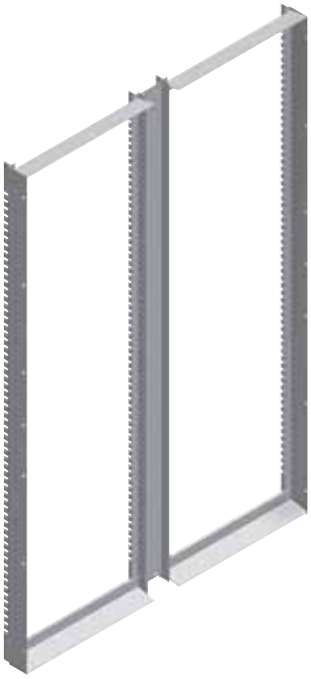
PB500896

For ranges SF, SM

Double-chassis coupling set

- Mounting on enclosures with widths of 1200 and 1600 mm.
- Installation on **Spacial SM**: they are screwed to the front frame of the enclosure by means of the vertical adaptation profiles, see page **7/33**.
- Set made up of two modular chassis with an intermediate central upright.
- **Spacial SM:** for enclosures with a width of 1200 mm the top/bottom adjustment rails are necessary.
- **Spacial SF:** the double-door enclosure adaptation kit is required for enclosure widths of 1200 and 1600 mm, see page **7/19**.
- Material: steel.
- Finish: painted with epoxy-polyester resin, textured RAL-7035 grey.

Supply: two single-chassis coupling sets, one intermediate central upright and fixing elements.

Spacial dimensions (mm)		Set made up of columns with a width (mm)	Maximum no. of 18-mm modules	Reference
Height	Width			
1400	1200	600 + 600	384	**NSYDCSH1412**
1600	1200	600 + 600	432	**NSYDCSH1612**
1800	1200	600 + 600	480	**NSYDCSH1812**
	1600	800 + 800	720	**NSYDCSH1816**
2000	1200	600 + 600	576	**NSYDCSH2012**
	1600	800 + 800	864	**NSYDCSH2016**

Example of the combination of cut-out, screwed-on cover plates and double-chassis coupling set

Spacial dimensions (mm)			No. of 18-mm modules	Reference		
Height (A)	Width (B)	Depth (C)		1 double-chassis coupling set	12 screwed-on cut-out 300-mm cover plates	Double-door enclosure adaptation kit
2000	1200	500	576	1 × **NSYDCSH2012**	12 × **NSYMUC306**	**NSYSMP2D5**
	1600	500	864	1 × **NSYDCSH2016**	12 × **NSYMUC308**	**-**

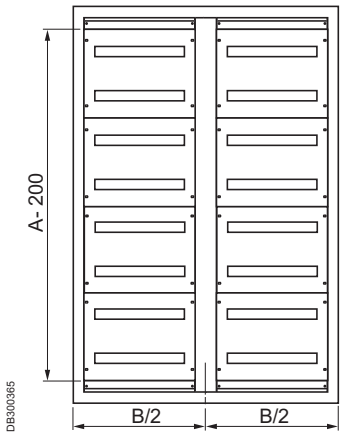

DB300365

Power distribution
Modular distribution

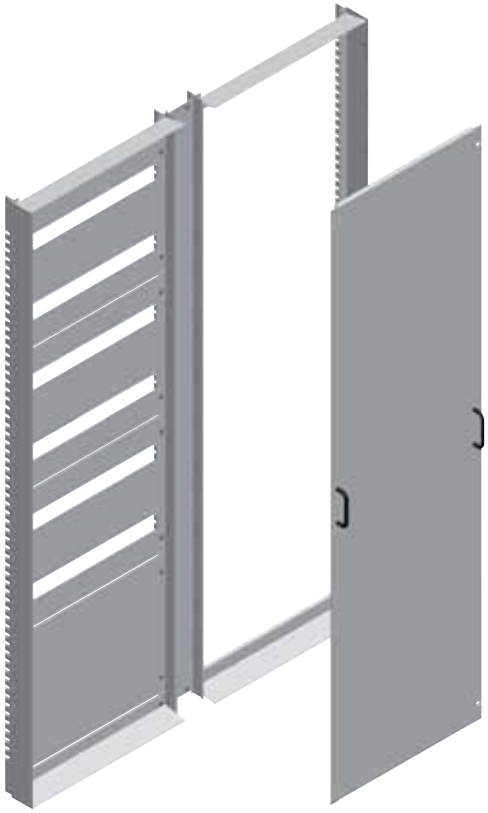
PB500899

For ranges SF, SM

Chassis-coupling set with zone for busbars

- Set for mounting on enclosures with widths of 1000 and 1200 mm.
- **Spacial SF:** They are screwed to the front frame enclosure.
- **Spacial SM:** They are screwed to the front frame of the enclosure by means of the vertical and horizontal adaptation profiles, see page **7/33**.
- Assembly made up of a modular chassis with an intermediate central upright and a blanking cover plate for busbars (width 300 mm).
- Material: steel.
- Finish: painted with epoxy-polyester resin, textured RAL-7035 grey.

Supply:
– One single-chassis coupling set.
– One intermediate central upright.
– One busbar blanking cover plate.
– Fixing elements.

Nominal dimensions (mm)		Set made up of columns with a width (mm)	Maximum no. of 18-mm modules	Reference
Height	Width			
1400	1000	600 + 400	192	**NSYCSHB1410**
	1200	800 + 400	288	**NSYCSHB1412**
1600	1000	600 + 400	216	**NSYCSHB1610**
	1200	800 + 400	324	**NSYCSHB1612**
1800	1000	600 + 400	240	**NSYCSHB1810**
	1200	800 + 400	360	**NSYCSHB1812**
2000	1000	600 + 400	288	**NSYCSHB2010**
	1200	800 + 400	432	**NSYCSHB2012**

Example of the combination of cut-out, screwed-on cover plates and chassis-coupling set with busbar zone

Nominal dimensions (mm)		No. of 18-mm modules	Reference		
Height (A)	Width (B)		1 chassis-coupling set with zone for busbars	5 screwed-on cut-out 300-mm cover plates	2 adjustment cover plates
1800	1000	240	1 × **NSYCSHB1810**	5 × **NSYMUC306**	1 × **NSYADC16**
1800	1200	360	1 × **NSYCSHB1812**	5 × **NSYMUC308**	1 × **NSYADC18**

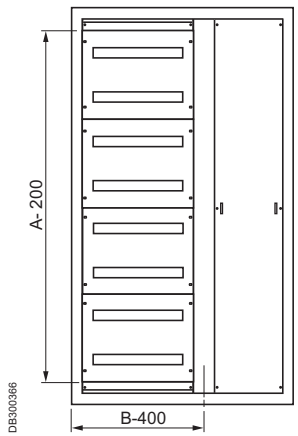

DB300366

Power distribution
Modular distribution

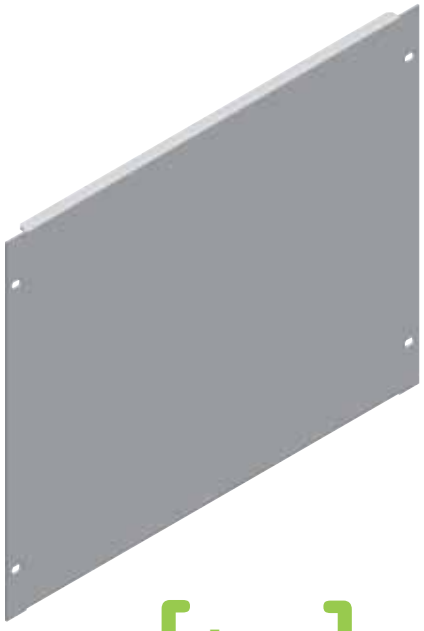
PB500900

For ranges
SF, SM


PB500901

Plain cover plates

- Metal cover plates for protecting control devices.
- The cut-outs in non-modular control devices is at user's request
- Suitable by modules of 150 or 200 mm.
- Versions:

– Screwed-on plain cover plate.
– Hinged plain cover plate. 120° opening with flat hinge.

- Material: steel.
- Finish: painted with epoxy-polyester resin, textured RAL-7035 grey.

Supply: one plain cover plate and fixing elements.

Nominal dimensions (mm)		Screwed-on plain cover plate reference	Hinged plain cover plate reference
Height (A)	Width (B)		
150	600	NSYMPC156	NSYMPCH156
	800	NSYMPC158	NSYMPCH158
200	600	NSYMPC206	NSYMPCH206
	800	NSYMPC208	NSYMPCH208
300	600	NSYMPC306	NSYMPCH306
	800	NSYMPC308	NSYMPCH308
400	600	NSYMPC406	NSYMPCH406
	800	NSYMPC408	NSYMPCH408
450	600	NSYMPC456	NSYMPCH456
	800	NSYMPC458	NSYMPCH458
600	600	NSYMPC606	NSYMPCH606
	800	NSYMPC608	NSYMPCH608

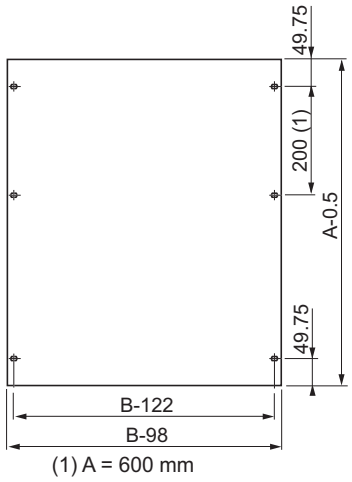

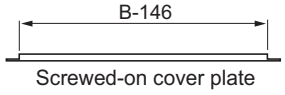

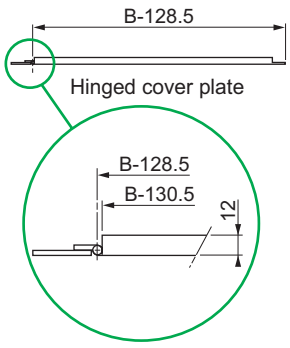

DB300367EN

7

Power distribution
Modular distribution

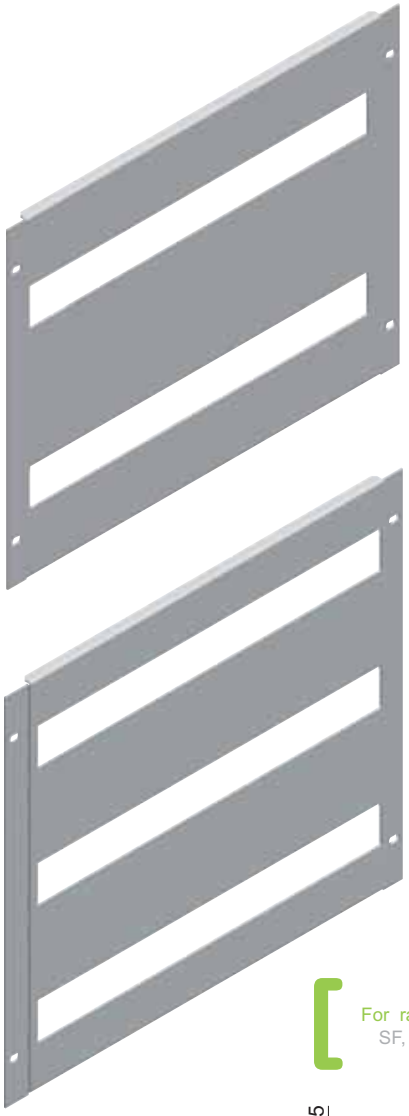
PB500902

PB500903

Cut-out cover plates

- Cut-out metal cover plates for modular switchgear (1 module = 18 mm).
- Suitable by modules of 150 or 200 mm.
  – Cover plates for 600-mm enclosures: 24 modules per row.
  – Cover plates for 800-mm enclosures: 36 modules per row.
- Versions:
  – Screwed-on cut-out cover plate.
  – Hinged cut-out cover plate. 120° opening with flat hinge.
- Material: steel.
- Finish: painted with epoxy-polyester resin, textured RAL-7035 grey.

Supply: one cut-out cover plate and fixing elements.

Nominal dimensions (mm)		Dimensions			No. of cut-outs	Maximum no. of 18-mm modules	Screwed-on cut-out cover plate reference	Hinged cut-out cover plate reference
Height (A)	Width (B)	D	E	F				
150	600	432	-	-	1	24	**NSYMUC156**	**NSYMUCH156**
	800	642			1	36	**NSYMUC158**	**NSYMUCH158**
200	600	432	-	-	1	24	**NSYMUC206**	**NSYMUCH206**
	800	642			1	36	**NSYMUC208**	**NSYMUCH208**
300	600	432	51.75	150	2	48	**NSYMUC306**	**NSYMUCH306**
	800	642			2	72	**NSYMUC308**	**NSYMUCH308**
400	600	432	76.75	200	2	48	**NSYMUC406**	**NSYMUCH406**
	800	642			2	72	**NSYMUC408**	**NSYMUCH408**
450	600	432	51.75	150	3	72	**NSYMUC456**	**NSYMUCH456**
	800	642			3	108	**NSYMUC458**	**NSYMUCH458**
600	600	432	76.75	200	3	72	**NSYMUC606**	**NSYMUCH606**
	800	642			3	108	**NSYMUC608**	**NSYMUCH608**

For ranges SF, SM

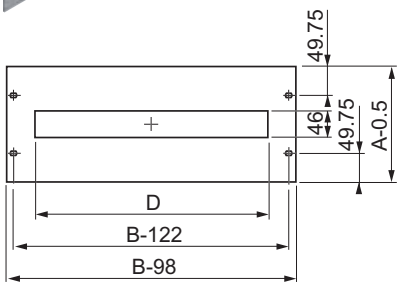

A = 150 and 200 mm

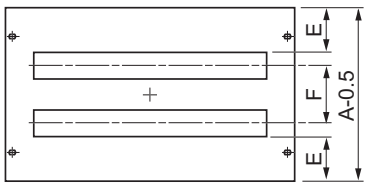

A = 300 and 400 mm

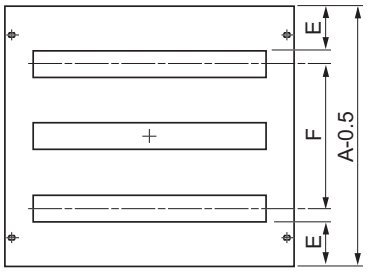

A = 450 and 600 mm

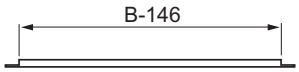

Screwed-on cover plate

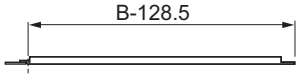

DB300368EN

Hinged cover plate

Power distribution
Modular distribution


PB500904

Adjustment cover plates

- Metal adjustment cover plates designed to complete the front of the modular chassis according to the combinations made by modules of 150 or 200 mm.
- Material: steel.
- Finish: painted with epoxy-polyester resin, textured RAL-7035 grey.

Supply: two adjustment cover plates and fixing elements.

Cover plate dimensions (mm)	Nominal dimensions (mm)	Reference
Height	Width	
50	600	**NSYADC16**
	800	**NSYADC18**

For ranges SF, SM


PB500905

Blanking covers

- Blanking covers for cut-out cover plates.
- Each cover is made up of four strips of four modules each (1 module = 18 mm).
- Material: plastic.
- Finish: RAL-7035 grey.

Supply: 25 strips of 4 modules.

Reference
NSYATP72M


PB500906

Power distribution
Modular distribution


PB500907

For ranges SF, SM

Set of fixed rail with supports

- Set made up of a galvanised symmetric DIN rail, 35 × 15 mm, and fixed mounting supports, for the installation of modular devices or not.
- Maximum number of 18-mm modules:
– Enclosure width 600 mm: 24 modules.
– Enclosure width 800 mm: 36 modules.
- Mounting by screws directly on the uprights of the chassis-coupling set.
- Material: zinc-coated steel.

Supply: one DIN rail, two fixed supports and fixing elements.

Nominal dimensions (mm) Width (B)	Reference
600	**NSYMFSC60**
800	**NSYMFSC80**

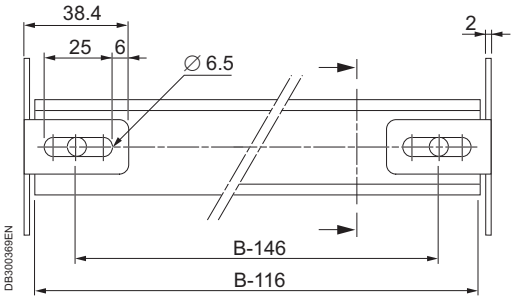

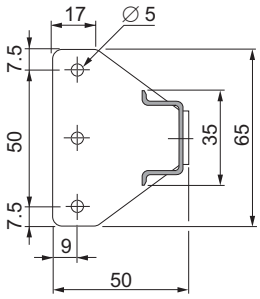


PB500908

Fixed supports with no rail

Supply: two fixed supports and fixing elements.

Reference
NSYMFS1

7

Power distribution
Modular distribution


PB500909

For ranges SF, SM

Set of depth-adjustable rail with supports

- Set made up of a galvanised symmetric DIN rail, 35 × 15 mm, and depth-adjustable mounting supports, for the installation of modular devices or not.
- Maximum number of 18-mm modules:
  – Enclosure width 600 mm: 24 modules.
  – Enclosure width 800 mm: 36 modules.
- Mounting by screws directly on the uprights of the modular chassis-coupling set.
- Material: zinc-coated steel.

Supply: one DIN rail, two adjustable supports and fixing elements.

Nominal dimensions (mm) Width (B)	Reference
600	**NSYMFSC60D**
800	**NSYMFSC80D**

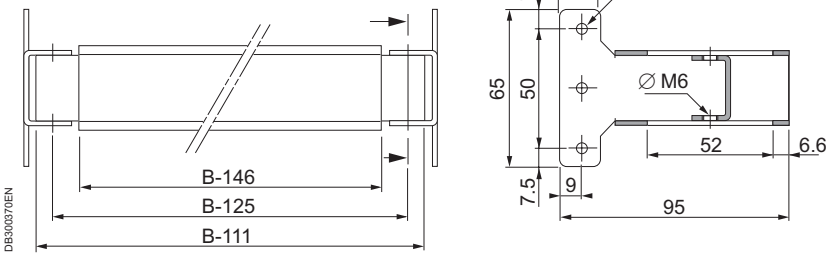


PB500910

Adjustable supports with no rail

Supply: two adjustable supports and fixing elements.

Reference
NSYMFS1D

7

Power distribution
Modular distribution

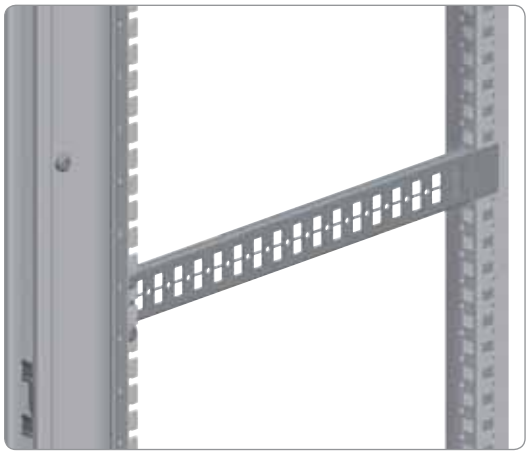
PB500911


PB500912

For ranges SF, SM

Reinforced plate supports

- Supports for fixing the partial mounting plate for small non-modular equipment or material-supporting cross rails for heavy equipment. See partial mounting plate, page **7/21**.
- Direct fixing by screws to the vertical uprights of the modular chassis-coupling set, and at the rear directly to the structure **(Spacial SF)** and on universal or quick-fixing cross rails (see page **7/35**) installed vertically in the back of the enclosure **(Spacial SM)**.
- Material: zinc-coated steel.

Supply: two supports and fixing elements.

Nominal dimensions (mm) Depth (C)	No. of cut-outs (∅ 5.2 mm)	Reference
300	3	**NSYMPS30**
400	7	**NSYMPS40**
500	11	**NSYMPS50**
600	15	**NSYMPS60**
800	23	**NSYMPS80**

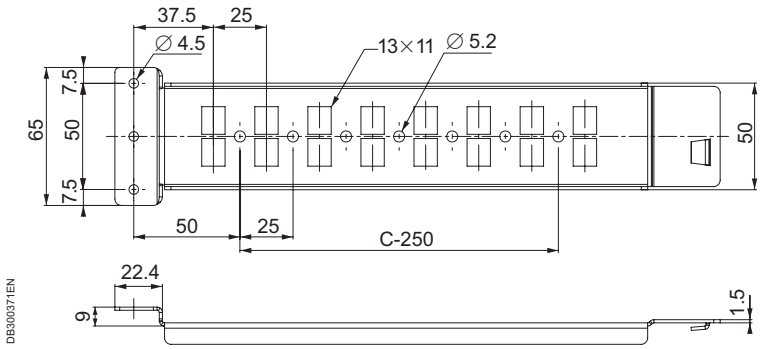

DB300371EN

Power distribution
Modular distribution

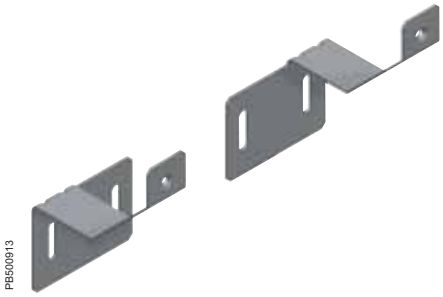
PB500913


PB500914

[For ranges SF, SM]

Cable duct fixing supports

- Supports for fixing cable-distribution gutters in the modular distribution chassis.
- Allows the fixing of gutters in horizontal and vertical position on the same plane to facilitate cable distribution.
- Installation by screws directly on the rail supplied with the fixed or adjustable rail, page **7/81**.
- Material: zinc-coated steel.

Supply: six supports (three on the right and three on the left) and fixing elements.

Reference
NSYMCDFIX

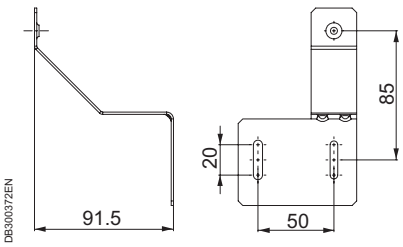

Left support

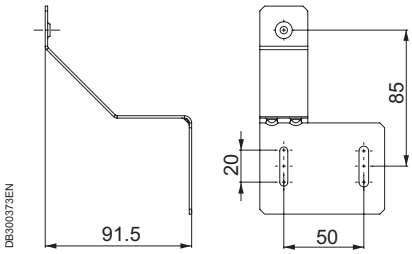

Right support

7

Power distribution
Busbars and blocks



Side panels for the side busbar chamber

- Set of 2 side panels fixed to the outside.
- Captive screws.
- Material: steel.
- Finish: painted with epoxy-polyester resin, textured RAL 7035 grey.

Supply: two side panels with external fixing and fixing elements.

Nominal dimensions (mm)		Reference
Height	Depth	
1800	400	**NSY2SP184**
	500	**NSY2SP185**
	600	**NSY2SP186**
2000	400	**NSY2SP204**
	500	**NSY2SP205**
	600	**NSY2SP206**
	800	**NSY2SP208**
2200	600	**NSY2SP226**

Power distribution
Busbars and blocks

For ranges SF, SM, SFX

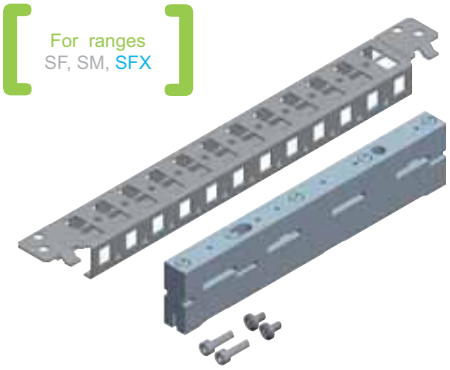
PB500915


PB500916


PB500917


PB500918

630 A bar support

- **Spacial SF:** support prepared for coupling directly to the structure of the enclosure.
- **Spacial SFX:** A universal cross rail is needed, in some cases, to replace the 400 mm quick-fixing cross rail.
- **Spacial SM:** installation by means of a vertical adaptation profile and 40 mm universal cross rails (1 row).
- Maximum nominal rating 630 A.
- Determine according to the enclosed table the cross-section of the bars and the distance between supports, according to the nominal and short-circuit current respectively.

Supply: one 630 A bar support, one 40 mm quick-fixing cross rail and fixing elements.

Nominal dimensions (mm) Width/Depth	Reference
400	**NSYBS400**
500	**NSYBS500**
600	**NSYBS600**
800	**NSYBS800**

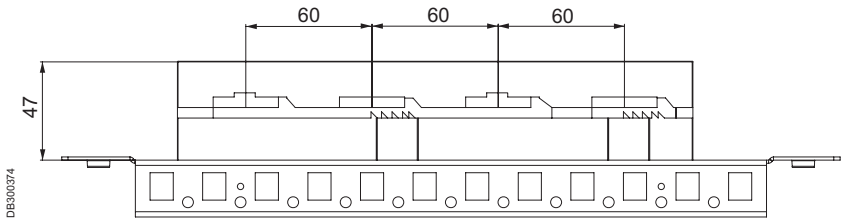

DB300374

Nominal rating IP55 NR (A)	No. of bars per phase	Bar cross-section (mm)	Bar cross-section (mm^2)	Maximum distance between bar supports according to the short-circuit current (mm)							Neutral (mm)	Earth (mm)
				Icc kA								
				12	23	30	39	52	66	69		
200	1	12 × 5	60	525	525	525	400	250	-	-	-	-
250	1	12 × 5	75	575	575	575	450	325	-	-	-	-
320	1	20 × 5	100	600	600	600	475	350	150	-	12 × 5-10	-
390	1	25 × 5	125	600	600	600	475	350	150	-	12 × 5-10	6 × 3
440	1	30 × 5	150	650	650	650	650	525	400	350	20 × 5-10	10 × 3
500	1	20 × 10	200	675	675	675	525	350	150	-	25 × 5-10	10 × 6
600	1	30 × 10	300	675	675	675	600	475	325	275	30 × 5-10	10 × 6


PB500919

630 A busbar end cover

- Busbar end protection.
- Direct installation on the actual bar support (insulator).

Supply: two 630 A bar support plates and fixing elements.

Reference
NSYBSC630

Power distribution
Busbars and blocks

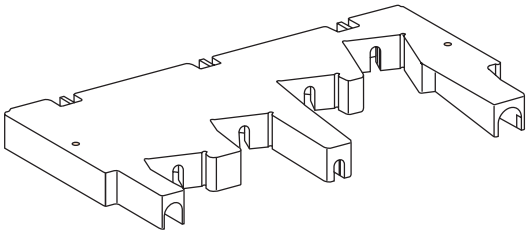
DB300375

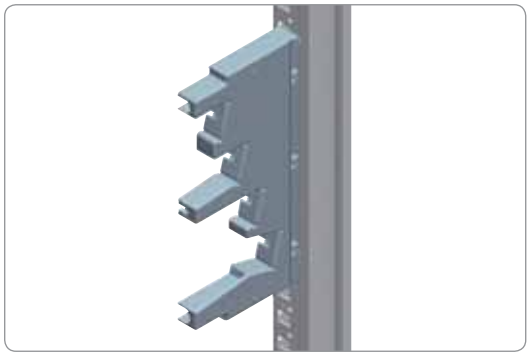
PB500920

630 A multi-stage bar support

- Support for fixing bars with cross-sections:
  – 15 × 5.
  – 20 × 5.
  – 32 × 5.
  – 32 × 8.
- The orientation of the copper bars makes tightening easier and allows better circulation of the cables.
- It can be 3-pole or 4-pole, with gauges from 160 to 630 A.
- Mounting on mounting plates (see page **7/10**) or cross-rails (see page **7/35**).
- Electrical characteristics:
  – Rated peak withstand current Ipk (kÂ):
    • 30 kÂ for 160 A busbar.
    • 40 kÂ for 250 A busbar.
    • 55 kÂ for 400 A and 630 A busbar.
  – Rated insulation voltage Ui = 750 V.
- Material: insulating plastic.

Supply: 1 multi-stage bar support and fixing elements.

- M6 × 25 self-tapping screws are required for fixing on the cross-rails, not included.

Reference
04192

- The following table shows:
  – The cross-section of the bars that will be used according to the current-carrying capacity in the busbar.
  – The distance between the bar supports that will be installed according to the rated short-time withstand current: Icw.

Amperage (A)	Bar cross-section (mm)	Centre-to-centre distance of the supports (mm)				
		Icw (kA eff/1 s)				
		10	13	15	20	25
160	15 × 5	450			300	300 (1)
250	20 × 5					
400	32 × 5					
630	32 × 8					

(1) Icw (kA eff/0.6 s).

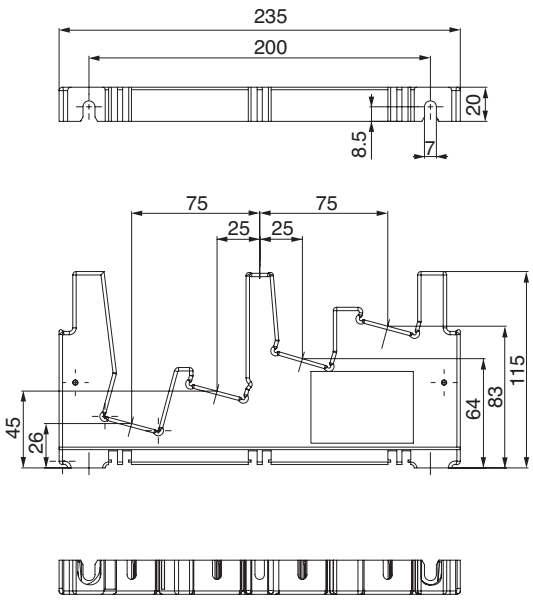

DB300376EN

Power distribution
Busbars and blocks

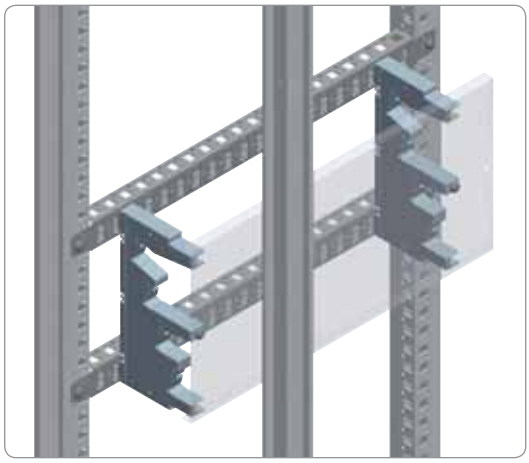
PB500921

Screen for 630 A multi-stage busbar

- Protects against direct contact from the front in the connections of the busbar.
- Direct mounting on the actual support.
- Length: 1500 mm.

Supply: 1 screen for multi-stage busbar and fixing elements.

Reference
04197

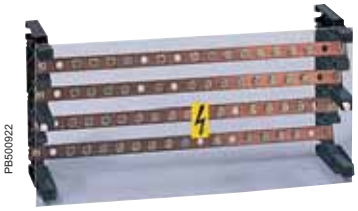
PB500922

160 A / 630 A four-pole multi-stage distribution block

- The orientation of the copper bars makes tightening easier and allows better circulation of the cables.
- The copper bars are supplied with:

– 13 holes for M6, for the outlets.
– 4 holes with ∅ 12.2 for supplying the distribution block.

- It can be 3-pole or 4-pole, with gauges from 160 to 630 A.
- Installation:

– Mounting plates (see page **7/10**) or cross-rails (see page **7/35**).

- Electrical characteristics:

– Rated operating current (40 °C):
  • 160 A.
  • 250 A.
  • 400 A.
  • 630 A.
– Rated insulation voltage Ui = 750 V.
– Rated short-time withstand current = Icw:
  • 10 kA eff/1 s for 160 A distribution block.
  • 13 kA eff/1 s for 250 A distribution block.
  • 20 kA eff/1 s for 400 A distribution block.
  • 25 kA eff/1 s for 630 A distribution block.
– Rated peak withstand current = Ipk:
  • 30 kÂ for 160 A distribution block.
  • 30 kÂ for 250 A distribution block.
  • 40 kÂ for 400 A distribution block.
  • 40 kÂ for 630 A distribution block.
– Rated impulse withstand voltage: Uimp = 8 kV.

- Distribution: 13 outlets for phase with max. 50 mm².

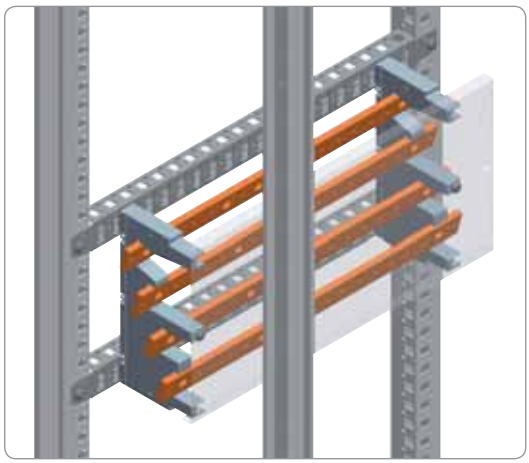
PB500923

Supply: 2 multi-stage bar supports, 4 cut-out copper bars with a pitch of 25 mm and 1 IPxxB insulating front cover.

- M6 × 25 self-tapping screws are required for fixing on the cross-rails, not included.

Model	Bar cross-section (mm)	Reference
160 A (40 °C)	15 × 5	**04052**
250 A (40 °C)	20 × 5	**04053**
400 A (40 °C)	32 × 5	**04054**
630 A (40 °C)	32 × 8	**04055**

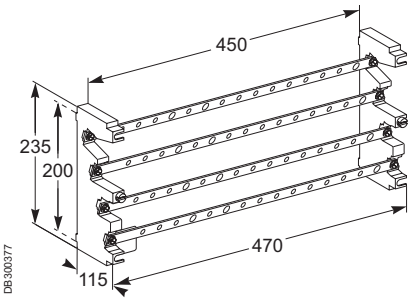

DB300377

Power distribution
Busbars and blocks


PB500924

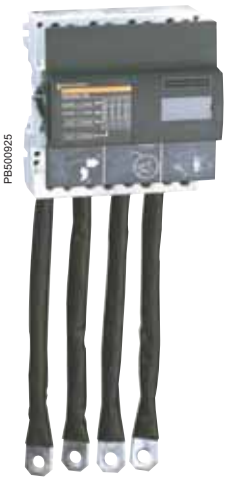
PB500925

Distribloc distribution block

- 4-pole distribution block.
- The outlets are connected by the front, on spring terminals. The pressure of this spring is adapted automatically to the cross-section of the conductor. It is independent from the operator.
- Degree of protection: IPxxB (protection against direct contacts).
- Installation:

– Clips onto DIN rails (see page **7/50**) and/or mounting plates (see page **7/10**).

- Electrical characteristics:

– Rated operating current (40 °C):
  • 125 A for Distribloc 125.
  • 160 A for Distribloc 160.
– Resistance to short-circuit currents: the interrupting capacity reinforced by filiation is conserved in the case of automatic switch associations.
– According to low-voltage switchgear standards UNE-EN 60947-7-1 and/or UNE-EN 60439-1.
– Rated impulse withstand voltage: Uimp = 8 kV.

- Power supply:

– 125 A Distribloc: screw terminal for flexible cables from 6 to 35 mm² (rigid from 10 to 35 mm²).
– 160 A Distribloc: by prefabricated flexible connection, supplied.

- Distribution (for 125 A and 160 A Distribloc):

– On spring terminals:
  • 2 outlets connected by flexible cables from 1 to 10 mm².
  • 3 outlets connected by flexible cables from 1 to 6 mm².
  • 7 outlets connected by flexible cables from 1 to 4 mm².
– On screw terminals:
  • 1 outlet connected by flexible cables from 4 to 16 mm² (rigid from 4 to 25 mm²).

Supply: single-piece distribution block, 1 IPxxB modular insulating screen and self-adhesive labels for identifying the phases. Prefabricated flexible connection in Distribloc 160.

Model	Reference
125 A distribution block	**04045**
160 A distribution block (with 4 flexible connectors)	**04046**

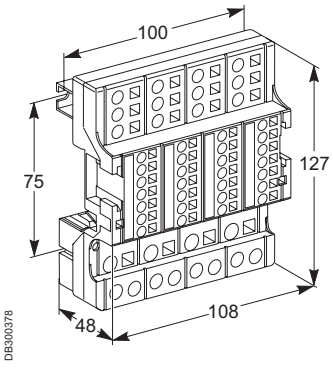

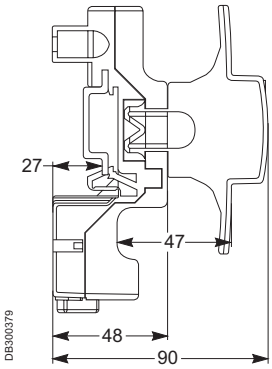

7

Power distribution
Busbars and blocks

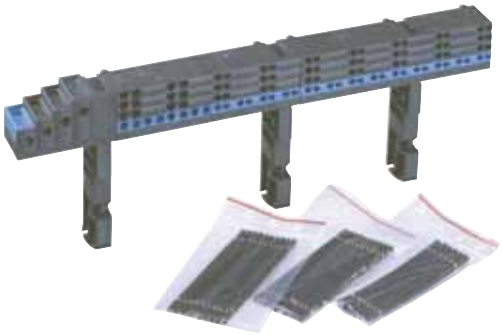
PB500926

Multiclip distribution block

- Distribution in a full row (48 steps) of modular switchgear. Generally supplied on a busbar.
- The outlets are connected by the front, without screws on the spring terminals. The contact pressure of the cable is independent from the operator.
- It adapts automatically to the cross-section of the conductor (min. cross-section 1 mm^2).
- Each spring only accepts one flexible cable at a time.
- Degree of protection: IPxxB (protection against direct contacts).
- Installation: clipped onto the rear of a modular rail, for example Ref. 03004, or screwed on mounting plates (see page **7/10**).
- Electrical characteristics:

– Rated insulation voltage: Ui = 750 V.
– Rated impulse withstand voltage: Uimp = 8 kV.
– Resistance to short-circuit currents: the interrupting capacity reinforced by filiation is conserved in the case of automatic switch associations.
– 200 A Multiclip:
  • 10 mm^2 cable outlet: Imax = 50 A.
  • 2 different outlets with cables of 10 mm^2: Imax = 63 A.

- Distribution:

– For 2-pole 200 A Multiclip (04012):
  • 12 phase and neutral connection points.
– For 3-pole and 4-pole 200 A Multiclip (04013 and 04014):
  • 12 connection points for each phase.
  • 18 connection points for the neutral.

Supply: Multiclip distribution block, 10 mm^2 bared copper connections with a length of 100 mm, 2 bags of 12 connections, terminal covers for the supply poles (IPxxB), screws for the supply poles and fixing elements.

Model	Reference
200 A 2-pole	**04012**
200 A 3-pole	**04013**
200 A 4-pole	**04014**

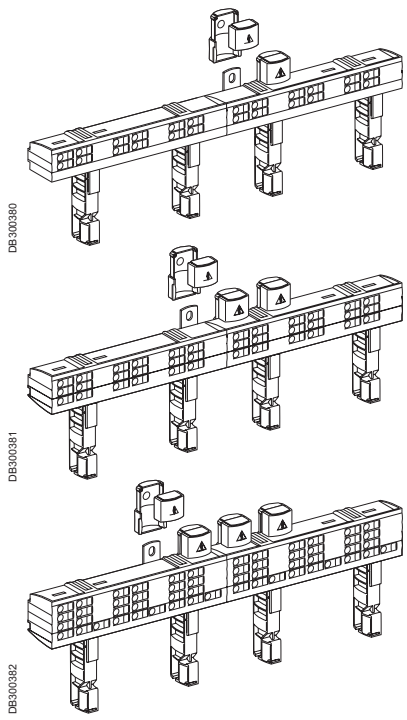
DB300380

DB300381

DB300382

Power distribution
Busbar support accessories

For ranges SF


PB500927

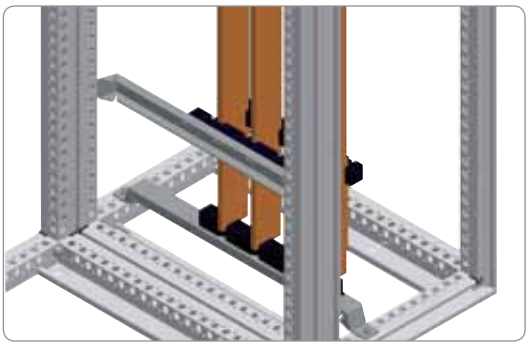
PB500073

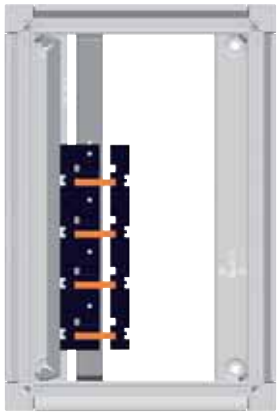
PB500928

Vertical bar support up to 3200 A

- Support prepared for fixing bars in vertical position, mounted directly on the structure of the enclosure. Adjustable height with a pitch of 25 mm.
- Maximum nominal rating:
  – 1600 A for 5 mm bars.
  – 3200 A for 10 mm bars.
- The number and the distance between supports, according to the nominal current and the short-circuit current, are stated in the enclosed table.

Supply: two insulating bar supports, one metal vertical support and fixing elements.

Nominal dimensions (mm) Width/Depth (B)	Reference
400	**NSYBVS400**
500	**NSYBVS500**
600	**NSYBVS600**
800	**NSYBVS800**

- The number and the distance between supports, according to the nominal current and the short-circuit current, are stated in the enclosed table.

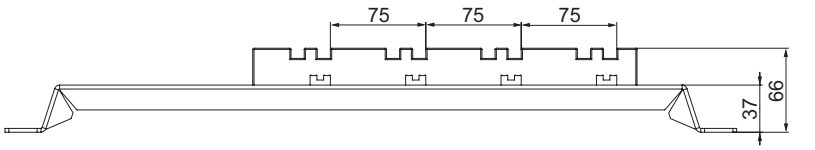

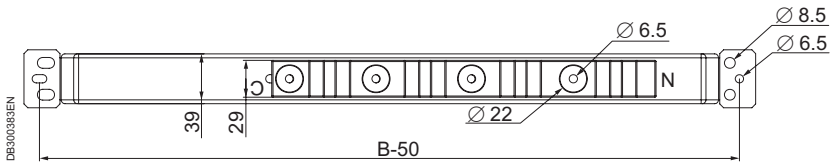

Sets of vertical bars			Maximum distance between bar supports (mm) according to the short-circuit current, Icw (kA)								
Nominal rating In (A)	Cross-section (mm)	No. of bars per phase	Icw (kA)								
			15	25	30	40	50	60	65	75	85
750	60 × 5	1	650	325	325	217	-	-	-	-	-
900	80 × 5	1	650	325	325	217	-	-	-	-	-
1250	60 × 5	2	650	325	325	217	163	-	-	-	-
1600	80 × 5	2	650	325	325	217	217	-	-	-	-
1080	50 × 10	1	650	650	650	325	217	217	-	-	-
1250	60 × 10	1	650	650	650	325	325	217	-	-	-
1600	80 × 10	1	650	650	650	325	325	217	-	-	-
1850	50 × 10	2	650	650	325	325	325	217	217	217	-
2000	60 × 10	2	650	650	650	325	325	325	217	217	-
2500	80 × 10	2	650	650	650	325	325	325	325	217	-
2800	100 × 10	2	650	650	650	650	325	325	325	217	163

Note: The current-carrying capacity values in the set of bars are given for an ambient temperature of 35 °C around the busbar.
The nominal rating values are indicated for IP55. The maximum values (3200 A) are achieved with ambient temperatures of less than 35 °C, varying according to the configuration and position of the busbar.
See enclosed table of current-carrying capacities according to temperature, page **7/95**.

Power distribution
Busbar support accessories

Selection of the number of supports

- The number and cross-section of the bars are chosen for each phase, according to the nominal rating.
- Determine the short-circuit current Icw (kA) and use the table to obtain the maximum distance between supports.
- Based on the maximum distance between supports, obtain the number of supports to be installed according to the following criterion:

– Three vertical supports must necessarily be fixed to the structure (ref. **NSYBVS**...).
– If more than three supports are required, the support arms must be used (ref. **NSYBSA**), in even numbers (2, 4, etc.).

- Example:
  In: 2000 A, two 60 × 10 bars are required per phase.
  Icw: 50 kA.
  According to the table of maximum distance between supports they must be 325 mm.
  Length of the copper bars: 1800 mm.
  1700/325 = 5.23, which means 6 supports, 3 fixed vertical supports and 3 support arms + 1 extra support for the number to be even.

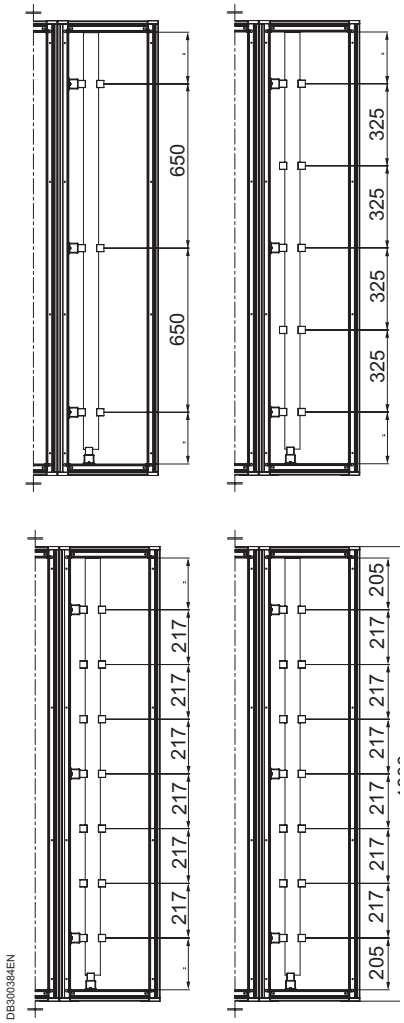

Power distribution
Busbar support accessories


PB500929

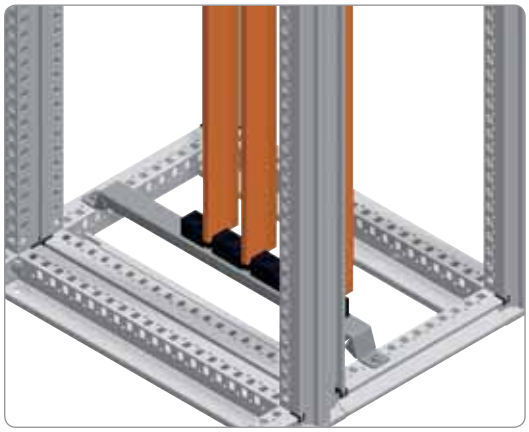
PB500930

For ranges SF

Setting support

- Bottom support for bars in vertical position.
- It is fixed to the bottom frame of the enclosure.
- It is required for supporting the bars.
- It is not considered a bar support when calculating the number of supports.

Supply: one insulating bar support, one metal vertical support and fixing elements.

Nominal dimensions (mm) Width/Depth	Reference
400	**NSYAS400**
500	**NSYAS500**
600	**NSYAS600**
800	**NSYAS800**

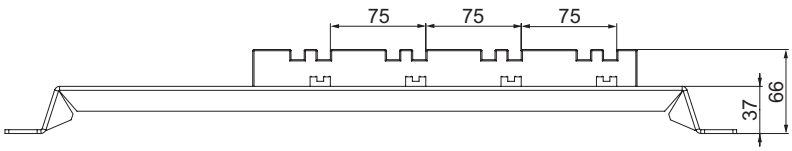

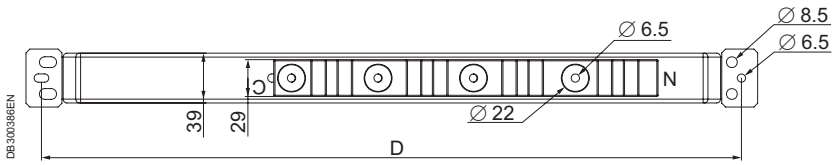

7

Power distribution
Busbar support accessories


PB500931

For ranges SF, SFX

Horizontal bar support up to 3200 A

- Support prepared for fixing bars in horizontal position.
- Direct mounting to the structure of the enclosure, on the vertical uprights, at any height, adjustable with a pitch of 25 mm.
- Maximum nominal rating:
  – 1600 A for 5 mm bars.
  – 3200 A for 10 mm bars.
- The number and the distance between supports, according to the nominal and short-circuit current, are stated in the enclosed table.

Supply: two insulating bar supports, one metal horizontal support and fixing elements.

Nominal dimensions (mm) Width/Depth (B)	Reference
500	**NSYBHS500**
600	**NSYBHS600**
800	**NSYBHS800**

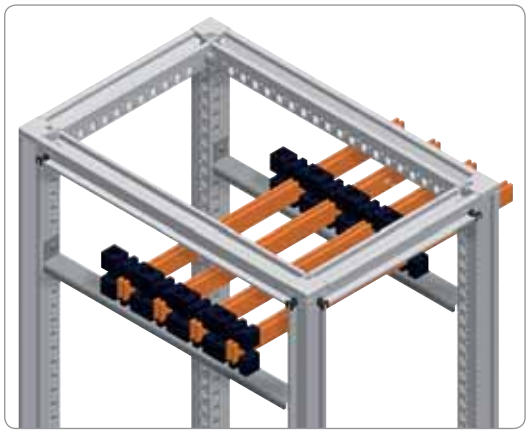
PB500932

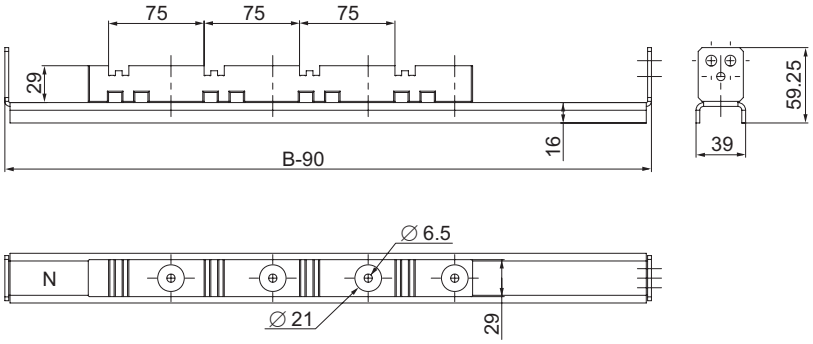

Sets of vertical bars			Maximum distance between bar supports (mm) according to the short-circuit current Icw (kA)								
Nominal rating In (A)	Cross-section (mm)	No. of bars per phase	15	25	30	40	50	60	65	75	85
750	60 × 5	1	650	325	325	217	-	-	-	-	-
900	80 × 5	1	650	325	325	217	-	-	-	-	-
1250	60 × 5	2	650	325	325	217	163	163	130	108	81
1600	80 × 5	2	650	325	325	217	217	163	130	108	81
1080	50 × 10	1	650	650	650	325	217	217	163	-	-
1250	60 × 10	1	650	650	650	325	325	217	163	130	108
1600	80 × 10	1	650	650	650	325	325	217	163	130	108
1850	50 × 10	2	650	650	325	325	325	217	217	217	163
2000	60 × 10	2	650	650	650	325	325	325	217	217	163
2500	80 × 10	2	650	650	650	325	325	325	325	217	163
2800	100 × 10	2	650	650	650	650	325	325	325	217	163

Note: The current-carrying capacity values in the set of bars are given for an ambient temperature of 35 °C around the busbar.
The nominal rating values are indicated for IP55. The maximum values (3200 A) are achieved with ambient temperatures of less than 35 °C, varying according to the configuration and position of the busbar.
See enclosed table of current-carrying capacities according to temperature, page **7/95**.

Power distribution
Busbar support accessories

For ranges SF, SFX

Selection of the number of supports

- The number and cross-section of the bars are chosen for each phase, according to the nominal rating.
- Determine the short-circuit current Icw (kA) and use the table to obtain the maximum distance between supports.
- Based on the maximum distance between supports, obtain the number of supports to be installed according to the following criterion:

– Two supports must necessarily be fixed to the structure per enclosure. In the event of enclosure suites, only one support is required, fixed to one of the uprights of the coupling.

– If more than two supports are required per enclosure, the support arms must be used (ref. **NSYBSA**).

Table of current-carrying capacities according to temperature

Type of bars		Current-carrying capacity (A) according to the ambient temperature around the frame				
Cross-section (mm)	No. of bars per phase	25 °C	30 °C	35 °C	40 °C	45 °C
60 × 5	1	840	790	750	700	650
80 × 5	1	1050	990	900	870	810
60 × 5	2	1420	1350	1250	1180	1090
80 × 5	2	1820	1720	1600	1510	1390
50 × 10	1	1220	1160	1080	1010	940
60 × 10	1	1400	1320	1250	1160	1070
80 × 10	1	1800	1700	1600	1500	1390
50 × 10	2	2090	1980	1850	1740	1610
60 × 10	2	2270	2140	2000	1870	1720
80 × 10	2	2820	2660	2500	2330	2160
100 × 10	2	3200	3100	2800	2720	2510

Note: The rating values according to temperature are not exhaustive, since they depend on the configuration and position of the bars inside the enclosure.



PB500933

Bar support arm

- Support without fixing to the enclosure, required to guarantee the distance between the bars.
- It is used on bars in both vertical and horizontal position.
- To choose the number of supports, see the tables of maximum distances between supports, pages **7/86**, **7/91** and **7/94**.

Supply: two insulating bar supports and fixing elements.

Reference
NSYBSA

Power distribution
Distribution blocks


PB500934

Sigma safety terminals

Safety terminals made from self-extinguishing Polyamide-6, with matt black base, **MS-58** brass terminal (DIN 17660), tempered, zinc-plated and dichromated steel ring, and cover made from orange-coloured self-extinguishing polypropylene.

- Anti-shearing: the connection is made by means of a tightening mechanism, which distributes the pressure across the entire contact surface, avoiding friction and occasional stress that can damage the conductors.
- Unloosenable: the ring that surrounds the brass body guarantees that the pressure exerted by the actual conductors cannot open the terminal and loosen the connection.
- Full insulation: all the SIGMA "S" terminals are supplied with a terminal-covering cap, avoiding any accidental contact with live parts.

All the gauges can be coupled together, forming strips of any length. Operating voltage: 500 V.

Section (mm²)	A	B	C	D	E	Supply	Reference
1 × 4	30	20	13	21	4	20	**NSYS04**
1 × 6	33	25	16	24	7	20	**NSYS06**
1 × 10	38	28	16	28	6	20	**NSYS10**
1 × 16	42	32	19	32	9	20	**NSYS16**
1 × 35	46	38	23	34	11	20	**NSYS2535**
1 × 50	52	45	27	40	15	20	**NSYS50**
1 × 70	55	50	30	40	15	20	**NSYS70**
1 × 100	58	54	33	40	20	10	**NSYS95100**

Note: Each terminal accepts up to 2 conductors with the specified section.

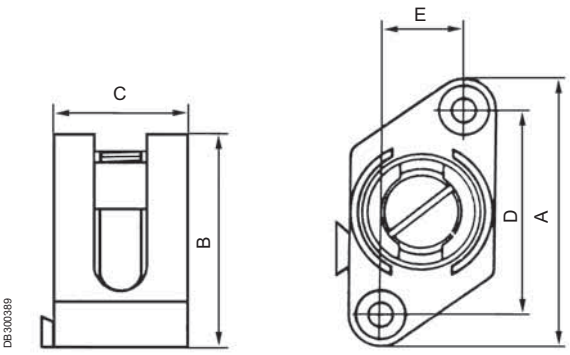

DB300389

Power distribution
Distribution blocks



PB500935

Bimetal terminals

Terminals specially designed for the junction of cables on plates, their main application is in busbar connections.
The bimetal terminals are made from a copper alloy, hot-stamped and tin plated, suitable for connecting a copper or aluminium conductor indistinctly (bimetal).

Supply: 4 bimetal terminals.

Main section (mm^2)	Junction section (mm^2)	Reference
6-50	-	**NSYBBH29**
6-50	-	**NSYBBH29C**
10-95	-	**NSYBBH30**
16-150	-	**NSYBBH31**
50-240	-	**NSYBBH32**
6-50	6-50	**NSYBBH29D**
6-50	6-50	**NSYBBH29DC**
10-95	10-95	**NSYBBH30D**
25-150	16-150	**NSYBBH31D**
95-240	5-240	**NSYBBH32D**
6-50	-	**NSYBBH29P**
6-50	-	**NSYBBH29PC**
6-50	6-50	**NSYBBH29DP**
6-50	6-50	**NSYBBH29DPC**

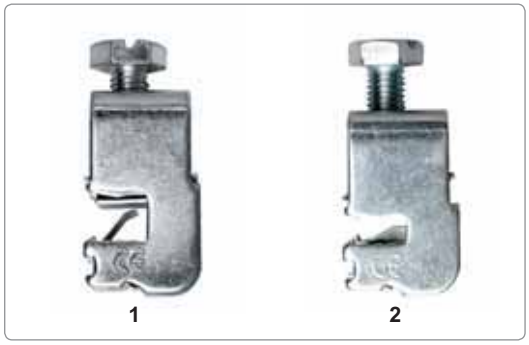

PB500936

Plate/cable terminals

Entry by plate and junction by cable, plate or terminal.

Supply: 1 junction terminal.

Junction cable-section (mm^2)	Plate thick-ness (mm)	Fig.	Reference
1.5 to 16	5	2	**NSYBPCH516**
1.5 to 50	5	2	**NSYBPCH550**
16 to 120	5	2	**NSYBPCH5120**
1.5 to 16	10	1	**NSYBPCH1016**
1.5 to 50	10	1	**NSYBPCH1050**
16 to 120	10	1	**NSYBPCH10120**

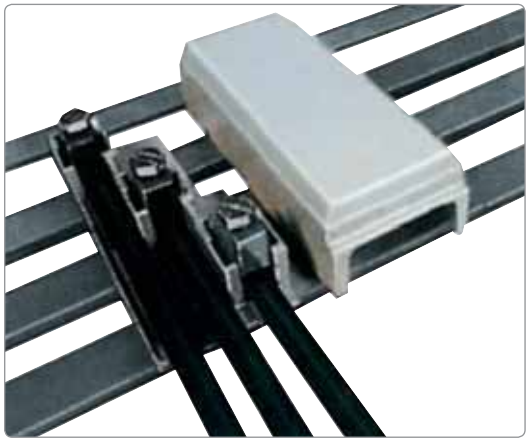

PB500937

Three-pole junction terminals

Entry by plate and junction by cable (for busbars).

Supply: 1 junction terminal.

Entry plate width (mm)	Entry plate thickness (mm)	Junction cable section (mm^2)	Reference
12/15/20/25/30	5 to 10	35 to 120	**NSYBTE630TBT**

7

Power distribution
Distribution blocks

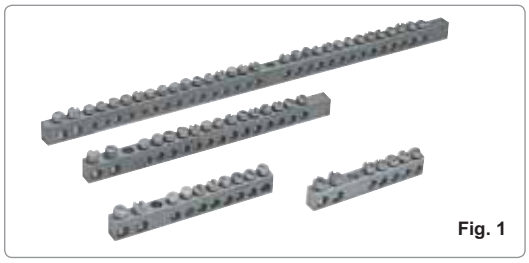
PB500938

Fig. 1

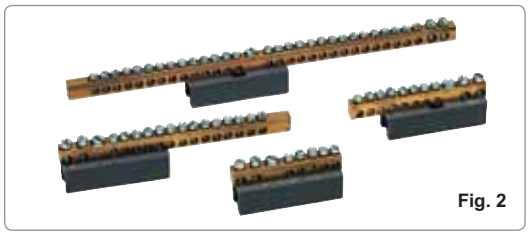
PB500939

Fig. 2


PB500891

Fig. 2

Earthing strips

For the junction of neutral and earth cables.
- Models **NSYRBL** (Fig. 1) for installation in boxes with insulating rear or by means of insulators, not supplied.
- Models **NSYRBLZ** (Fig. 2) with insulating plinth for fitting under pressure on 12 × 2-mm rail.

Supply: 10 earthing strips

Number of terminals × section mm²	Fig.	Reference
2 × 16 mm² + 5 × 6 mm²	1	**NSYRBL21656M**
2 × 16 mm² + 8 × 6 mm²	1	**NSYRBL21686M**
2 × 16 mm² + 14 × 6 mm²	1	**NSYRBL216146M**
2 × 16 mm² + 29 × 6 mm²	1	**NSYRBL216296M**
2 × 16 mm² + 5 × 6 mm²	2	**NSYRBLZ21656**
2 × 16 mm² + 8 × 6 mm²	2	**NSYRBLZ21686**
2 × 16 mm² + 14 × 6 mm²	2	**NSYRBLZ216146**
2 × 16 mm² + 29 × 6 mm²	2	**NSYRBLZ216296**

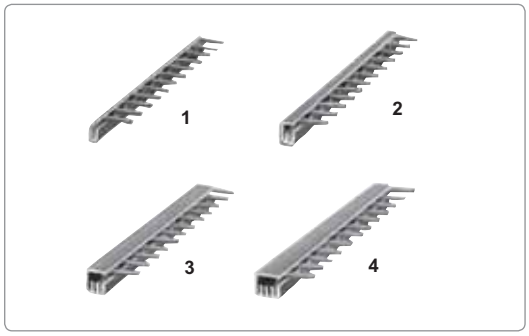

PB500940

Distribution boards

For distribution in a single row of circuit breakers with a total of 12 modules.

Supply: 10 distribution boards.

N.° of bars	N.° of poles per bar	Fig. n.°	Reference
1	12	1	**NSYBDS112**
2	6	2	**NSYBDS26**
3	4	3	**NSYBDS34**
4	3	4	**NSYBDS43**

Accessories

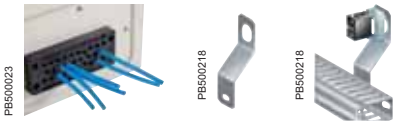

Cable management 7/100

FL21-type membranes 7/103

IP 65 connector free cable entries system 7/104

Cable entries system with connectors 7/107

Cable entries 7/108

PVC cable entries 7/111

Neoprene adjustable cone-shaped entries 7/112

Plugs/Protection rings 7/113

Cable guides 7/114

L-rail for fixing cables 7/115

Plastic cable support 7/116

Door cable-guide 7/116

Adjustable cable ties 7/117

Captive clips 7/117

Cable-tie fixing support 7/118

Self-adhesive support bases 7/118

Corrugated cable-gland tube and fixing support 7/119

Cable-gland for body/door 7/120

Cable-duct and cover 7/121

Cable-duct support 7/122

Plastic foot for cable-duct support 7/123

Label frame 7/123

Insulated-head screw 7/123

Lyre-shaped clamps 7/124

Steel wired cable tray 7/124

Cable management


PB500368

Minimum size and a high assembly:

Choice

Multiple solutions that can be combined on a single cable-entry plate (machining possible at the plant) or directly on the enclosure. See our customised offer.

- IP 67 ISO cable-glands: for quick installation without tools.
- IP 67 cable-glands.
- IP 65 membranes for quick cable entries with FL21-type cut-out.
- IP 65 plate for quick cable entries with the following types of cut-outs: Harting or circular M50 and M63.
- IP 65 plate for cable entries equipped with Harting-type cut-outs and connectors.

Saves time:
IP 65 membranes for quick cable entries with FL21-type cut-out.

Service:
Direct machining of the cut-out on the body of the enclosure.

Development of the installation:
IP 65 plate for quick cable entries with the following types of cut-outs: Harting or circular M50 and M63.

Smart:
IP 54 plate for cable entries equipped with Harting-type cut-out connectors.

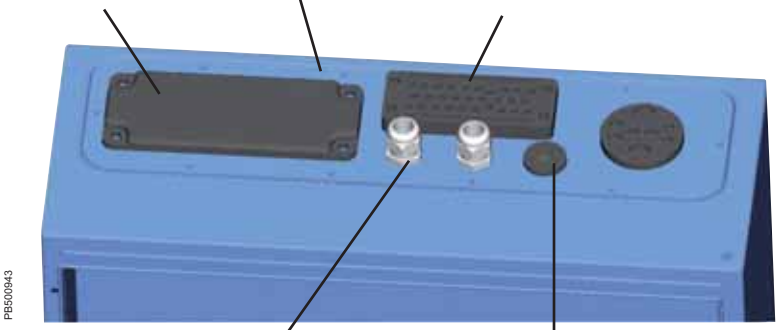
PB500943

Practical:
IP 67 cable-glands.

Simple:
IP 67 ISO cable-glands: for quick installation without tools.

Example of installation on cable-entry plate.


PB500359

Machining of your plate before painting, with our specific service.

Specific

Cable management

PB500944



FL21 insulated flange with ISO knock-outs (for cable gland with nut)

1 model (4 × 12 + 4 × 12/20 + 4 × 16/25) colour RAL 7035.

Installation on knock-out cable-gland plates (FL21 models) or direct installations on the enclosures with our specific offer. Please consult us.

- Material: polycarbonate, glass-fiber reinforced.
- Flame resistance: UL94 – V1.
- Temperature range for normal operation: –40 ... +80 °C.
- Temperature range for a short time: –40 ... +120 °C.

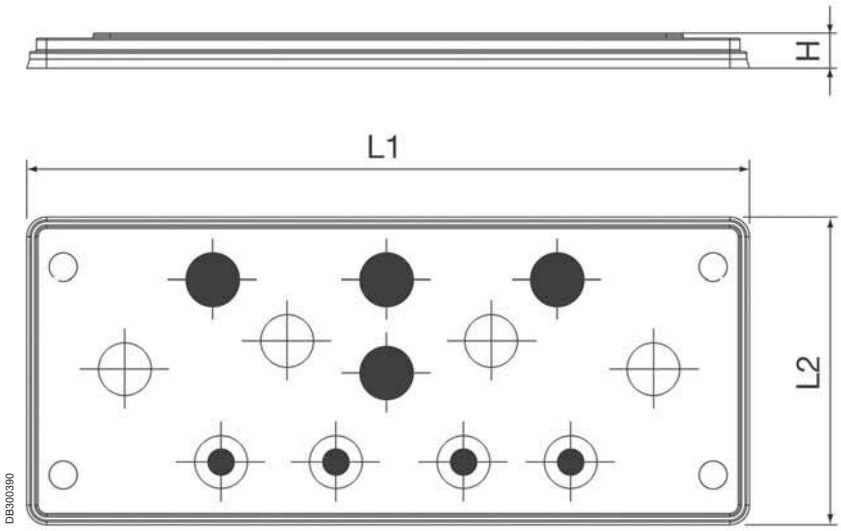

DB300390

Size	L1 (mm)	L2 (mm)	H (mm)	H2 (mm)	Reference
FL21	215	85	10	~ 35	**NSYTSAKFL**

	M12
	M12 or M20
	M16 or M25

Cable management


PB500945


PB500946

Example of mounting with direct cable entry (through pop-out membranes) or mounting of cable gland.

FL13 or 21 pre-configured flanges

4 models: one FL13 and three FL21, RAL 7035 colour.

Installation on knock-out cable-gland plates or direct installation on the enclosures with our specific offer. Please consult us.

- Material: Fibreglass-reinforced polypropylene and TPE - Halogen Free.
- Certificates: UL-approved materials.
- Fire resistance: UL94 HB.
- Degree of protection: IP 65.
- Temperature range: –20 °C to +125 °C(1).

Test standard EN 60529:1991 + A1 EN 60670-1:2005, EN 50262:1998
EMKO-TUI(03-SEC)FI001/84.
Semko report 816003.

FL	4-10 mm(1)	M20 (6-13 mm)(2)	Ref.
13	10	1	**NSYAECPKFL11**

(1) "Pop-out" membranes only.
(2) "Pop-out" membranes or cable gland installation.

FL	M16 (5-10 mm)(3)	M20 (6-13 mm)(3)	M25 (8-17 mm)(3)	M32 or M40 or M50(4)	Ref.
21	2	2	2	1	**NSYAECPKFL7A**
21		6		1	**NSYAECPKFL7B**
21	4	2	4		**NSYAECPKFL10**

(3) "Pop-out" membranes or cable gland installation.
(4) Knock out system.

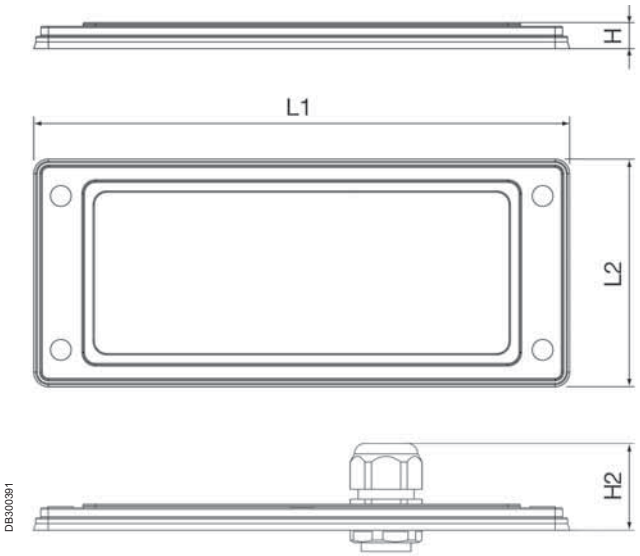

DB300381

Cable gland

Size	L1 (mm)	L2 (mm)	H (mm)	H2 (mm)
FL13	134	52	6.5	~ 35
FL21	214	90	9	~ 35

See also the accessories


PB500947

Adjustable cable tie page **7/115**

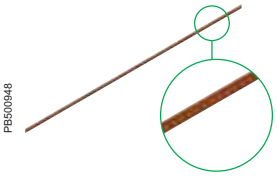
PB500948

Cable management page **7/141**

Cable management
Cable entries

FL21-type membranes for IP 65 cable-entry plate

Number of cable entries	Diameter of the cable entry (∅ mm)										Reference
	5-7	6-10	8-12	8-16	10-14	12-18	14-20	17-32	20-26	24-54	30-60	
0												**NSYAECPFLBP***
7				4						2	1	**NSYAECPFLT7**
25	4		4		12		4		1			**NSYAECPFLT25**
35		2	14		16	2		1				**NSYAECPFLT35**

* Metallic plate.



PB500605



PB500606

Sealed cable entries made from insulating material (fire resistance: V0 according to UL 94).

- Guarantees a degree of protection of IP 65.
- Dark grey colour.
- Installation on pre-cut plates (page **2/65)** or direct installation on the enclosures with our specific offer. Please consult us.
- 3 models: 7 to 35 cable entries.
- Cover for cut-out ref. **NSYAECPFLBP**.

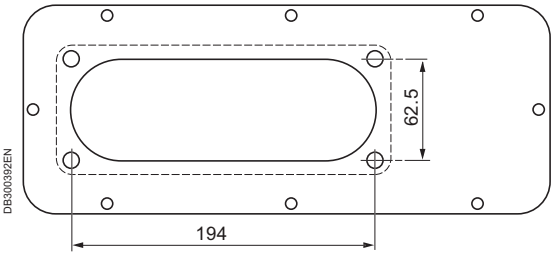

DB300392EN

Features of the membranes

NSYAECPFLT7

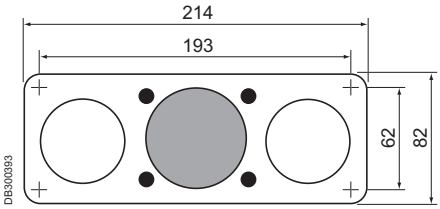

DB300393

Symbol	For cable ∅	No. of entries
●	8-16	4
○	24-54	2
◉	30-60	1

NSYAECPFLT25

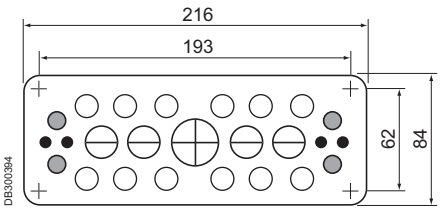

DB300394

Symbol	For cable ∅	No. of entries
●	5-7	4
◉	8-12	4
○	10-14	12
⊖	14-20	4
⊕	20-26	1

NSYAECPFLT35

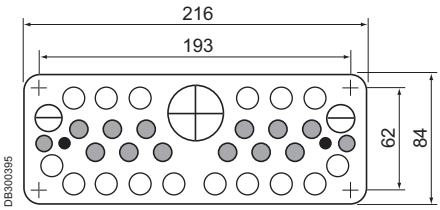

DB300395

Symbol	For cable ∅	No. of entries
●	6-10	2
◉	8-12	14
○	10-14	16
⊖	12-18	2
⊕	17-32	1

Cable management
Cable entries


PB500024

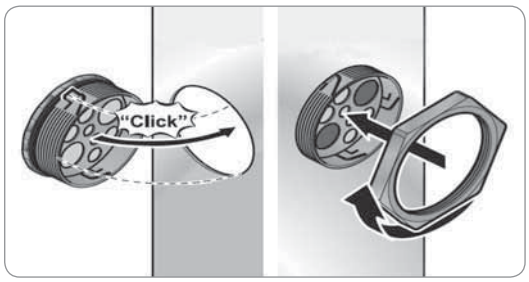

DB300396

IP 65 connector-free cable entries: Two solutions to suit your application

Circular

Compact, flexible system for inserting cables in electrical enclosures or connection boxes, for example:

Specifications
- IP 65 tightness.
- Fire resistance: V0.
- Cut-outs ∅ 50 and 63 mm.
- Installation by nut, up to Spacial wall-mounting steel enclosure size 700 × 500 × 250 mm.
- 2 installation methods are possible for sizes larger than 700 × 500 × 250 mm: clipping or screwing (installation by screwing recommended).

Composition: 10 units.

Reference by unit. Order by multiples of 10 (10, 20, 30...).



DB300397

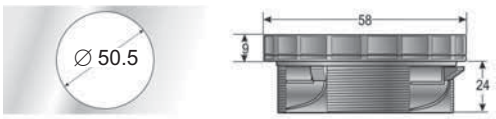

DB300398


PB500023

Rectangular

Compact, flexible system for inserting cables in electrical enclosures or connection boxes, for example:
- External dimensions: 146 × 14 × 58 mm.
- Drill-hole diameter: 112 × 36 mm.

Specifications
- IP 65 tightness.
- Fire resistance: V0.
- Identical cut-outs to the 24-point connectors.
- Installation by screwing, up to Spacial wall-mounting steel enclosure size 700 × 500 × 250 mm.
- 2 installation methods are possible for sizes larger than 700 × 500 × 250 mm: clipping or screwing (installation by screwing recommended).

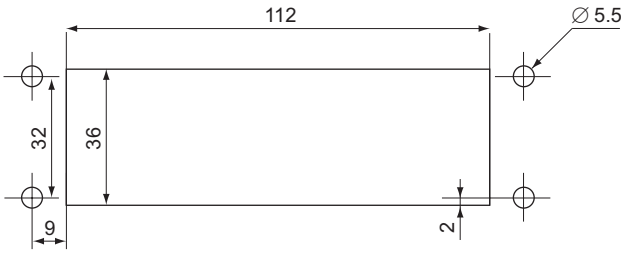

DB300399EN

Cable management
Cable entries

Selection guide

Type	No. of openings	Dimensions/ cut-out Ø	Diameter of the cable entry (Ø mm)								Packaging	Reference
			3-5.5	4.3-8.1	3-6.5	3.6-6.5	5-9.2	6-10	8-12.5	9.6-15.9		
 PB500024	4	50.5						3		1	10	**NSYTSAM504SE**
	8	50.5				7		1			10	**NSYTSAM508SE**
	8	63.5			2		4			2	10	**NSYTSAM638SE**
	13	63.5	6			6		1			10	**NSYTSAM6313SE**
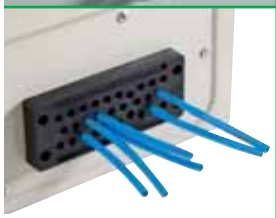 PB500023	14	112 × 36			6		4				1	**NSYTSA2414SE**
	17	112 × 36					17			4	1	**NSYTSA2417SE**
	22	112 × 36			16		4		2		1	**NSYTSA2422SE**
	23	112 × 36		23							1	**NSYTSA2423SE**
	29	112 × 36			29						1	**NSYTSA2429SE**

Position of the holes on the circular cable entries with diameters 50 and 63 mm

Type	Hole diameter	Reference
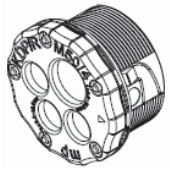 DB300400	1 × Ø 9.6 to 15.9 mm 3 × Ø 6 to 10 mm	**NSYTSAM504SE**
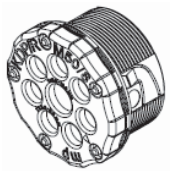 DB300401	7 × Ø 6 to 10 mm 1 × Ø 6 to 10 mm	**NSYTSAM508SE**
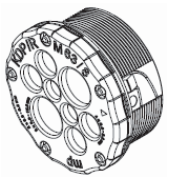 DB300402	2 × Ø 3 to 6.5 mm 4 × Ø 5 to 9.2 mm 2 × Ø 9.6 to 15.9 mm	**NSYTSAM638SE**
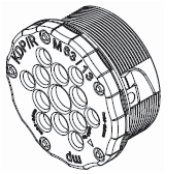 DB300403	6 × Ø 3 to 5.5 mm 6 × Ø 3.6 to 6.5 mm 1 × Ø 6.0 to 10.0 mm	**NSYTSAM6313SE**

Cable management
Cable entries


PB500023

Diagrams of dimensions and positions of the holes on a rectangular cable entry

Cable entries (mm)	Type	Reference
6 × 3 to 6.5 4 × 5 to 9.2 4 × 9.6 to 15.9	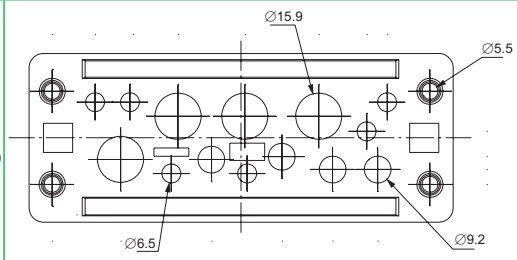 DB300404EN	NSYTSA2414SE
17 × 9.2	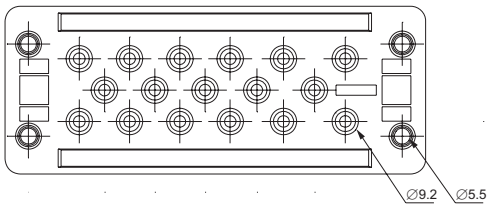 DB300405EN	NSYTSA2417SE
29 × 3 to 6.5	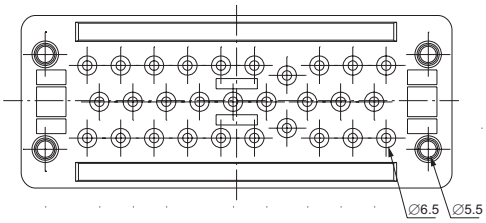 DB300406EN	NSYTSA2429SE
16 × 3 to 6.5 4 × 5 to 9.2 2 × 8 to 12.5	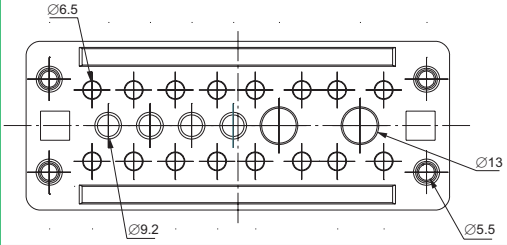 DB300407EN	NSYTSA2422SE
23 × 4.3 to 8.1	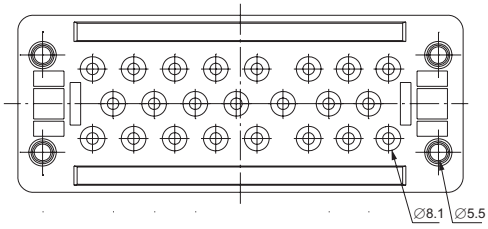 DB300408EN	NSYTSA2423SE

See also the accessories


PB500947

Adjustable cable tie
page **7/115**

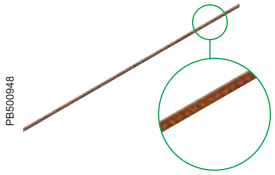
PB500948

Cable management
page **7/141**

Cable management


PB500949

NSYDCE240

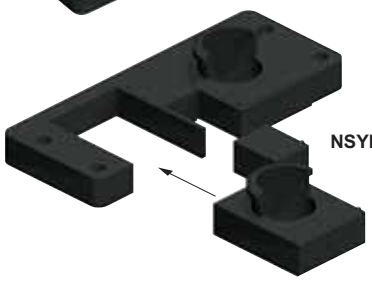
PB500950

NSYDCE244

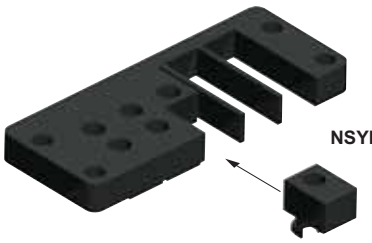
PB500951

NSYDCE2410


PB500106

Example of installation on cable-entry plate.


PB500952

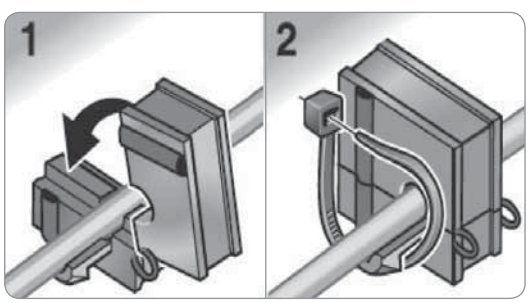

DB300410

Adjustable cable tie see on page **7/121**.

Die for entry of cables equipped with connectors

System in two parts for inserting cables and hoses in the boxes.
- Various split seals suited to the cable diameter.

Specifications

- IP 54 tightness.
- Identical cut-outs to the 16-point or 24-point connectors.
- Installation by screwing, up to Spacial steel enclosure size 700 × 500 × 250 mm.

Composition: 1 die and fixing elements.

Connector cut-out type	Number of cable entries	Reference
16	8	**NSYDCE168**
24	0	**NSYDCE240**
24	4	**NSYDCE244***
24	10	**NSYDCE2410**

* Large seal.

Cut-out for reference NSYDCE24•••

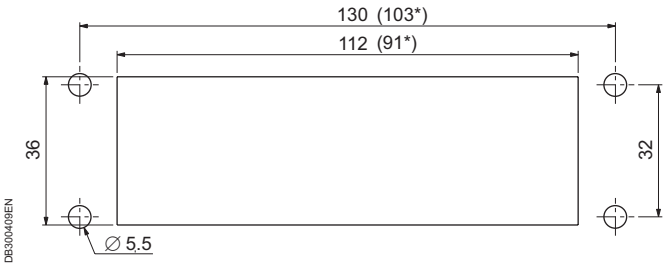

DB300409EN

*Cut-out for reference **NSYDCE16•••**.

Split seals for cable entries equipped with connectors

Split seals suited to the diameter of the cable to be mounted on the cable-entry dies for the connectors. Ref. **NSYDCE•••**.

Composition: 10 units.
Reference per unit. To be ordered in multiples of 10 (10, 20, 30, etc.).

For cables Ø (mm)*	Reference
0	**NSYCEJD**
3-4	**NSYCEJD3**
5-6	**NSYCEJD5**
7-8	**NSYCEJD7**
9-10	**NSYCEJD9**
11-12	**NSYCEJD11**
13-14	**NSYCEJD13**
16-17	**NSYCEJD16***
18-19	**NSYCEJD18***
20-21	**NSYCEJD20***
22-23	**NSYCEJD22***
24-25	**NSYCEJD24***
26-27	**NSYCEJD26***
28-29	**NSYCEJD28***
30-31	**NSYCEJD30***

* Large seal, 24/4 die only.

Cable management
Cable entries

	Description	Diameter	Details	See also the accessories
PB500266 	Stepped mixed end pieces for IP 55 direct cable entries	For cables Diameter 23 Diameter 29 Diameter 36 Diameter 44	Page **7/109**	Door cable-guide cross-rail Page **7/116**
PB500267 	IP 67 quick cable entries	M12 M16 M20 M25 M32 M40 M50	Page **7/109**	Adjustable cable ties Page **7/117**
PB500099 	ISO cable-gland	M12 M16 M20 M25 M32 M40	Page **7/110**	Self-adhesive bases Page **7/118**
PB500605 	IP 65 membranes	For cables with diameters from 8 to 60 mm	Page **7/103**	Fixing lugs for the earthing strip Page **7/29**
PB500024 	IP 65 circular cable entries Entries from 3 mm to 14 mm	2 sizes: M50 and M63	Page **7/104**	Plastic cable tie fixing support Page **7/117**
PB500023 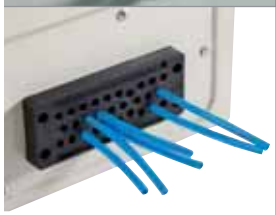	IP 65 cable entries without connectors. Entries from 3 mm to 6.5 mm	Dimensions 112 × 36	Page **7/104**	Covered cable ducts Page **7/121**
PB500952 	Plates for cable entries with IP 54 connectors	91 × 36 112 × 36	Page **7/107**	Duct support Page **7/122**

Cable management
Cable entries

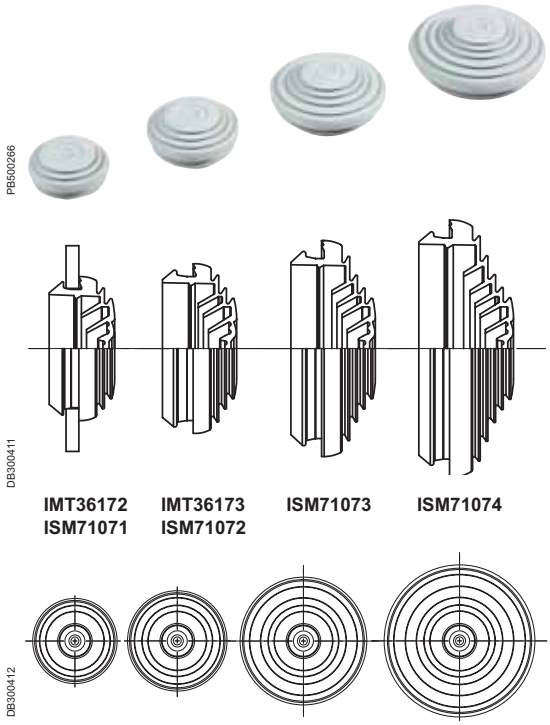

Mixed membrane entries for IP 55 direct cable entries

Common accessories for the Thalassa and Spacial offers

- Membrane entries with multiple membranes.
- IP 55.
- RAL 7035.
- Patented concentric cutting. A simple screwdriver is enough. Enables ultra-quick connection with the choice of several cable diameters for the same membrane entry.
- Material: SBS.
- Minor packaging of 10 pieces.
- Warning: The IP becomes 55.
- Suitable for walls from 2 to 3.2 mm.

∅ (mm)		Minor pack.	References and colours	
Drill hole	Cable / conduit		RAL 9010 white	RAL 7035 light grey
23	4 - 20	10	**IMT36172**	**ISM71071**
29	4 - 25	10	**IMT36173**	**ISM71072**
36	4 - 32	10	-	**ISM71073**
44	4 - 40	10	-	**ISM71074**

Installation of IP 55 entries

- Insertion of rigid cables:
– Strip at least 100 mm.
– Push the wires through the membrane.
- Insertion of flexible cables:
- Pierce partially and soften the membrane with a 4 to 5.5 mm screwdriver.
– Pass the cable through the membrane.
- Insertion of conduits:
– Peel the necessary step: 16, 20, 25, 32 or 40 mm.
– Push the conduit.

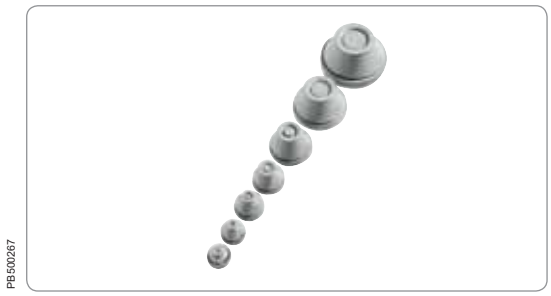

IP 67 quick cable entries

- IP 67.
- Material: EPDM plastic.
- Suitable for walls from 1 to 4 mm (0.5 to 2 mm for ref. **IMT36179**).
- Quick installation with no tools.
- Installation direction: the conical part is inside the box.

ISO	∅ of drill hole	Cable ∅ (mm)	Minor pack.	Reference
M12	12.5	3 - 5	50	**IMT36179**
M16	16	5 - 7	50	**IMT36180**
M20	20.3	7 - 10	50	**IMT36181**
M25	25.3	10 - 14	50	**IMT36182**
M32	32.4	14 - 20	50	**IMT36183**
M40	40.7	20 - 26	25	**IMT36184**
M50	50.7	26 - 35	25	**IMT36185**

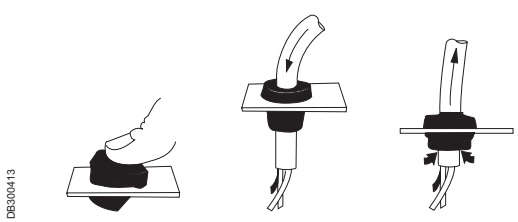

Application

- Push the cable entry into the hole. The conical part must be inserted into the box.
- Prepare and loosen the cable entry with a screwdriver. Pass the cable through the cable entry.
- Pull the cable back slightly to fix it in place. The installation is complete.

Cable management
Cable entries

Cable-gland, disc and plug selection table

Ø	1-cable cable gland			Multi-cable disc		Gasket	Blanking plug	Transport plug
	Ref.	Ø min / max (mm)	drill \ (2)	Ref.	Number / Ø (mm)			
M12	**ISM71501**	3 / 6.5	12.2 (0 + 0.2)	-	-	**IMT36151**	**IMT36161**	-
M16	**ISM71502**	4 / 8	16.2 (0 + 0.2)	**IMT36157**	2 × Ø 4	**IMT36152**	**IMT36162**	**IMT36167**
M20	**ISM71503**	6 / 12	20.2 (0 + 0.2)	**IMT36158**	3 × Ø 4	**IMT36153**	**IMT36163**	**IMT36168**
M20 (1)	**IMT36150**	6 / 12	20.2 (0 + 0.2)	**IMT36158**	3 × Ø 4	**IMT36153**	**IMT36163**	**IMT36168**
M25	**ISM71504**	11 / 17	25.2 (0 + 0.2)	**IMT36159**	4 × Ø 5	**IMT36154**	**IMT36164**	**IMT36169**
M32	**ISM71505**	15 / 21	32.2 (0 + 0.3)	**IMT36160**	6 × Ø 5	**IMT36155**	**IMT36165**	**IMT36170**
M40	**ISM71506**	19 / 28	40.5 (0 + 0.3)	-	-	**IMT36156**	**IMT36166**	**IMT36171**

(1) Cable-gland with high resistance to fire.
(2) In brackets: tolerance.



ISO cable-gland

Ø	Reference	TD	TL		Thread
M12	**ISM71501**	12	6	15	1.5
M16	**ISM71502**	16	8	19	1.5
M20	**ISM71503 - IMT36150**	20	10	24	1.5
M25	**ISM71504**	25	8	29	1.5
M32	**ISM71505**	32	10	36	1.5
M40	**ISM71506**	40	10	46	1.5

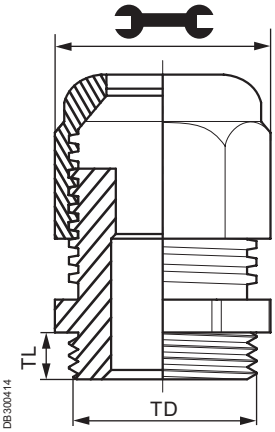

- IP 68, 5 bars.
- According to standard IEC 62208.
- RAL 7035 grey.
- Material: PA6, neoprene gasket.
- Usage temperature: – 30 ... + 80 °C up to + 150 °C intermittently.
- The cable-glands are supplied with nuts.
- The IP is guaranteed with no gasket between the cable-gland and the thermoplastic box. A gasket available as an accessory guarantees the seal in the event of installation on a steel enclosure.
- The cable-gland (ref. **IMT36150**) is especially recommended for security circuits (glow wire resistance: 960 °C).
- Pack of 20 (M12 to M20), 10 (M25 and M32), 5 (M40).



Multi-cable disc

Cable-gland gasket

- Batch of 100 (M12 to M25), 50 (M32), 25 (M40).

Multi-cable disc

- It is possible to pass several cables through a single cable-gland using the multi-cable bushing.



Blanking plug

Blanking plug

- It is screwed into the cable-gland's place.
- Pack of 20 plugs (M12 to M15), 10 plugs (M32), 5 plugs (M40).



Transport plug

Transport plug

- It is installed to block the cable-gland during transport or during maintenance operations.
- Pack of 20 plugs (M16 to M25), pack of 10 (M32), pack of 5 (M40).

Cable management
Cable entries



PVC adjustable cone-shaped entries

PVC insulating cone-shaped entries which can be cut according to the volume of cables. Installation on insulating distribution boxes and protection boxes; generally suitable for thicknesses matching the dimension E.

Fig.	Ø A	Ø B*	Ø C	Ø D	E	F	Capacity		Composition	Reference
							Cable Ø	Tube		
1	25	21.5	18	5	3.2	13	5 to 18	Pg. 9 to 11	50	**NSYECPC3**
1	33	29.5	26	5	3.2	20	5 to 26	Pg. 9 to 16	25	**NSYECPC5**
1	43	38.5	36	5	3.2	22	5 to 36	Pg. 9 to 21	25	**NSYECPC6**
2	70	63	60	28	3	20	28 to 60	Pg. 21 to 48	10	**NSYECPC9**
2	98	90	87	28	3	23	28 to 87	Pg. 21 to 48	10	**NSYECPC15**

*Drill-hole for mounting.

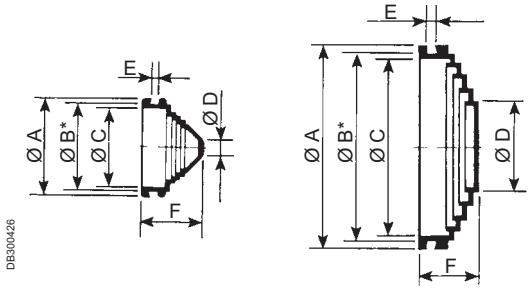



PVC adjustable cone-shaped entries

PVC insulating cone-shaped entries, threaded for the entry of Pg tubes and detachable rear for cable entry. They allow the entry of all types of normal and flexible cables and tubes, with diameters comprised between the dimension B and the thread root (maximum ∅).

Ø A	Ø B*	Ø C	Ø D	E	F	Capacity		Composition	Reference
						Cable Ø	Tube		
25	19.5	16	3	1.2	21	3 to 16	Pg. 9	50	**NSYEC1**
25	19.5	16	6	1.2	21	6 to 16	Pg. 11	50	**NSYEC2**
27	21.5	18	7	1.2	23	7 to 18	Pg. 13.5	50	**NSYEC3**
29.5	23.5	20	8	1.2	26	8 to 20	Pg. 16	25	**NSYEC4**
35	29.5	26	10	1.2	27	10 to 26	Pg. 21	25	**NSYEC5**
42	38.5	35	12	1.5	30	12 to 35	Pg. 29	25	**NSYEC6**
52	48.5	44	13	1.5	30	13 to 44	Pg. 36	25	**NSYEC7**

*Drill-hole for mounting.

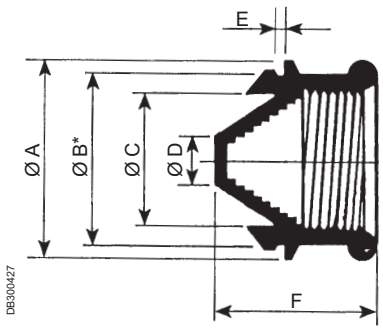

Cable management
Cable entries



Neoprene adjustable cone-shaped entries

Neoprene adjustable cone-shaped entries. This material has excellent mechanical, dielectric and thermal properties and can resist corrosive environments.

Composition: 25 units.

Reference by unit. Order by multiples of 25 (25, 50, 75...).

Ø A	Ø B*	Ø C	Ø D	E	F	Capacity		Composition	Reference
						Cable Ø	Tube		
24	19.5	14	8.6	1.75	20	8.6 to 14	-	50	**NSYECN1**
34	29.5	26	9	1.75	22	9 to 26	Pg. 9 to 16	25	**NSYECN5**
43	38.5	32	9	1.75	28	9 to 32	Pg. 9 to 21	25	**NSYECN6**
53	48.5	36	9	1.75	32	9 to 36	Pg. 9 to 29	25	**NSYECN7**
71	65	60	9.2	1.75	40	9.2 to 60	Pg. 9 to 48	10	**NSYECN10**

*Drill-hole for mounting.

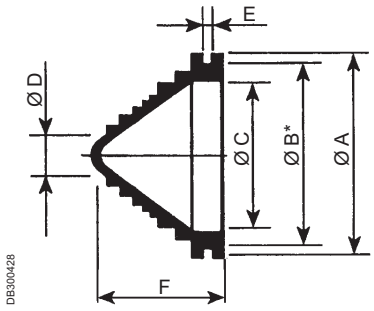

Cable management
Cable entries


PB500978

Plugs

Made from black PVC, they are suitable for all diameters of knock-out holes on the boxes.

Ø A	Ø B	Ø C	D	E	Composition	Reference
25.5	20	16.5	7	1.2	50	**NSYTC1**
27.5	22	19	7	1.2	50	**NSYTC2**
29.5	24	21	7	1.2	50	**NSYTC3**
36.5	29.5	27	7	1.5	25	**NSYTC4**
46.5	39	35	7.5	1.5	25	**NSYTC5**
56.5	49	45	7.5	1.5	25	**NSYTC6**

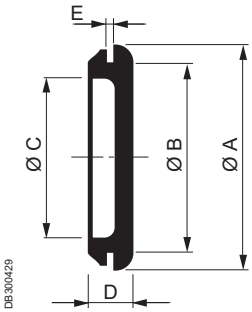

DB300429


PB500979

Protection rings

Protection rings for cables at the exit of the tubes. They are made from flexible, strong, light-grey PVC.

Composition: 100 units.

Reference by unit. Order by multiples of 100 (100, 200, 300...).

A	Ø B	Tube	Reference
15.2	12.7	Pg. 9	**NSYPC1**
18.6	16	Pg. 11	**NSYPC2**
20.4	17.8	Pg. 13.5	**NSYPC3**
22.5	19.8	Pg. 16	**NSYPC4**
28.3	25.3	Pg. 21	**NSYPC5**
37	33.6	Pg. 29	**NSYPC6**
47	43	Pg. 36	**NSYPC7**

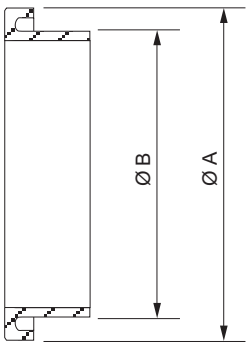

DB300430

Cable management
Cable holding

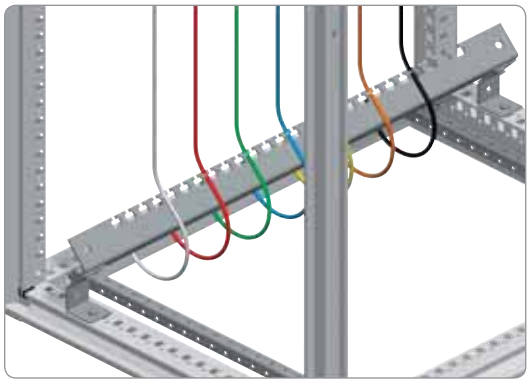
PB500968

For ranges
SF, SM, SFX, SMX

Lower cable-guide cross-rail

- It allows quick fixing of cables entering and exiting the enclosure.
- Depth adjustable every 25 mm.
- Spacial SF: for suitable enclosures with widths of 1200 and 1600 mm, use the adaptation kit for 2-door suitable enclosures, see page **7/19**.
- Spacial SM: for floor-standing enclosures with a width of 1200 mm, a top/bottom mounting rail installed in central position is required.
- Spacial SFX: no adaptation piece is required for the 1200 mm suitable enclosures.
- Spacial SMX: no adaptation piece is required for the 1600 mm floor-standing enclosures.
- Material: galvanised steel.

Composition: 1 cable-guide cross-rail and fixing elements.

Spacial dimensions (mm) Width (B)	Reference
600	**NSYCFP60**
800	**NSYCFP80**
1000	**NSYCFP100**
1200	2 × **NSYCFP60**
1600	2 × **NSYCFP80**

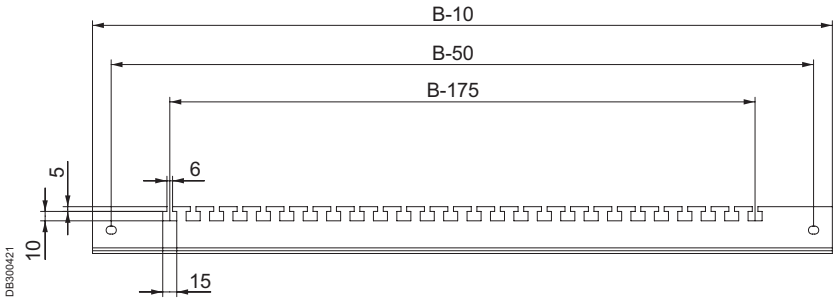

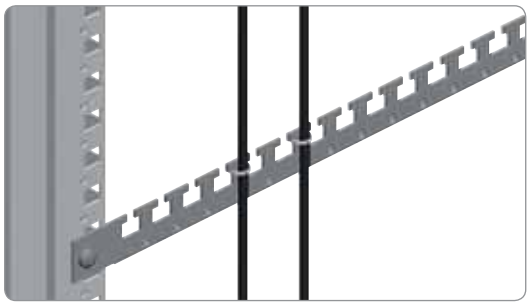
PB500969

Cable-guide cross-rails for framework

- Spacial SF and SFX: support for direct mounting on the framework, cross-rails or rails.
- Spacial SM: fixing on the bottom mounting rail, or on the floor-standing enclosure by means of adaptation rails and 40 mm universal cross-rails (1 row) in vertical position.
- Spacial SMX: fixing on the bottom mounting rail and 40 mm universal cross-rails (1 row) in vertical position.
- Support types:

– Angle support at 90°: for vertical cable fixing.
– Angle support at 120°: for fixing cables near the cable entry.

- Material: zinc-coated steel.

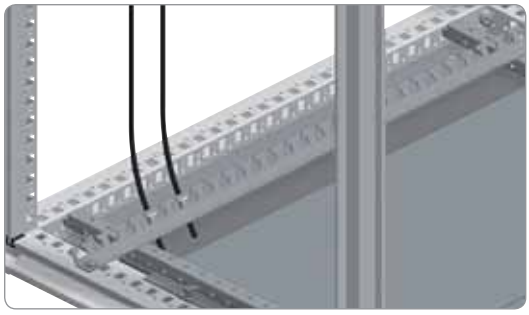
PB500970

For ranges
SF, SM, SFX, SMX

Composition: 2 supports and fixing elements.

Nominal dimensions (mm) Width / Depth (B / C)	Support angle	Reference
600	90°	**NSYCFS96**
	120°	**NSYCFS126**
800	90°	**NSYCFS98**
	120°	**NSYCFS128**

Cable management
Cable holding

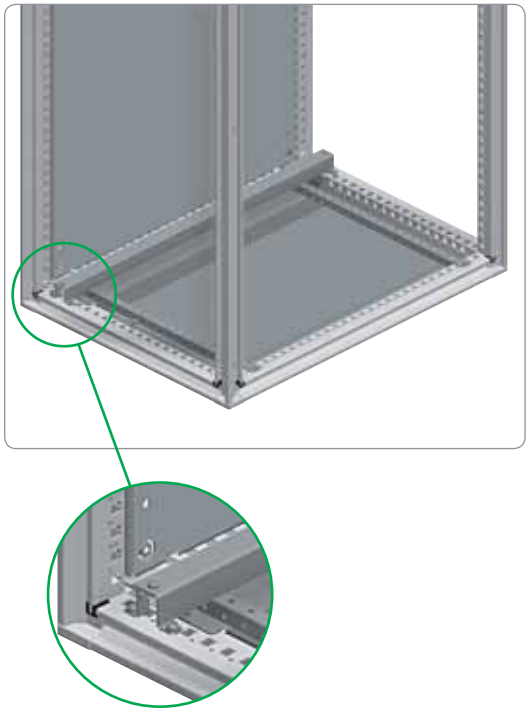
PB500971

L-rail for fixing cables

- Rail for fixing cables entering from the bottom.
- **Spacial SF and SFX:** fixing to the bottom frame, above the cable entry, or else to the plinth, using the plinth cross rails, see page **3/46**.
- **Spacial SM and SMX:** fixing to the bottom adjustment rails, above the cable entry, or else to the plinth, using the plinth cross rails, see page **3/46**.
- Adjustable depth with a pitch of 25 mm.
- The cables are fixed to the rail by means of metal clamps.
- Material: zinc-coated steel.
- It is not possible to mount it on a plinth cross rail.

Supply: one rail, two mounting supports and fixing elements.

Nominal dimensions (mm)	Reference
Width	
600	**NSYFCG60**
800	**NSYFCG80**
1000	**NSYFCG100**
1200	**NSYFCG120**
1600	**NSYFCG160**

For ranges SF, SM, SFX, SMX

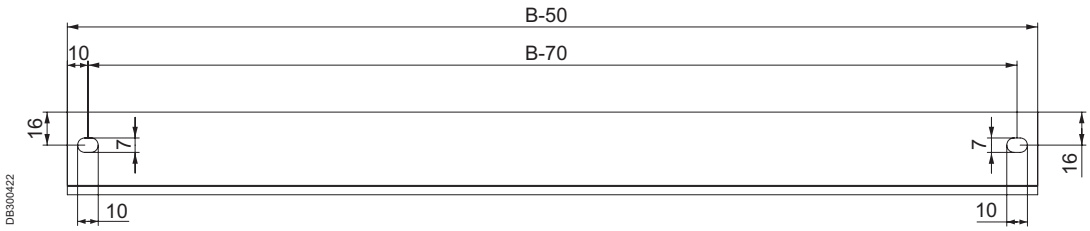

DB300422

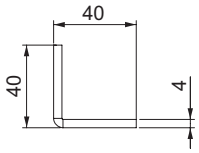

7

Cable management
Cable holding


PB500966

Plastic cable support

- It clips or screws onto 35 mm symmetric rails or a C-shaped rail.
- Quick and easy fixing of cables using cable ties.

Composition: 10 units.

Reference by unit. Order by multiples of 10 (10, 20, 30...).

Width (mm)	Maximum no. of cables	Reference
75	5	**NSYSCCDINLG75**
140	9	**NSYSCCDINLG140**

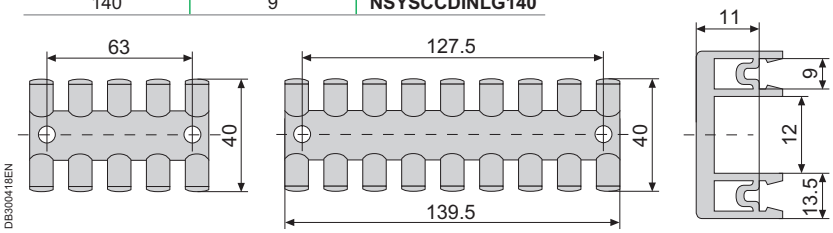


PB500967

Door cable-guide cross-rail

- Recommended for fixing cables in the internal equipment of the door.
- Direct fixing on the reinforcement frame.
- Height adjustable every 25 mm.
- Material: zinc-coated steel.

Composition: 2 cable-guide cross-rails and fixing elements.

Spacial dimensions (mm) Width (B)	Reference
500	**NSYSDGCR5**
600	**NSYSDGCR6**
800	**NSYSDGCR8**
1000	**NSYSDGCR10**

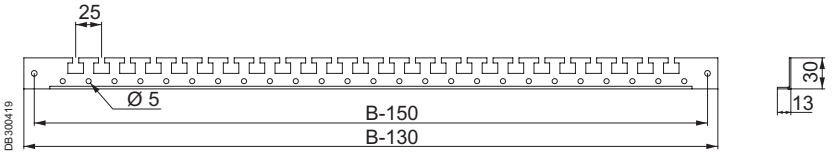

For ranges
SF, SM, SFX, SMX


PB500333

Door cable-guide cross-rails for wall-mounting enclosures

- They are installed on wall-mounting enclosures with heights from 400 mm for Spacial S3D/CRN and 500 mm for Spacial S3X.
- They are fixed to the door reinforcement frame by 2 self-tapping screws. The angle can be directed towards the body of the enclosure or towards the door.
- They make it easy to equip the inside of the door.
- Installation cable ties, page **7/715**.

Composition: 2 cable-guide cross-rails and fixing elements.

Door width (mm)	Reference
400	**NSYTFPCRN4**
500	**NSYTFPCRN5**
600	**NSYTFPCRN6**
800	**NSYTFPCRN8**
1000	**NSYTFPCRN10**

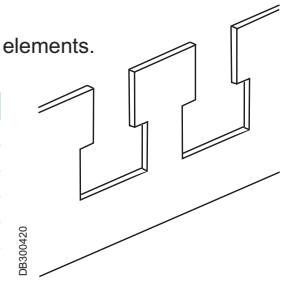
DB300420

For ranges
S3D, CRN, S3X

Cable management
Cable holding


PB500947

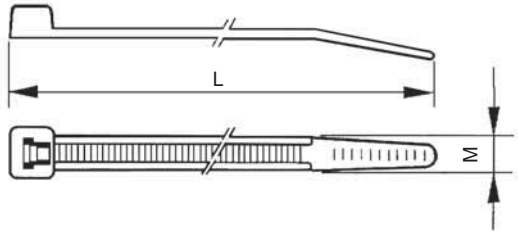

DB300423

Adjustable cable tie

- Polyamide 6/6.
- Operation temperature: –40 ... +85 °C.
- Melting point: 250 °C.
- Flame resistance according to UL 94 V-2.
- Glow-wire resistance at 650 °C / 30 s.
- Not sensitive to engine oil, greases, oil products, etc.
- Good resistance to bases and organic acids, chlorinated solvents. Not resistant to phenol.

Composition: 1000 units.

Reference by unit. Order by multiples of 1000 (1000, 2000, 3000...).

Width (mm)	Length (mm)	Maximum tightening Ø (mm)	Minimum resistance to pulling (kg)	Reference	
				Colourless	Black
2.5	100	18	8.2	**NSYLZ25100**	**NSYLN25100**
2.5	200	50	8.2	**NSYLZ25200**	**NSYLN25200**
3.5	200	49	8	**-**	**NSYLN35200**
3.6	140	33	13.6	**NSYLZ35140**	**NSYLN35140**
3.6	200	50	13.6	**NSYLZ35200**	**-**
3.6	295	76	13.6	**NSYLZ35290**	**NSYLN35290**
4.6	150	36	22	**NSYLZ48160**	**NSYLN48160**
4.6	390	109	22	**NSYLZ48390**	**NSYLN48390**
4.8	200	50	22.7	**NSYLZ48200**	**NSYLN48200**
4.8	270	73	22.7	**NSYLZ48280**	**NSYLN48280**
7.6	368	102	54.5	**NSYLZ76380**	**NSYLN76380**


PB500972

Captive clips

They allow cable ties from series LZ25100 to LZ46390 to be fixed on panels with thicknesses of up to 3.2 mm. Material: 6.6 nylon.

Composition: 100 units.

Reference by unit. Order by multiples of 100 (100, 200, 300...).

Drill-hole Ø, mm	Max. panel thickness, mm	Figure	Reference
6	3.2	1	**NSYSFC1**

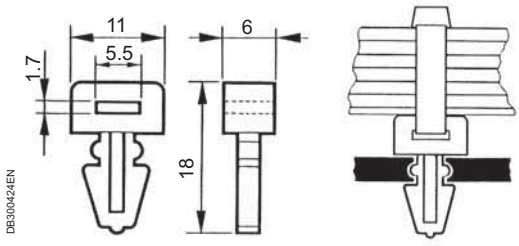

DB300424EN

Fig. 1

Cable management
Cable holding


PB500463

Cable-tie fixing support

For the installation of one or two cable-ties with a single screw. Material: 6.6 nylon. Compatible with the entire range of cable ties.

Composition: 100 units.

Reference by unit. Order by multiples of 100 (100, 200, 300...).

A	B	C	Fixing screw	Acceptable cable-tie width	Reference
12	18	9	M4	2.5 ÷ 4.8	**NSYKR6**
14.5	25	12	M6	2.5 ÷ 7.6	**NSYKR8**

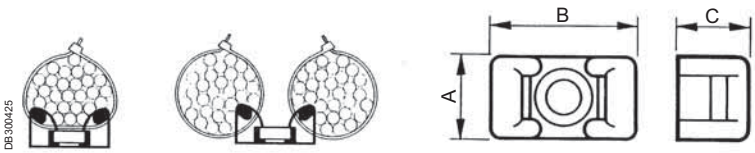

DB300425

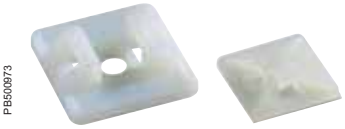
PB500973

Self-adhesive support bases

- Material: colourless 6/6 polyamide.

Composition: 100 units.

Reference by unit. Order by multiples of 100 (100, 200, 300...).

H (mm)	W (mm)	D (mm)	Fixing screws	Reference
6	19	19	3.6	**NSYMB3A**
8	26.5	26.5	4.8	**NSYMB4A**

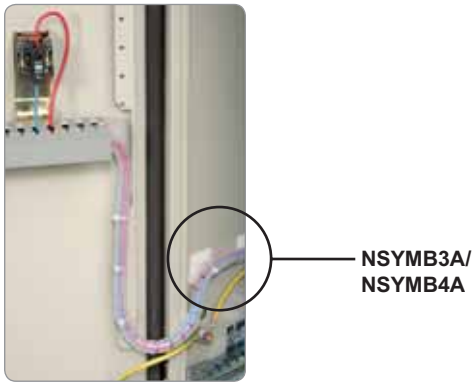

PB500974

Cable management


PB500962

Corrugated cable-gland tube

- Corrugated tube allowing cable entry between the structure and the door.
- Free from halogens and heavy metals.
- UV protection.
- Material: low-density polyethylene (LDPE), black.

Composition: one 25 m reel.

Nominal diameter (mm)	Inner Ø (mm)	Outer Ø (mm)	Reference
17	16.6	21.2	**NSYCPT17**
29	29	34.5	**NSYCPT29**
37	36	42.4	**NSYCPT37**
50	47.7	54.5	**NSYCPT50**


PB500963

Fixing support for corrugated tube

- Fixing support for corrugated tube; it offers the following mounting options:
– Directly on the enclosure.
– On a 19" swing rack and/or on cross-rails, by means of a fixing point.
- The supports can be assembled with one another to form sets of tubes that allow a better arrangement of the cables.
- The support is supplied with its cover.
- It allows the rotation of the tube once it is fixed on the support and prevents the corrugated tube from coming loose if subject to pulling movements.
- Material: polyamide (PA), black.

Composition: 10 units and fixing elements.

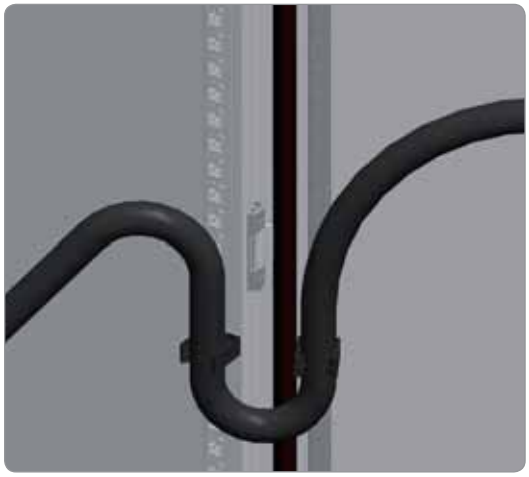
PB500964

Model (n. Ø)	Reference
17	**NSYCPTS17**
29	**NSYCPTS29**
37	**NSYCPTS37**
50	**NSYCPTS50**

n. ∅ = nominal diameter

Cable management



PB500965

Cable-gland for body/door

- Spiral strip for bundling cables.
- Allows cables to enter between the body and the door.

Supply: one 50 m reel.

Colour	Tightening range (mm)	Inner Ø (mm)	Outer Ø (mm)	Reference
Colourless	12 to 100	9	12	**NSYTC12100**

Cable management


PB500953


PB500954

Cable ducts with cover

- Rigid PVC material; with lateral through slots and rear perforations. Supplied in lengths of 2 m. RAL-7030 grey colour.
- Compliance with standards VDE 0660/506 and DIN 43659.
- Temperature resistance: –5 ... +60 °C.
- Behaviour in fire: material V0 according to UL 94.
- Fire resistance: 960 °C according to IEC 60695-2-1/1.
- Maximum capacity of H07.V.K 1.5 mm^2 flexible wire (filling factor: 0.6).

Dimensions (mm)			Composition (m)	Reference
Width	Height	Maximum capacity		
25	25	25	48	**NSYCD2M2525**
25	50	65	48	**NSYCD2M2550**
37.5	50	110	24	**NSYCD2M3750**
37.5	75	160	24	**NSYCD2M3775**
50	50	160	24	**NSYCD2M5050**
50	75	240	24	**NSYCD2M5075**
75	25	110	48	**NSYCD2M7525**
75	50	250	24	**NSYCD2M7550**
75	75	400	24	**NSYCD2M7575**
100	75	550	12	**NSYCD2M10075**
125	75	700	12	**NSYCD2M12575**

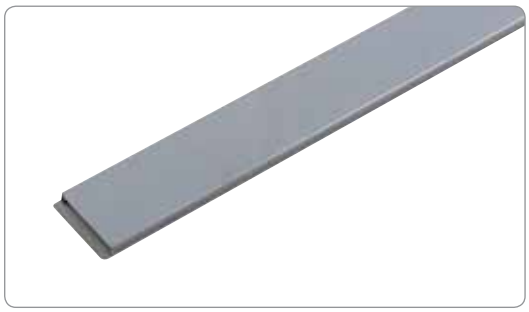
PB500955

Covers for cable duct

- Replacement covers.
- Supplied in lengths of 2 m.

For cable duct	Composition (m)	Reference
25	48	**NSYCDC2M25**
37.5	24	**NSYCDC2M37**
50	24	**NSYCDC2M50**
75	24	**NSYCDC2M75**
100	12	**NSYCDC2M100**
125	12	**NSYCDC2M125**


PB500956

Retention bars

- Fixed between 2 cable-duct slats by a hinged screw, preventing cable dropout.
- They can be cut to length to adapt to the width of the ducting.
- Material: flameproof high-impact polystyrene.

Supply: 50 units.

Reference by unit. Order by multiples of 50 (50, 100, 150...).

Reference
NSYCDRB

Cable management

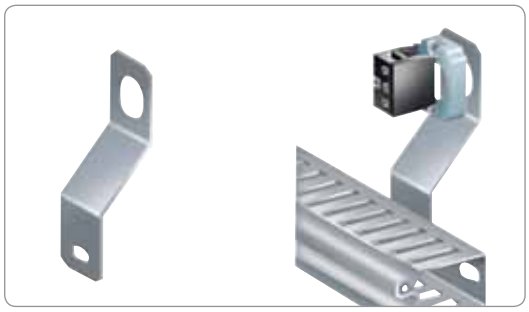

PB500218

For ranges
SF, SM, S3D, CRN,
PLA, S3X, SFX, SDX

∅ 22 mm cable-duct support

- Installed on the door of the wall-mounting or floor-standing enclosure associated with ∅ 22 mm elements.
- Material: treated steel.

Supply: 10 units.

Reference by unit. Order by multiples of 10 (10, 20, 30...).

Reference
NSYSPCP

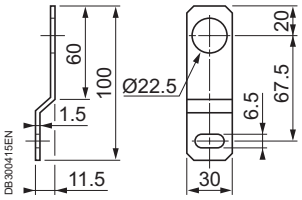



PB500957

For ranges
SF, SM, SFX, SMX,
SD, SDX, PLA

Ducting support on technical upright

- Allows cable ducts to be installed on technical uprights, while increasing the usable surface of the equipment (up to 20% according to the width of the cable duct).
- Material: galvanised steel.

Supply: 10 units.

Reference by unit. Order by multiples of 10 (10, 20, 30...).

Reference
NSYCDS

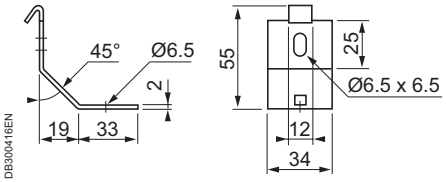

7

Cable management

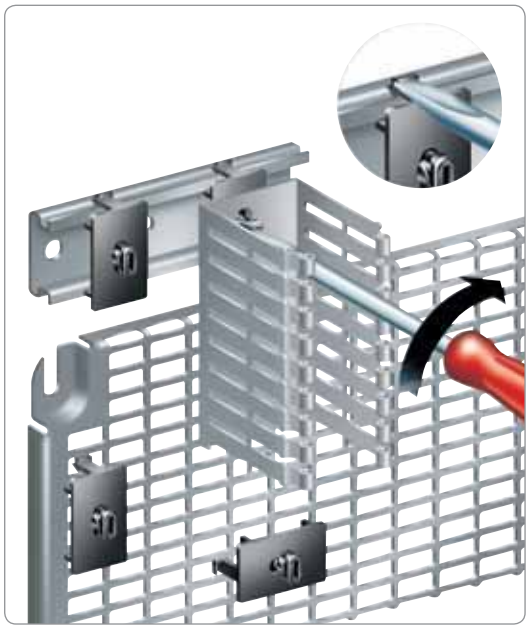
PB500958

Plastic foot for cable-duct support

- Clips onto the Telequick mounting plate or the 35 mm DIN rail.
- Includes a bolt for fixing the cable ducts through the 6.5 × 14 mm drill holes made in the back.
- The 2 functions, clipping and bolting, provide considerable time savings.
- Material: black polyamide. Behaviour in fire: V0 according to UL 94.
- Respects electrical insulation.

Supply: 20 units.

Reference by unit. Order by multiples of 20 (40, 20, 60...).

Reference
NSYSPC

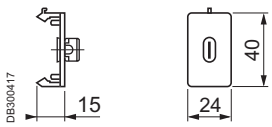

DB300417


PB500775

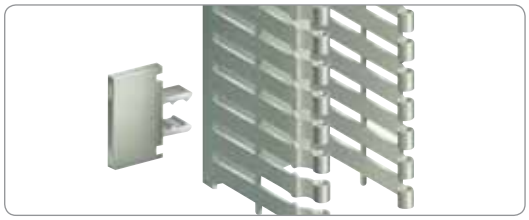
PB500959

Label frame

- In transparent plastic, clipping onto the slats of the cable ducts. Paper labels supplied.
- Material: polycarbonate.

Supply: 50 units.

Reference by unit. Order by multiples of 50 (50, 100, 150...).

Reference
NSYCDL

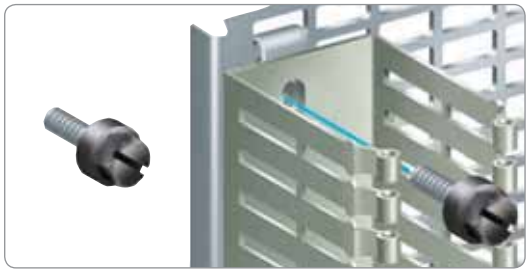
PB500960

Insulated-head screw

- M5 × 10 mm slotted hexagonal head.
- Respects electrical insulation.

Supply: 100 units.

Reference by unit. Order by multiples of 100 (100, 200, 300...).

Reference
NSYSM10M5HP

7

Cable management


PB500774

Lyre-shaped clamps

- Clip-on clamps designed for direct installation on the 19" racks and Telequick mounting plates.

Supply: 10 units.

Reference by unit. Order by multiples of 10 (10, 20, 30...).

Reference
NSYGCR

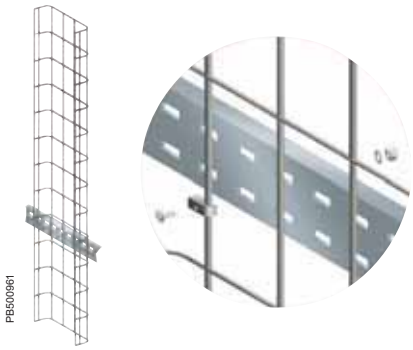
PB500961

Steel wired cable tray

- Mounting on the cable supports.
- Made from zinc-coated steel wire.
- Dimensions (2 types):

– 1845 × 200 × 35 mm.
– 1845 × 200 × 54 mm.

Supply: 1 vertical steel wired cable tray and fixing elements.

Necessary depth (mm)	Reference
35	**NSYBPC3**
70	**NSYBPC5**

7

Accessories



Lighting and power socket 7/126

Electrical power distribution rails 7/126

Fluorescent lamp E27 bulb base 7/128

Fluorescent lamp 7/129

Ultra-flat lamp 7/130

Lamp for 1U 19" rack 7/130

Incandescent lamp 7/130

7

Lighting and power socket
Current distribution accessories

PB500980

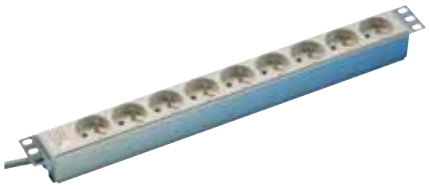

NSYAPU19F9

PB500981



NSYAPU19F6CB

PB500982



NSYAPU19F8S

PB500983

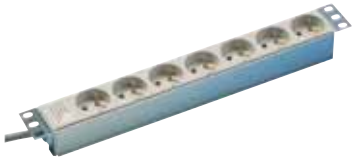

NSYAPU19F7FA

Electrical power distribution rails

- Sockets positioned at 35°, 2P + E, AC 250 V 16 A/3680 W with child protection.
- UTE version according to NFC61314, IEC60884 and NBNC61112-1 standards.
- VDE version according to DIN49 440, VDE0620-1, IEC60884 and UNE20315 standards.
- Anodised-aluminium rail with a height of 1 U.
- Direct fixing to the 19" rack or framework uprights by stainless-steel brackets, supplied.
- Material: fibreglass polyamide plastic with fire resistance to 850 °C.
- 3-m power cord (3 × 1.5 mm²) type H05 VVF, equipped with an overmoulded 2P + E, 250 V, 10/16 A plug according to VDE0620-1, IEC60884, UNE20315 and NBNC61-112-1 standards.

Number of sockets	Width (mm)	Depth (mm)	Type	UTE	VDE
3	10"	44	A	**NSYAPU10F3**	**NSYAPU10S3**
3	10"	44	B	**NSYAPU10F3S**	**NSYAPU10S3S**
9	19"	44	A	**NSYAPU19F9**	**NSYAPU19S9**
8	19"	44	B	**NSYAPU19F8S**	**NSYAPU19S8S**
6	19"	76	C	**NSYAPU19F6CB**	**NSYAPU19S6CB**
7	19"	44	D	**NSYAPU19F7FA**	**NSYAPU19S7FA**
6	19"	44	E	**NSYAPU19F6FT**	**NSYAPU19S6FT**
6	19"	76	F	**NSYAPU19F6F**	**NSYAPU19S6F**
7	704	44	B	**NSYAPUF7S**	**NSYAPUS7S**
10	968	44	B	**NSYAPUF10S**	**NSYAPUS10S**
12	1232	76	C	**NSYAPUF12CB**	**NSYAPUS12CB**

- A: Rail of sockets without protection.
- B: Rail of sockets with recessed green LED switch.
- C: Rail of sockets with bi-polar magnetothermal circuit-breaker C16 type C60N 16 A curve C.
- D: Suppression filter for interferences of up to 30 MHz, nominal frequency 400 Hz, attenuation 20 dB per decade.
- E: Interference suppression filter and surge arrester, 6.5 kA short-circuit protection, protection level Up 1.5 kV, voltage test Uoc 5 kV Uc 255 V, 50 Hz. Operating LED, interferences of 30 MHz, nominal frequency 400 Hz, attenuation 20 dB per decade.
- F: Differential protection 30 mA, 2 poles 25 A NC type.

7

PB500984



NSYAPUB

PB500985



NSYAPUBV

Fixing brackets

- For vertical assembly of distribution rails.
- Batch of 2 brackets, adaptable to all rails, delivered with fixings.
- Material: treated steel, thickness 10/10 mm.
- Fixing to the ends of the rail: reference **NSYAPUBV**.
- Fixing with an orientation of 90°: reference **NSYAPUB**.

Fixing	Reference
Orientation of 90°	**NSYAPUB**
Ends of the rail	**NSYAPUBV**

Lighting and power socket



Door switch

- Switches on enclosure/rack lighting when the door is opened.
- For other applications (air conditioning control, power distribution rails...), a supplementary contactor may be needed.
- Not compatible with some electronic application enclosures. Please contact us.
- Not compatible with modular distribution system.

Supply: 1 door switch and fixing elements.

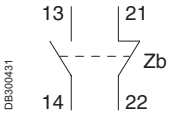

Environment characteristics

- Conforming to standards:
  Products: IEC 60947-5-1, EN 60947-5-1, UL 508, CSA C22-2 nº 14.
- Ambient air temperature:

– Operation: –25 to +70 °C.
– Storage: –40 to +70 °C.

- Electric shock protection:
  Class II conforming to IEC 61140 and NF C 20030.
- Degree of protection:
  IP 65 conforming to IEC 60529; IK 04 conforming to EN 50102.
- Materials:
  Bodies: Plastic.

Contact block characteristics

- Rated operational characteristics:
  ~ AC-15; A300 (Ue = 240 V, Ie = 3 A); Ith = 10 A.
  ⎓ DC-13; R300 (Ue = 250 V, Ie = 0,1 A), conforming to IEC 60947-5-1 Appendix A. EN 60947-5-1.
- Rated insulation voltage:

– Ui = 500 V degree of pollution 3 conforming to IEC 60947-1.
– Ui = 300 V conforming to UL 508, CSA C22-2 nº 14.

- Positive operation:
  N/C contacts with positive opening operation conforming to IEC 60947-5-1 Appendix K, EN 60947-5-1.
- Rated impulse withstand voltage:
  U imp = 6 kV conforming to IEC 60947-1, IEC 60664.
- Short-circuit protection:
  10 A cartridge fuse type gG (gl).
- Cabling:
  Screw clamp terminals: Capacity, min: 1 × 0.34 mm^2, max: 2 × 1.5 mm^2.

Door switch for floor-standing enclosures

Reference	For ranges
NSYDCM20	SF - SFX
NSYMDCM20	SM
NSYSNLPLA	PLA

For ranges
CRN, S3D, S3X

Door switch for wall-mounting enclosures

Reference
NSYINLCRN

Lighting and power socket

PB500987



NSYLAMDP

PB500988



NSYLAMIN

PB500989



NSYLAMPO

Fluorescent lamp with E27 bulb base

- Available in three versions:
– With motion sensor.
– With On-Off switch.
– Portable lamp with simple support, power cord and plugs.
- The references **NSYLAMDP** and **NSYLAMIN** allows the connection terminal for serial connection of a door switch and another lamp.

Designation	Reference	Fixation
Lamp with motion sensor	**NSYLAMDP**	Screws or magnetic*
Lamp with on/off switch	**NSYLAMIN**	
Portable lamp	**NSYLAMPO**	Adhesive

* It is impossible to fix it magnetically in stainless steel enclosures.

Technical characteristics

- Power consumption: 20 W.
- Voltage: 220 V / 50 – 60 Hz.
- Luminosity: 1000 Lm.
- Service life: 10000 h.
- Switch: Movement detector PIR, 3 min. lasting aprox.
- Connection: 4-pole screw connector 2.5 mm² (torque 0.5 Nm max.).
- Casing: Plastic according to UL94 V-0, light grey.
- Weight: Approx. 0.60 kg.
- Fitting position: Variable.
- Operating/Storage temperature: –20 to +50 °C (–4 to +122 °F) / –45 to +70 °C (–49 to +158 °F).
- Protection type/Protection class: IP20 / II (double insulated).
- According with the standard: IEC 55014 and IEC 50082-1.

DB300432

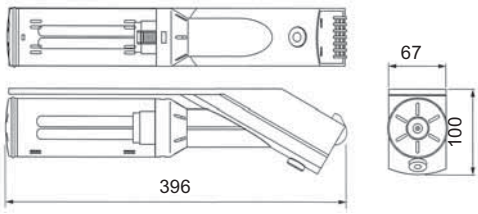

Accessories

- Separate power cord for ref. **NSYLAMDP** and **NSYLAMIN**.

Description	Reference
Power cord (1)	**NSYCLAM**

(1) Cord length: 2 m.

7

Lighting and power socket


PB500082

Fluorescent lamp

- Compact neon lamp, low consumption with switch and power socket.
- Magnetic fixing* or on a 35 mm DIN rail (non supply).
- Delivered with a protective glass.

* It is impossible to fix it magnetically in stainless steel enclosures.

Type of power socket	Luminosity	Power consumption	Voltage	Reference
UTE (16 A)	900 Lm	11 W	220/50 Hz	**NSYLAM75UTE**
VDE	900 Lm	11 W	220/50 Hz	**NSYLAM75**
BS (British Standard)	900 Lm	11 W	220/50 Hz	**NSYLAM75BS**
UL-CSA	700 Lm	9 W	115/60 Hz	**NSYLAM75120**
None	900 Lm	11 W	220/50 Hz	**NSYLAC75** (1)

(1) Unique fixing option on DIN rail.

Technical characteristics

- Service life: 5000 h.
- Switch: Integrated.
- Connection: 3-pole screw connector 2.5 mm² (torque 0.5 Nm max.).
- Casing: Plastic light grey.
- Dimensions: 355 × 65 × 70 mm.
- Weight: Aprox. 1.0 kg.
- Fitting position: Variable.
- Operating/Storage temperature: –20 to +50 °C (–4 to +122 °F) / –45 to +70°C (–49 to +158 °F).
- Protection type/Protection class: IP20.

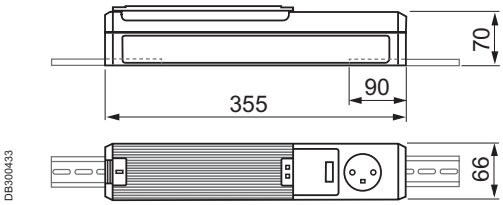

DB300433

Lighting and power socket


PB500990

Ultra-flat lamp

- Plain and compact lamp of low consumption with 2G7 socket.
- Magnetic fixing* or by screw M5 (non supply).

* It is impossible to fix it magnetically in stainless steel enclosures.

Designation	Socket	Reference
Ultra flat lamp VDE	SCHUKO	**NSYLAMS75**
Ultra flat lamp UTE	UTE	**NSYLAMS75UTE**
Ultra flat lamp	-	**NSYLAMX75**

Technical characteristics

- Power consumption: 11 W.
- Voltage: 220 V / 50 – 60 Hz.
- Luminosity: 900 Lm.
- Service life: 10000 h.
- Switch: Integrated.
- Connection: Screw connector 2.5 mm² (torque 0.8 Nm max.).
- Casing: Plastic according to UL94 V-0, light grey.
- Dimensions: 345 × 91 × 40 mm.
- Fitting position: Narrow surface/broad surface.
- Operating/Storage temperature: –20 to +50 °C (–4 to +122 °F) / –45 to +70 °C (–49 to +158 °F).
- Protection type/Protection class: IP20.

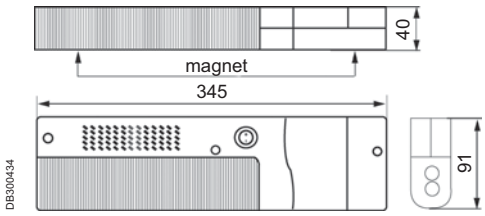

DB300434


PB500991

Lamp for 1 U 19" rack

- Compact fluorescent lamp 11 W, 220 V/50 Hz with switch and power socket.
- Delivered with the fixings required for installation.
- Fixing on the 19" rack.

Type of socket	Reference
UTE	**NSYLAM1UF**
VDE	**NSYLAM1US**

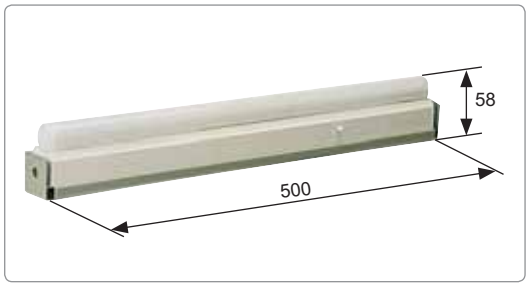

PB500992

Incandescent lamp

Incandescent lamp specifically designed for use in electrical enclosures.

- Connection voltage: 220 V/50-60 Hz.
- Consumption: 60 W.
- On/off switch.
- Input connection terminal.

Reference
NSYLAIOL68

Accessories



Door accessories 7/132

Plastic and metal document pocket 7/132

Folding support tray 7/133

Door retainer 7/134

Door holding system 7/135

Window for modular equipment IP 65 7/136

Plastic window IP 55 7/137

Acrylic window IP 55 7/138

Control protection frame IP 54 7/138

7

Door accessories


PB500464

Plastic document pocket

- Fixing by adhesive tape.
- Formats: A5 and A4.
- Material: polystyrene (PS), RAL-7035 grey.

Supply: 1 plastic document pocket.

Document format (mm)	A	B	C	Reference
A5	174	188	22	**NSYDPA5**
A4	234	278	22	**NSYDPA4**
A4	234	278	40	**NSYDPA44** (1)
A3	258	476	35	**NSYDPA3**

(1) Not compatible with 19" chassis or modular distribution.

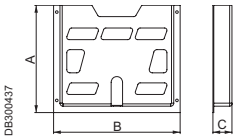


PB500465

[For ranges SF, SM, SFX, SMX]

Metal document pocket

- Direct fixing on the door reinforcement frame.
- Height adjustable in steps of 25 mm.
- Material: steel.
- Finish: painted with epoxy-polyester resin, RAL-7035 grey.

Supply: 1 metal document pocket and fixing elements.

Enclosure dimensions (mm)	Reference
Width (B)	
600	**NSYSDP6M**
800	**NSYSDP8M**

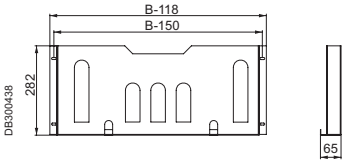

7

Door accessories


PB500611

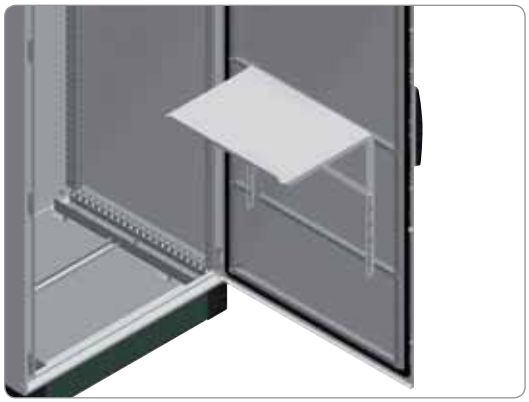
PB500612

For ranges
SF, SM, SFX, SMX

Folding support tray

- Adjustable horizontal support for laptop computers, documents or any other elements.
- Mounting on the door reinforcement frame.
- It can also be mounted on door cross-rails, see page **7/116**.
- Height adjustable in steps of 25 mm.
- In 1000-mm-wide enclosures, any size can be mounted using door cross-rail ref. **NSYSDCR10**.
- 4 positions: 45°, 60°, 75° and 90°.
- Material: steel.
- Thickness: 1.5 mm.
- Finish: painted with polyester-epoxy resin, RAL-7035 grey.
- Maximum load: 30 kg.

Supply: 1 folding support tray and fixing elements.

Spacial dimensions (mm)	Reference
Width	
500	**NSYSDT5**
600	**NSYSDT6**
800	**NSYSDT8**

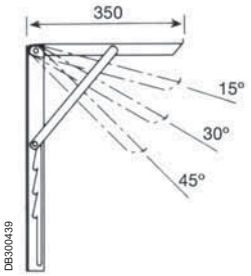

DB300439


PB500491

For ranges
SF, SM, SFX, SMX

Door cross rails

- Direct mounting cross rails on the profiles of the reinforcement frame of the door.
- Adjustable height with a pitch of 25 mm.
- Material: galvanised steel.
- Thickness: 2 mm.

Supply: two cross rails and bag of fixings.

Nominal dimensions (mm)	Reference
Width (B)	
400	**NSYSDCR4**
500	**NSYSDCR5**
600	**NSYSDCR6**
800	**NSYSDCR8**
1000	**NSYSDCR10**

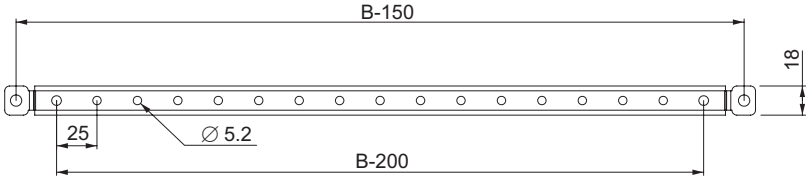

DE300440EN

7

Door accessories


PB500767


PB500508

[For ranges SF, SM]

Door retainer

- Door blocker at the opening limit.
- It is fixed directly to the front frame of the enclosure and to the reinforcement frame of the door.
- It can be installed on doors that open both to the right and to the left.

Supply: door stop and fixing elements.

Door stop model	Reference	For enclosures	Limit
Mechanical	**NSYSFMDR**	**Spacial SF**	90° and 120°
	NSYSMDR	**Spacial SM**	90°
Pneumatic	**NSYSFNDR**	**Spacial SF**	120°
	NSYSMNDR	**Spacial SM**	90° and 120°

Door accessories



PB500223

Steel door retainer

For blocking the door at the end of its travel.
- It is installed on enclosures with heights from 400 mm and widths from 300 mm.
- Earthing connection of the enclosure by means of the reinforcement rail.
- Earthing accessories supplied with the enclosure (earth-connection wire to be ordered separately), see page **7/140**.
- Warning: cannot be installed on 19" mounting plates or on enclosures equipped with internal door.

Description	Reference
Steel door retainer for Spacial wall-mounting steel enclosure	**NSYAEDRSCST**

For ranges
S3D, CRN, CRNG



PB500993

Door-holding system

To hold the door open while working on the enclosure.
- It is installed on the perforated rails of the enclosure doors at the required height.
- Material: polyamide 6 (PA6).
- It is only installed on enclosures with a height of less than 400 mm (no perforated rails).
- It cannot be installed in the Spacial CRN enclosures.

Description	Reference
Door-holding system for Spacial wall-mounting steel enclosure	**NSYAEDRS3DPA6**

For ranges
S3D, CRNG

7

See also the accessories

Support for cable ducting with diameter 22 page **7/122**

Door cable-guide cross-rail page **7/116**

Door accessories



PB500994

Fig. 1



PB500995

Fig. 2

Window for modular equipment, IP 65

They provide viewing and access to the inside of the enclosure while keeping the IP 65 protection degree.
Made from transparent polycarbonate.

Supply: 1 window.

N.° of modules	Fig. n.°	A	B	C		Reference	
				Low cover	High cover	Low cover	High cover
2	1	78	60	15	25	**NSYVA272M**	**NSYVA272MA**
4	1	78	95	15	25	**NSYVA274M**	**NSYVA274MA**
6	1	78	130	15	25	**NSYVA276M**	**NSYVA276MA**
8	1	78	165	15	25	**NSYVA278M**	**NSYVA278MA**
10	1	78	200	15	25	**NSYVA2710M**	**NSYVA2710MA**
12	1	78	235	15	25	**NSYVA2712M**	**NSYVA2712MA**
16	2	195	165	13	-	**NSYVA2716M**	**-**
24*	2	196	235	13	-	**NSYVA2724M**	**-**
36*	2	248	235	13	-	**NSYVA2736M**	**-**
51**	2	248	325	13	-	**NSYVA2751M**	**-**

* In rows of 12 modules mounted vertically.
** In rows of 17 modules mounted horizontally.

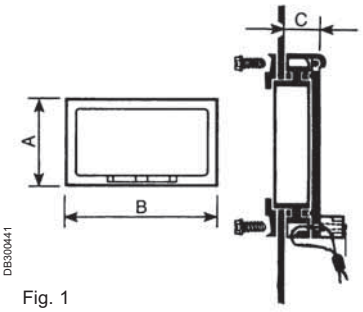

DB300441

Fig. 1

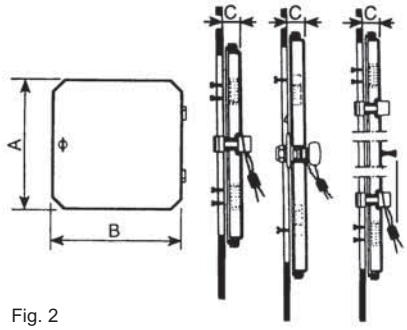

DB300442

Fig. 2

7

Door accessories


PB500996

Plastic window IP 55

- Plastic window with hinged cover for installation on front panel, IP 55.
- Polycarbonate cover and PVC body.
- External dimensions: 213 × 133 mm.
- Internal dimensions of the window: 180 × 78 mm.
- Delivered with a drilling template.

Composition: 1 plastic window.

Reference
NSYMW10M


PB500997

Modular front panel with IP 55 sealed window

- Frame with transparent hinged cover for mounting modular switchgear on the front panel.
- Opening: 46 × 180 mm (10 modules).

Composition: 1 modular front panel.

Reference
NSYMW10MK


PB500997

Kit for fixing the switchgear

- The fixing kit includes a DIN rail and its two supports.
- The unit is delivered assembled.

Composition: 1 DIN rail and two supports.

Reference
NSYMW10MR


PB500997

Mounting example:
NSYMW10MK + **NSYMW10MR**

7

Door accessories



Acrylic window IP 55

- Transparent acrylic window, hinged, with gasket for installation on front panel. IP 55.
- Closure by lock with key nº 1242 E (2 locks for the height of 800 mm).
- Delivered with 2 hinges (3 for the height of 800 mm) and the fixings required for installation.
- Does not filter out UV.

Composition: 1 acrylic window, hinges, fixings and drilling template.

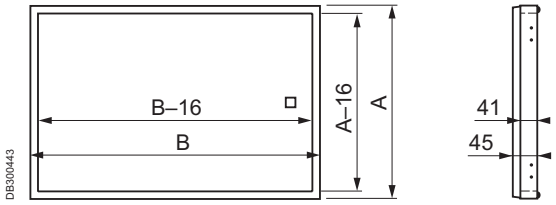

Acrylic window (mm)			Reference
A	B	Depth	
200	400	45	**NSYAW24**
400	400	45	**NSYAW44**
500	400	45	**NSYAW54**
600	400	45	**NSYAW64**
800	400	45	**NSYAW84**
200	500	45	**NSYAW25**
400	500	45	**NSYAW45**
500	500	45	**NSYAW55**
600	500	45	**NSYAW65**
800	500	45	**NSYAW85**
200	600	45	**NSYAW26**
400	600	45	**NSYAW46**
500	600	45	**NSYAW56**
600	600	45	**NSYAW66**
800	600	45	**NSYAW86**

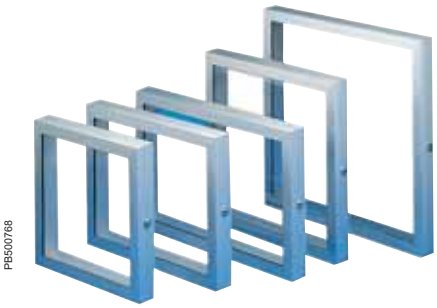

Control protection frame IP 54

- To prevent accidental handling of the control units by any unauthorised person.
- Allows all the displayed information to be read without opening the door.
- Construction: aluminium frame and Altuglas viewing window.
- Equipped with hinges for opening.
- Closure by a nº 1242 E lock, type 911 B Ronis.

Composition: 1 frame with window, hinges, fixings and drilling template.

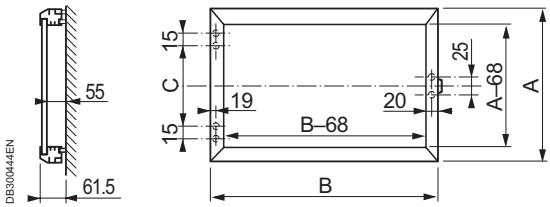

Door window (mm)			Reference
A	B	C	
400	400	220	**NSYMA44**
400	500	220	**NSYMA45**
400	600	220	**NSYMA46**
400	800	220	**NSYMA48**
500	500	320	**NSYMA55**
600	500	420	**NSYMA65**
500	600	320	**NSYMA56**
500	800	320	**NSYMA58**
600	600	420	**NSYMA66**

Accessories


PB500084


PB500217

Earthing accessories 7/140


PB500219


PB500220

Floor accessories 7/143


PB500221

Paint accessories 7/145

Earthing accessories

PB500084



Earth braids

- Guarantee the earth connection for high frequencies, avoiding the disturbing electric currents that are produced.
- Material: tinned copper.

Supply: 10 earth braids (nuts and washers not included).

Reference by unit. Order by multiples of 10 (10, 20, 30...).

Length (mm)	Width (mm)	Section (mm²)	Terminal ∅ (mm)	Reference
150	12	6	6.5	**NSYEB156D6**
150	17	10	6.5	**NSYEB1510D6**
155	17	16	8.5	**NSYEB1516D8**
200	27	25	8.5	**NSYEB2025D8**
200	33	50	8.5	**NSYEB2050D8**

PB500217



Earth cables

- Make it easier to install a safe earth connection, with a perfect contact, with optimised length.
- Material: brass and copper alloy terminal, green and yellow PVC insulating sheath.

Supply: 10 earth cables (nuts and washers not included).

Reference by unit. Order by multiples of 10 (10, 20, 30...).

Length (mm)	Section (mm²)	Terminal ∅ (mm)	Reference
130	6	6.4	**NSYEL136D6**
160	6	6.4	**NSYEL166D6**
160	6	8.3	**NSYEL166D8**
170	10	8.3	**NSYEL1710D6**
220	6	6.4	**NSYEL226D6**
220	25	8.3	**NSYEL2225D8**
250	10	6.4	**NSYEL2510D6**
350	25	8.3	**NSYEL3525D8**

Earthing accessories

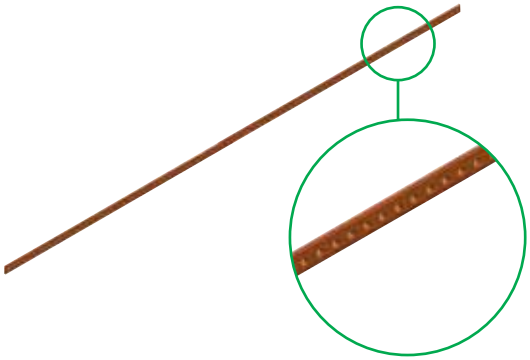
PB500948

Earthing strip

- Perforated brass bar, 15 × 3 mm.
- 1 m long.
- 87 connection points, M5 drill holes.

Composition: 1 earthing strip and fixing elements.

Reference
NSYECB1M153


PB500699

Central earthing point

- Connects earthing braids and cables to the structure of the enclosure.
- Fixing to the structure by means of self-tapping screws.
- The earth connection is made by means of the M8 × 18 mm bolt.

Supply: 1 central earthing point, elements for fixing to the structure, and fixings for fixing to the bolt.

Reference
NSYCEP

For ranges SF, SM, SFX, SMX, SD, SDX

Earthing accessories



For ranges
S3D, S3X, CRN

Fixing lugs for the earthing strip

- They allow the mounting of an earth-collector rail or a DIN rail at the top and bottom of an enclosure.
- Fixing on holes made in the gutter of the enclosure.
- Mounting incompatible with certain accessories. Please consult us.
- Earthing strip, page **7/141**.

Composition: 2 lugs and fixings.

Reference
NSYEDCOS

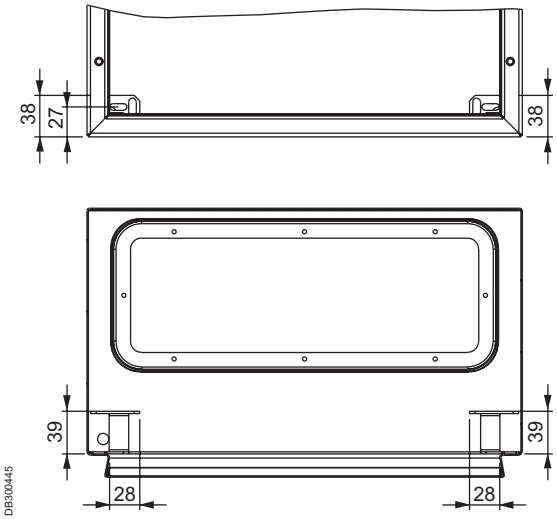

7

Floor accessories



PB500578

For ranges
SF, SM, SD

Transport casters

- Set of 4 casters, 2 with a blocking system.
- Quick installation on plinths with heights of 100 and 200 mm, except the plinth for enclosure sets.
- They can be installed in front or side position.
- Clipping and fixing to the corner by screws.
- Maximum load: 100 kg per castor.
- For use on flat surfaces.
- Height: 110 mm.

Supply: 4 transport casters (2 with a blocking system) and fixing elements.

Reference
NSYSTW

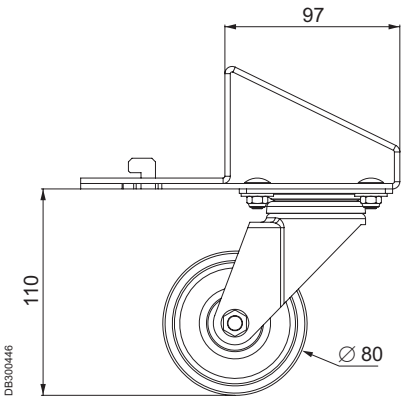



PB500219

For ranges
SF, SM, SD,
SDX, SFX, SMX

Enclosure casters

- Set of 4 casters.
- Double casters.
- Maximum load: 160 kg per caster.
- Height: 92 mm.
- Diameter: 64 mm.

Supply: 4 casters and fixing elements.

Reference
NSYSW

7

Floor accessories

PB501001



Fixed feet.

PB501002



Adjustable feet.

Levelling feet (fixed and adjustable)

- Set of 4 floor feet.
- 2 models:

– Fixed: height 42 mm.
Material: steel.
– Adjustable: height 22 mm.

- Maximum load: 100 kg per foot.

Levelling feet	
Model	**Reference**
Fixed feet	**NSYSPSJ**
Adjustable feet	**NSYSPRJ**

For ranges SF, SM, SFX, SMX, SD, SDX

7

PB500220

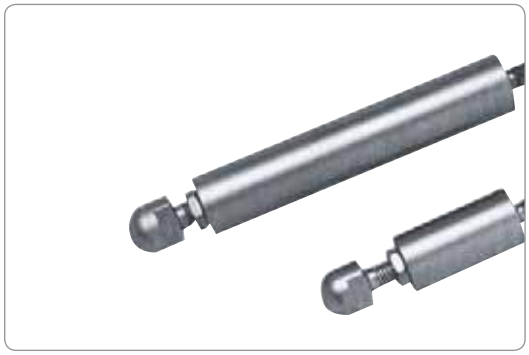

Hygienic stainless-steel feet

- Set of 4 hygienic feet, made from 316L stainless steel, specific for harsh environments.
- Models:

– Height: 100 mm.
– Height: 200 mm.

- Height adjustment: 20 mm.
- Maximum load: 100 kg per foot.

Supply: 4 feet.

316L stainless-steel hygienic feet	
Model with height (mm)	**Reference**
100	**NSYPHX100**
200	**NSYPHX200**

For ranges SF, SM, SFX, SMX, SD, SDX

Paint accessories


PB500221

For ranges
SM, SF, SD,
CRN, S3D, SDB

Aerosol paint can

- Air-drying paint.
- Content: 150 g.
- Colours: RAL 7035 and RAL 7032.

RAL	Reference
7032	**NSYBPA7032**
7035	**NSYBPA7035**


PB501003

For ranges
SM, SF, SD,
CRN, S3D, SDB

Paint touch-up

- Paint for touching up with a brush.
- Air-drying.
- Colours: RAL 7035 and RAL 7032.

RAL	Reference
7032	**NSYTUP7032**
7035	**NSYTUP7035**