Rated operational current AC-15 230 V I_e A	Rated operational current AC-15 400 V I_e A	Rated operational current DC 220 V I_e A	Actuating voltage U_s V DC	Actuating current I mA	Circuit symbol	For use with	**Part no.**	**Price** See price list	Std. pack	**Information relevant for export to North America**

Amplifier module for separate mounting

Input with integrated suppressor circuit for overvoltage limitation

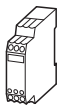

2	2	0.03	24	25	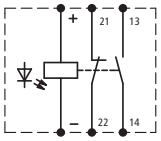	...DILM DIMLP... DILL... DILK...	**ETS4-VS3** 083094		1 Off

Product Standards	IEC/EN 60947-4-1; UL 508; CSA-C22.2 No. 14-05; CE marking
UL File No.	E29184
UL CCN	NKCR
CSA File No.	012528
CSA Class No.	2411-03, 3211-04
NA Certification	UL Listed, CSA certified

Notes Contactor coils with rated operational current > 2 A must be actuated via the DILER-G mini contactor relay.
Rated operational current DC:
Making and breaking conditions DC-13, time L/R 300ms

Individual coils



For use with	DC voltage **Part no.** Article no.	DC voltage **Prices** See price list	AC voltage **Part no.** Article no.	AC voltage **Price** See price list	Std. pack	**Notes**
DILM17 DILM25 DILM32 DILM38	**DILM32-XSP(RDC24)**[1] 281155		**DILM32-XSP(230V50HZ,240V60HZ)** 281141		1 Off	For additional actuating voltages → Page 5/79
DILM40 DILM50 DILM65 DILM72	**DILM65-XSP(RDC24)**[1] 281185		**DILM65-XSP(230V50HZ,240V60HZ)** 281171			
DILM80 DILM95	**DILM95-XSP(RDC24)**[1] 230080		**DILM95-XSP(230V50HZ,240V60HZ)** 230062			
DILM115 DILM150 DILM170	**DILM150-XSP(RDC24)**[1] 230115		**DILM150-XSP(RAC240)**[1] 230112			
DILM185A DILM225A	**DILM225A-XSP(RDC24)**[1] 139568		**DILM225A-XSP(RAC240)**[1] 139565			

Notes [1] Incl. electronic module

Information relevant for export to North America

Product Standards	IEC/EN 60947-4-1; UL 508; CSA-C22.2 No. 14-05; CE marking
UL File No.	E29096
UL CCN	NLDX
CSA File No.	012528
CSA Class No.	2411-03, 3211-04
NA Certification	UL Listed, CSA certified

	For use with	DC voltage **Part no.** Article no.	**Price** See price list	AC voltage **Part no.** Article no.	**Price** See price list	Std. pack	**Notes**
Electronic modules including coils							
	DILM250 DILM300A	**DILM250-XSP/E(RA250)**[1] 208252		**DILM250-XSP/E(RA250)**[1] 208252		1 Off	For additional actuating voltages → Page 5/81
	DILM400 DILM500	**DILM500-XSP/E(RA250)**[1] 208256		**DILM500-XSP/E(RA250)**[1] 208256			
	DILM580 DILM650 DILM750 DILM820 DILM1000	**DILM1000-XSP/E(RA250)**[1] 289145		**DILM1000-XSP/E(RA250)**[1] 289145			
	DILH1400	–		**DILH1400-XSP/E(RAW250)**[2] 289161			
	DILM250-S DILM300A-S	–		**DILM250-S-XSP/E(220-240V50/60HZ)**[2] 274202			
	DILM400-S DILM500-S	–		**DILM500-S-XSP/E(220-240V50/60HZ)**[2] 274205			

1)

Information relevant for export to North America

Product Standards	IEC/EN 60947-4-1; UL 508; CSA-C22.2 No. 14-05; CE marking
UL File No.	E29096
UL CCN	NLDX
CSA File No.	1017510
CSA Class No.	3211-04
NA Certification	UL Listed, CSA certified

2)

Information relevant for export to North America

Product Standards	IEC/EN 60947-4-1; UL 508; CSA-C22.2 No. 14-05; CE marking
UL File No.	E29096
UL CCN	NLDX
CSA File No.	012528
CSA Class No.	3211-04
NA Certification	UL Listed, CSA certified

CMD HPL05068EN

Description, ordering



General

For safety-related off switching to safety category 3 and 4 according to EN 954-1, at present two contactors must be used in series. Especially with larger contactors this is an expensive solution.

Application

This is where the CMD can be used. The function of the CMD is to monitor the main contacts of a contactor against welding. For this the control voltage of the contactor is compared with the state of the main contacts which is reliably monitored using a mirror contact (IEC EN 60947-4-1 Annex F). If the coil is de-energized and the contactor does not drop out the CMD trips the upstream circuit-breaker/motor protective circuit breaker/switch-disconnector via a shunt release.

Safety

The CMD has a safety-compliant design so that in safety combinations with a circuit-breaker/motor protective circuit breaker/switch disconnector the reliable switch off in the case of a "welded contactor" can be guaranteed. In this application it replaces the series connection of a second contactor. As a component it conforms to safety category 3 according to EN 954-1 and EN ISO 13849.

Mounting

The CMD can be combined with the following Eaton components:

- Contactors:
  - DILEM
  - DILM7 to DILM150
  - DILM185(-S) to DILM500(-S):
  - DILM580 to DILM1600
  - DILH1400 … DILH2000
  - SE-1A-PKZ2 and S-PKZ2

For the wiring of the CMD the auxiliary N/C contact, mirror contact must be according to IEC/EN 60947-4-1 and the auxiliary N/O contact must be interlocked and opposing according to IEC/EN 60947-5-1. Also the auxiliary N/C contact for the feedback circuit must have a mirror contact function according to IEC/EN 60947-4-1.

- Motor-protective circuit-breakers/ circuit-breakers:
  - PKZ2 + U-PKZ2(18VDC)
  - NZM1 + NZM1-XUVL
  - NZM2 + NZM2/3-XUV
  - NZM3 + NZM2/3-XUV
  - NZM4 + NZM4-XUV
  - N1 + NZM1-XUVL
  - N2 + NZM2/3-XUV
  - N3 + NZM2/3-XUV
  - N4 + NZM4-XUV

Auxiliary contact requirements per contactor:

	CMD	Self maintaining	Feedback circuit	Electrical interlock
DOL starter	1 N/O + 1 N/C	1S	1 B	
Reversing starter	1 N/O + 1 N/C	1S	1 B	1 B

Ordering

	Part no. Article no.	Price See Price List	Std. pack
CMD contactor monitoring device			
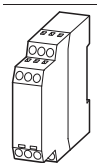	**CMD(24VDC)** 106170		1 Off
	CMD(220-240VAC) 106172		1 Off

Engineering

DOL starter

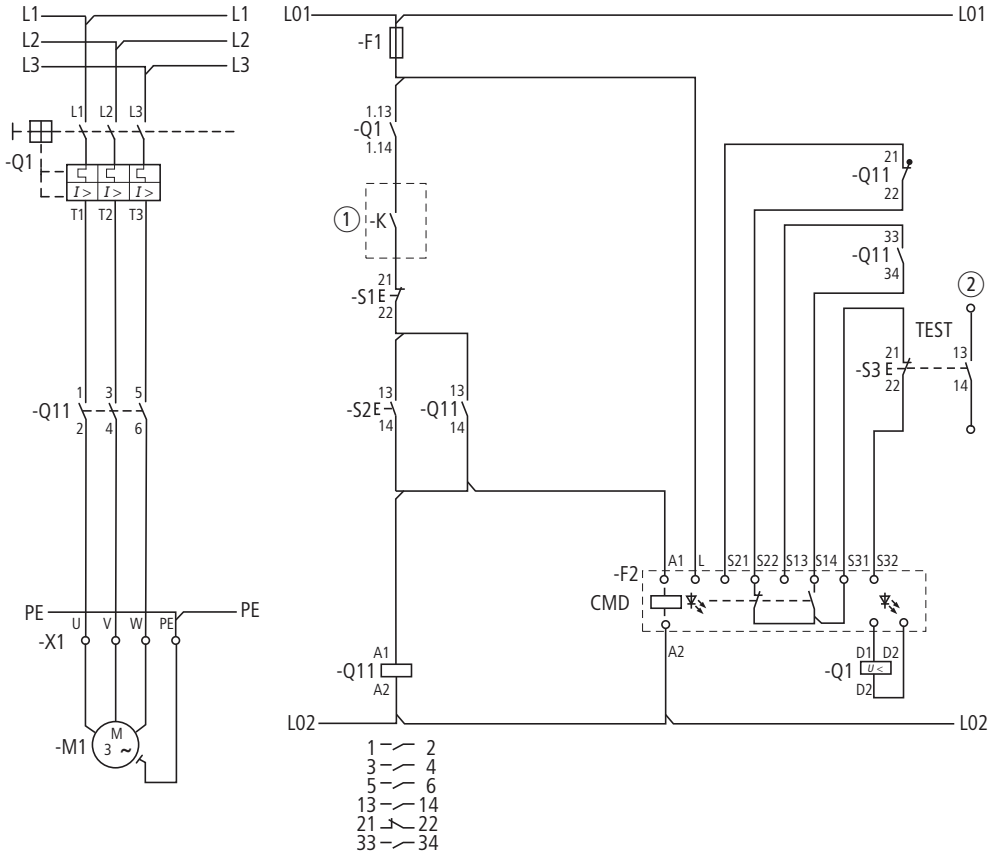

Reversing starter

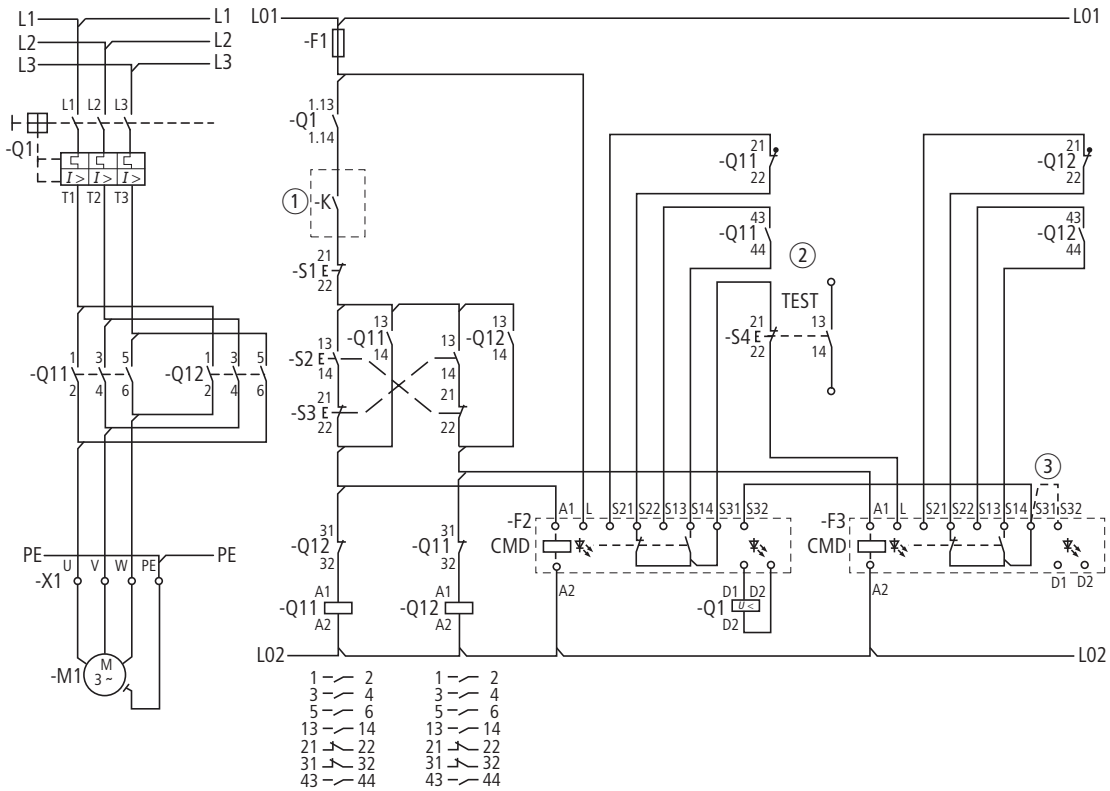

① Switching by safety relay of safety PLC
② Signal contact to PLC evaluation
③ CMD (24VDC)

Ordering

AC	DILER-40(...)	DILER-31(...)	DILER-22(...)	DILEEM-10(...)	DILEEM-01(...)
	Article no.[1]	Article no.[1]	Article no.[1]	Article no.[1]	Article no.[1]
Standard voltages	See price list	See price list	See price list	See price list	See price list
24V 50Hz	010094	010251	010344	051604	051629
48V 50Hz	010190	010044	010201	051603	051628
240V 50Hz	010478	010300	010138	051602	051627
115V 60Hz	010270	010204	010211	051598	051624
42V 50Hz, 48V 60Hz	–	–	–	051612	051637
110V 50Hz, 120V 60Hz	051756	051765	051774	051611	051636
190V 50Hz, 220V 60Hz	051757	051766	051775	051610	051635
220V 50Hz, 240V 60Hz	051758	051767	051776	051609	051634
230V 50Hz, 240V 60Hz	051759	051768	051777	051608	051633
380V 50Hz, 440V 60Hz	051760	051769	051778	051607	051632
400V 50Hz, 440V 60Hz	051761	051770	051779	051606	051631
415V 50Hz, 480V 60Hz	051762	051771	051780	051605	051630
24V 50/60Hz	021924	021594	021704	051596	051621
42V 50/60Hz	033459	029869	029433	051595	051620
110V 50/60Hz	021961	021624	021871	051592	051618
230V 50/60Hz	052725	052509	052508	056674	058771
DC	**DILER-40-G(...)**	**DILER-31-G(...)**	**DILER-22-G(...)**	**DILEEM-10-G(...)**	**DILEEM-01-G(...)**
	Article no.[1]	Article no.[1]	Article no.[1]	Article no.[1]	Article no.[1]
Standard voltages	See price list	See price list	See price list	See price list	See price list
12V DC	079711	079761	080728	051644	051649
24V DC	010223	010157	010042	051643	051650
48V DC	010255	010205	010346	051642	051648
110V DC	010287	010253	010043	051640	051646
220V DC	010303	010269	010091	051639	051645

Notes [1] To obtain the article number for ordering, read under selected part number and actuating voltage from the table. Devices with dual-voltage coils are to be ordered under a single article number.

AC		**DILEM-10(...)**	**DILEM-01(...)**	**DILEM12-10(...)**	**DILEM12-01(...)**	**DILEM4(...)**
		Article no.[1]	Article no.[1]	Article no.[1]	Article no.[1]	Article no.[1]
Standard voltages		See price list	See price list	See price list	See price list	See price list
24V 50Hz		010005	010086	127067	127083	014754
48V 50Hz		010020	010294	–	–	–
240V 50Hz		010032	010151	–	–	014305
115V 60Hz		010024	010470	–	–	–
42V 50Hz, 48V 60Hz		051782	051791	–	–	–
110V 50Hz, 120V 60Hz		051783	051792	127072	127088	051801
190V 50Hz, 220V 60Hz		051784	051793	–	–	–
220V 50Hz, 240V 60Hz		051785	051794	–	–	051803
230V 50Hz, 240V 60Hz		051786	051795	–	–	051804
380V 50Hz, 440V 60Hz		051787	051796	–	–	–
400V 50Hz, 440V 60Hz		051788	051797	–	–	051806
415V 50Hz, 480V 60Hz		051789	–	–	–	–
24V 50/60Hz		021417	020402	127079	127095	022044
42V 50/60Hz		032174	033233	–	–	–
110V 50/60Hz		021455	020436	127081	127097	–
230V 50/60Hz		052302	051114	127082	127098	052506
DC		**DILEM-10-G(...)**	**DILEM-01-G(...)**	**DILEM12-10-G(...)**	**DILEEM12-01-G(...)**	**DILEM4-G(...)**
		Article no.[1]	Article no.[1]	Article no.[1]	Article no.[1]	Article no.[1]
Standard voltages		See price list	See price list	See price list	See price list	See price list
12V DC		079594	079642	–	–	079680
24V DC		010213	010343	127132	127137	012701
48V DC		010245	010496	–	–	–
110V DC		010309	010136	–	–	–
220V DC		010325	010168	–	–	–

Notes

[1] To obtain the article number for ordering, read under selected part number and actuating voltage from the table. Devices with **dual-voltage coils** are to be ordered under a **single** article number.

DILA

HPL05072EN



AC	With screw terminals			With Spring-loaded terminals		
	DILA-40(...)	DILA-31(...)	DILA-22(...)	DILAC-40(...)	DILAC-31(...)	DILAC-22(...)
	Article no.[1]	Article no.[1]	Article no.[1]	Article no.[1]	Article no.[1]	Article no.[1]
Standard voltages	See price list	See price list	See price list	See price list	See price list	See price list
24V 50Hz	276316	276351	276386	276431	276463	276495
240V 50Hz	276318	276353	276388	–	–	–
110V 50Hz 120V 60Hz	276326	276361	276396	276438	276470	276502
190V 50Hz 220V 60Hz	276327	276362	276397	–	–	–
220V 50Hz 240V 60Hz	276328	276363	276398	–	–	–
230V 50Hz 240V 60Hz	276329	276364	276399	276441	276473	276505
380V 50Hz 440V 60Hz	276330	276365	276400	–	–	–
400V 50Hz 440V 60Hz	276331	276366	276401	–	–	–
24V 50Hz/60Hz	276333	276368	276403	276445	276477	276509
42V 50Hz/60Hz	276334	276369	276404	–	–	–
110V 50Hz/60Hz	276335	276370	276405	–	–	–
220V 50Hz/60Hz	276336	276371	276406	–	–	–
230V 50Hz/60Hz	276337	276372	276407	276449	276481	276513
Special voltages other than the already shown normal voltages [2]	See price list	See price list	See price list	See price list	See price list	See price list
...V 50Hz(12-500V)[3]	276341	276376	276411	276453	276485	276517
...V 60Hz(12-600V)[3]	276342	276377	276412	276454	276486	276518
DC	**With screw terminals**			**With Spring-loaded terminals**		
	DILA-40(...)	DILA-31(...)	DILA-22(...)	DILAC-40(...)	DILAC-31(...)	DILAC-22(...)
	Article no.[1]	Article no.[1]	Article no.[1]	Article no.[1]	Article no.[1]	Article no.[1]
Standard voltages	See price list	See price list	See price list	See price list	See price list	See price list
24V DC	276344	276379	276414	276456	276488	276520
48V DC	276345	276380	276415	–	–	–
110V DC	276347	276382	276417	276459	276491	276523
220V DC	276348	276383	276418	276460	276492	276524
Special voltages other than the already shown normal voltages [2]	See price list	See price list	See price list	See price list	See price list	See price list
...V DC(12-250V)[3]	276349	276384	276419	276461	276493	276525

Notes

[1] The article number is a combination of part no. and operating voltage devices with dual-voltage coils can be ordered under a single article no.
[2] With non-standard voltages the required actuating voltage from the defined range (...–...V) must be stated.
[3] Minimum order quantity 10 units

AC	**DILM7-10 (...)**	**DILM7-01 (...)**	**DILM9-10 (...)**	**DILM9-01 (...)**	**DILM12-10 (...)**	**DILM12-01 (...)**	**DILM15-10 (...)**	**DILM15-01 (...)**
	Article no.[1]	Article no.[1]	Article no.[1]	Article no.[1]	Article no.[1]	Article no.[1]	Article no.[1]	Article no.[1]
Standard voltages	See price list	See price list	See price list	See price list	See price list	See price list	See price list	See price list
24V 50Hz	276537	276572	276677	276712	276817	276852	290045	290080
240V 50Hz	276539	276574	276679	276714	276819	276854	–	–
42V 50Hz 48V 60Hz	276546	–	276686	–	276826	–	–	–
110V 50Hz 120V 60Hz	276547	276582	276687	276722	276827	276862	290055	290090
190V 50Hz 220V 60Hz	276548	276583	276688	276723	276828	276863	–	–
220V 50Hz 240V 60Hz	276549	276584	276689	276724	276829	276864	–	–
230V 50Hz 240V 60Hz	276550	276585	276690	276725	276830	276865	290058	290093
380V 50Hz 440V 60Hz	276551	276586	276691	276726	276831	276866	–	–
400V 50Hz 440V 60Hz	276552	276587	276692	276727	276832	276867	–	–
415V 50Hz 480V 60Hz	276553	–	276693	–	276833	–	–	–
24V 50Hz/60Hz	276554	276589	276694	276729	276834	276869	290062	290097
42V 50Hz/60Hz	276555	276590	276695	276730	276835	276870	–	–
110V 50Hz/60Hz	276556	276591	276696	276731	276836	276871	–	–
220V 50Hz/60Hz	276557	276592	276697	276732	276837	276872	–	–
230V 50Hz/60Hz	276558	276593	276698	276733	276838	276873	290066	290101
Special voltages other than the already shown normal voltages [2]	See price list	See price list	See price list	See price list	See price list	See price list	See price list	See price list
...V 50Hz (12 – 600V) [3]	276562	276597	276702	276737	276842	276877	290070	290105
...V 60Hz (12 – 600V) [3]	276563	276598	276703	276738	276843	276878	290071	290106
DC	**DILM7-10 (...)**	**DILM7-01 (...)**	**DILM9-10 (...)**	**DILM9-01 (...)**	**DILM12-10 (...)**	**DILM12-01 (...)**	**DILM15-10 (...)**	**DILM15-01 (...)**
	Article no.[1]	Article no.[1]	Article no.[1]	Article no.[1]	Article no.[1]	Article no.[1]	Article no.[1]	Article no.[1]
Standard voltages	See price list	See price list	See price list	See price list	See price list	See price list	See price list	See price list
24V DC	276565	276600	276705	276740	276845	276880	290073	290108
48V DC	276566	276601	276706	276741	276846	276881	–	–
110V DC	276568	276603	276708	276743	276848	276883	–	–
220V DC	276569	276604	276709	276744	276849	276884	–	–
Special voltages other than the already shown normal voltages[2]	See price list	See price list	See price list	See price list	See price list	See price list	See price list	See price list
...V DC (12-250V) [3]	276570	276605	276710	276745	276850	276885	290078	290113

Notes

[1] To obtain the article number for ordering, read under selected part number and actuating voltage from the table. devices with dual-voltage coils can be ordered under a single article no.
[2] With non-standard voltages the required actuating voltage from the defined range (...–...V) must be stated.
[3] Minimum order quantity 10 units

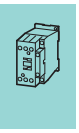

AC		**DILM17-10 (...)**	**DILM17-01 (...)**	**DILM25-10 (...)**	**DILM25-01 (...)**	**DILM32-10 (...)**	**DILM32-01 (...)**	**DILM38-10(...)**	**DILM38-01(...)**
		Article no.[1]	Article no.[1]	Article no.[1]	Article no.[1]	Article no.[1]	Article no.[1]	Article no.[1]	Article no.[1]
Standard voltages		See price list	See price list	See price list	See price list	See price list	See price list	See price list	See price list
24V 50Hz		276991	277023	277119	277151	277247	277279	112378	112446
240V 50Hz		276993	–	277121	–	277249	–	112420	–
42V 50Hz 48V 60Hz		277000	–	277128	–	277256	–	112424	–
110V 50Hz 120V 60Hz		277001	277033	277129	277161	277257	277289	112425	112454
190V 50Hz 220V 60Hz		277002	–	277130	–	277258	–	112426	–
220V 50Hz 240V 60Hz		277003	–	277131	–	277259	–	112427	–
230V 50Hz 240V 60Hz		277004	277036	277132	277164	277260	277292	112428	112457
380V 50Hz 440V 60Hz		277005	–	277133	–	277261	–	112429	–
400V 50Hz 440V 60Hz		277006	277038	277134	277166	277262	277294	112430	112459
415V 50Hz 480V 60Hz		277007	–	277135	–	277263	–	112431	–
24V 50Hz/60Hz		277008	277040	277136	277168	277264	277296	112432	112461
42V 50Hz/60Hz		277009	–	277137	–	277265	–	112433	–
110V 50Hz/60Hz		277010	277042	277138	277170	277266	277298	112434	112463
220V 50Hz/60Hz		277011	277043	277139	277171	277267	277299	112435	112464
230V 50Hz/60Hz		277012	277044	277140	277172	277268	277300	112436	112465
Special voltages other than the already shown normal voltages [2]		See price list	See price list	See price list	See price list	See price list	See price list	See price list	See price list
...V 50Hz (24 – 600V)		277016 [7]	277048 [7]	277144 [7]	277176 [7]	277272 [7]	277304 [8]	112440 [7]	112468 [7]
...V 60Hz (24 – 600V)		277017 [7]	277049 [7]	277145 [7]	277177 [7]	277273 [7]	277305 [8]	112441 [7]	112469 [7]
DC		**DILM17-10(...)**	**DILM17-01(...)**	**DILM25-10(...)**	**DILM25-01(...)**	**DILM32-10(...)**	**DILM32-01(...)**	**DILM38-10(...)**	**DILM38-01(...)**
		Article no.[1]	Article no.[1]	Article no.[1]	Article no.[1]	Article no.[1]	Article no.[1]	Article no.[1]	Article no.[1]
Standard voltages		See price list	See price list	See price list	See price list	See price list	See price list	See price list	See price list
RDC 24 [3]		277018	277050	277146	277178	277274	277306	112442	112470
RDC 60 [4]		277019	277051	277147	277179	277275	277307	112443	112471
RDC 130 [5]		277020	277052	277148	277180	277276	277308	112444	112472
RDC 240 [6]		277021	277053	277149	277181	277277	277309	112445	112473

Notes

[1] To obtain the article number for ordering, read under selected part number and actuating voltage from the table. devices with dual-voltage coils can be ordered under a single article no.
[2] With non-standard voltages the required actuating voltage from the defined range (...–...V) must be stated.
[3] 24 – 27 V DC
[4] 48 – 60 V DC
[5] 110 – 130 V DC
[6] 200 – 240 V DC
[7] Minimum order quantity 10 units
[8] Minimum order quantity 5 units

AC		**DILM40(...)**	**DILM50(...)**	**DILM65(...)**	**DILM72(...)**
		Article no.[1]	Article no.[1]	Article no.[1]	Article no.[1]
Standard voltages		See price list	See price list	See price list	See price list
24V 50Hz		277753	277817	277881	–
240V 50Hz		277755	277819	277883	109183
42V 50Hz **48V 60Hz**		277762	277826	277890	–
110V 50Hz **120V 60Hz**		277763	277827	277891	109191
190V 50Hz **220V 60Hz**		277764	277828	277892	–
220V 50Hz **240V 60Hz**		277765	277829	277893	–
230V 50Hz **240V 60Hz**		277766	277830	277894	107670
380V 50Hz **440V 60Hz**		277767	277831	277895	–
400V 50Hz **440V 60Hz**		277768	277832	277896	109195
415V 50Hz **480V 60Hz**		277769	277833	277897	–
24V 50Hz/60Hz		277770	277834	277898	109197
42V 50Hz/60Hz		277771	277835	277899	–
110V 50Hz/60Hz		277772	277836	277900	109199
220V 50Hz/60Hz		277773	277837	277901	109200
230V 50Hz/60Hz		277774	277838	277902	109201
Special voltages other than the already shown normal voltages [2]		See price list	See price list	See price list	See price list
...V 50Hz (24 – 600V)		277778 [8]	277842 [8]	277906 [8]	109205 [7]
...V 60Hz (24 – 600V)		277779 [8]	277843 [8]	277907 [8]	109206 [7]
DC		**DILM40(...)**	**DILM50(...)**	**DILM65(...)**	**DILM72(...)**
		Article no.[1]	Article no.[1]	Article no.[1]	Article no.[1]
Standard voltages		See price list	See price list	See price list	See price list
RDC 24 [3]		277780	277844	277908	107671
RDC 60 [4]		277781	277845	277909	–
RDC 130 [5]		277782	277846	277910	–
RDC 240 [6]		277783	277847	277911	109209

Notes

1) To obtain the article number for ordering, read under selected part number and actuating voltage from the table.
devices with dual-voltage coils can be ordered under a single article no.
2) With non-standard voltages the required actuating voltage from the defined range (...–...V) must be stated.
3) 24 – 27 V DC
4) 48 – 60 V DC
5) 110 – 130 V DC
6) 200 – 240 V DC
7) Minimum order quantity 10 units

DILM

HPL05076EN



AC		DILM80 (...)	DILM95 (...)
		Article no.[1]	Article no.[1]
Standard voltages		See price list	See price list
24 V 50 Hz		235904	239467
240V 50Hz		235910	239469
42V 50Hz 48V 60Hz		239394	239476
110V 50Hz 120V 60Hz		239399	239477
190V 50Hz 220V 60Hz		239400	239478
220V 50Hz 240V 60Hz		239401	239479
230V 50Hz 240V 60Hz		239402	239480
380V 50Hz 440V 60Hz		239403	239481
400V 50Hz 440V 60Hz		239404	239482
415V 50Hz 480V 60Hz		239405	239483
24V 50Hz/60Hz		239406	239484
42V 50Hz/60Hz		239407	239485
110V 50Hz/60Hz		239408	239486
220V 50Hz/60Hz		239409	239487
230V 50Hz/60Hz		239410	239488
Special voltages other than the already shown normal voltages [2]		See price list	See price list
...V 50Hz (24 – 600V) [13]		239414	239504
...V 60Hz (24 – 600V) [13]		239415	239509

DC		DILM80 (...)	DILM95 (...)
		Article no.[1]	Article no.[1]
Standard voltages		See price list	See price list
RDC 24[3]		239416	239510
RDC 60[4]		239417	239511
RDC 130[5]		239418	239512
RDC 240[6]		239419	239513

AC		DILM115 (...)	DILM150 (...)	DILM170 (...)	DILM185A/22(...)	DILM225A/22(...)
		Article no.[1]	Article no.[1]	Article no.[1]	Article no.[1]	Article no.[1]
Standard voltages		See price list	See price list	See price list	See price list	See price list
RAC 24[7]		239545	239585	107010	139534	139544
RAC 48[8]		239546	239586	107011	139535	139545
RAC 120[9]		239547	239587	107012	139536	139546
RAC 240[10]		239548	239588	107013	139537	139547
RAC 440[11]		239549	239589	107014	139538	139548
RAC 500[12]		239550	239590	107015	139539	139549

DC		DILM115 (...)	DILM150 (...)	DILM170 (...)	DILM185A/22(...)	DILM225A/22(...)
		Article no.[1]	Article no.[1]	Article no.[1]	Article no.[1]	Article no.[1]
Standard voltages		See price list	See price list	See price list	See price list	See price list
RDC 24[3]		239555	239591	107016	139540	139550
RDC 60[4]		239560	239592	107017	139541	139551
RDC 130[5]		239567	239593	107018	139542	139552
RDC 240[6]		239572	239594	107019	139543	139553

Notes

1) The article no. results from combining the part no. and the actuating voltage.
Devices with dual-voltage coils must be ordered under a single article no.
2) With non-standard voltages the required actuating voltage from the defined range (...–...V) must be stated.
3) 24 - 27 V DC
4) 48 – 60 V DC
5) 110 - 130 V DC
6) 200 - 240 V DC
7) 24 V 50/60 Hz
8) 42 – 48 V 50/60 Hz
9) 100 – 120 V 50/60 Hz
10) 190 – 240 V 50/60 Hz
11) 380 – 440 V 50/60 Hz
12) 480 – 500 V 50/60 Hz
13) Minimum order quantity 5 units