Modicon TM5

Digital I/O Modules Hardware Guide

04/2014



EIO0000000444.06

www.schneider-electric.com

Schneider Electric

The information provided in this documentation contains general descriptions and/or technical characteristics of the performance of the products contained herein. This documentation is not intended as a substitute for and is not to be used for determining suitability or reliability of these products for specific user applications. It is the duty of any such user or integrator to perform the appropriate and complete risk analysis, evaluation and testing of the products with respect to the relevant specific application or use thereof. Neither Schneider Electric nor any of its affiliates or subsidiaries shall be responsible or liable for misuse of the information contained herein. If you have any suggestions for improvements or amendments or have found errors in this publication, please notify us.

No part of this document may be reproduced in any form or by any means, electronic or mechanical, including photocopying, without express written permission of Schneider Electric.

All pertinent state, regional, and local safety regulations must be observed when installing and using this product. For reasons of safety and to help ensure compliance with documented system data, only the manufacturer should perform repairs to components.

When devices are used for applications with technical safety requirements, the relevant instructions must be followed.

Failure to use Schneider Electric software or approved software with our hardware products may result in injury, harm, or improper operating results.

Failure to observe this information can result in injury or equipment damage.

© 2014 Schneider Electric. All rights reserved.

Table of Contents

	Safety Information	**7**
	About the Book	**9**
Part I	**TM5 Digital I/O General Overview**	**13**
Chapter 1	**TM5 System General Rules for Implementing**	**15**
	Installation and Maintenance Requirements	16
	Wiring Best Practices	19
	Environmental Characteristics	25
	Installation Guidelines	28
	Hot Swapping Electronic Modules	29
Chapter 2	**TM5 Digital I/O General Overview**	**33**
	General Description	34
	Physical Description	36
Part II	**TM5 System Digital Input Electronic Modules**	**39**
Chapter 3	**TM5SDI2D Electronic Module 2DI 24 Vdc Sink 3 Wires**	**41**
	TM5SDI2D Presentation	42
	TM5SDI2D Characteristics	44
	TM5SDI2D Wiring Diagram	46
Chapter 4	**TM5SDI4D Electronic Module 4DI 24 Vdc Sink 3 Wires**	**47**
	TM5SDI4D Presentation	48
	TM5SDI4D Characteristics	50
	TM5SDI4D Wiring Diagram	52
Chapter 5	**TM5SDI6D Electronic Module 6DI 24 Vdc Sink 2 Wires**	**53**
	TM5SDI6D Presentation	54
	TM5SDI6D Characteristics	56
	TM5SDI6D Wiring Diagram	58
Chapter 6	**TM5SDI12D Electronic Module 12DI 24 Vdc Sink 1 Wire**	**61**
	TM5SDI12D Presentation	62
	TM5SDI12D Characteristics	64
	TM5SDI12D Wiring Diagram	66

Chapter 7 TM5SDI16D Electronic Module 16DI 24 Vdc Sink 1 Wire 69
TM5SDI16D Presentation 70
TM5SDI16D Characteristics 72
TM5SDI16D Wiring Diagram 75
Chapter 8 TM5SDI2DF Electronic Module 2DI 24 Vdc Sink 3 Wires 77
TM5SDI2DF Presentation 78
TM5SDI2DF Characteristics 80
TM5SDI2DF Wiring Diagram 83
Chapter 9 TM5SDI2A Electronic Module 2DI 100 ... 240 Vac 3 Wires 85
TM5SDI2A Presentation 86
TM5SDI2A Characteristics 88
TM5SDI2A Wiring Diagram 90
Chapter 10 TM5SDI4A Electronic Module 4DI 100 ... 240 Vac 2 Wires 93
TM5SDI4A Presentation 94
TM5SDI4A Characteristics 96
TM5SDI4A Wiring Diagram 98
Chapter 11 TM5SDI6U Electronic Module 6DI 100 ... 120 Vac 1 Wire 101
TM5SDI6U Presentation 102
TM5SDI6U Characteristics 104
TM5SDI6U Wiring Diagram 106
Part III TM5 System Digital Output Electronic Modules . 107
Chapter 12 TM5SDO2T Electronic Module 2DO 24 Vdc Tr 0.5 A 3 Wires 109
TM5SDO2T Presentation 110
TM5SDO2T Characteristics 113
TM5SDO2T Wiring Diagram 116
Chapter 13 TM5SDO4T Electronic Module 4DO 24 Vdc Tr 0.5 A 3 Wires 119
TM5SDO4T Presentation 120
TM5SDO4T Characteristics 123
TM5SDO4T Wiring Diagram 126

Chapter 14 TM5SDO4TA Electronic Module 4DO 24 Vdc Tr 2 A 3 Wires 129
TM5SDO4TA Presentation 130
TM5SDO4TA Characteristics 133
TM5SDO4TA Wiring Diagram 136
Chapter 15 TM5SDO6T Electronic Module 6DO 24 Vdc Tr 0.5 A 2 Wires 139
TM5SDO6T Presentation 140
TM5SDO6T Characteristics 143
TM5SDO6T Wiring Diagram 146
Chapter 16 TM5SDO8TA Electronic Module 8DO 24 Vdc Tr 2 A 1 Wire 147
TM5SDO8TA Presentation 148
TM5SDO8TA Characteristics 151
TM5SDO8TA Wiring Diagram 155
Chapter 17 TM5SDO12T Electronic Module 12DO 24 Vdc Tr 0.5 A 1 Wire 157
TM5SDO12T Presentation 158
TM5SDO12T Characteristics 161
TM5SDO12T Wiring Diagram 164
Chapter 18 TM5SDO16T Electronic Module 16DO 24 Vdc Tr 0.5 A 1 Wire 167
TM5SDO16T Presentation 168
TM5SDO16T Characteristics 170
TM5SDO16T Wiring Diagram 174
Chapter 19 TM5SDO2R Electronic Module 2DO 30 Vdc/230 Vac 5A Relay C/O 177
TM5SDO2R Presentation 178
TM5SDO2R Characteristics 180
TM5SDO2R Wiring Diagram 183
Chapter 20 TM5SDO4R Electronic Module 4DO 30 Vdc / 230 Vac 5 A Relay N/O 185
TM5SDO4R Presentation 186
TM5SDO4R Characteristics 188
TM5SDO4R Wiring Diagram 191

Chapter 21 TM5SDO2S Electronic Module 2DO 240 Vac Triac 1 A 3 Wires 193
TM5SDO2S Presentation 194
TM5SDO2S Characteristics 196
TM5SDO2S Wiring Diagram 198
Part IV TM5 System Digital Mixed Input/Output 201
Chapter 22 TM5SDM12DT Electronic Module 8DI/4DO 24 Vdc Tr 0.5 A 1 Wire 203
TM5SDM12DT Presentation 204
TM5SDM12DT Characteristics 207
TM5SDM12DT Wiring Diagram 211
Chapter 23 TM5SMM6D2L Electronic Module 4DI/2DO 24Vdc Tr 0.5A / 1AI/1AO ±10V/0-20mA 12 Bits 213
TM5SMM6D2L Presentation 214
TM5SMM6D2L Characteristics 217
TM5SMM6D2L Wiring Diagram 223
Glossary 227
Index 231

Safety Information

Important Information

NOTICE

Read these instructions carefully, and look at the equipment to become familiar with the device before trying to install, operate, or maintain it. The following special messages may appear throughout this documentation or on the equipment to warn of potential hazards or to call attention to information that clarifies or simplifies a procedure.



The addition of this symbol to a Danger safety label indicates that an electrical hazard exists, which will result in personal injury if the instructions are not followed.



This is the safety alert symbol. It is used to alert you to potential personal injury hazards. Obey all safety messages that follow this symbol to avoid possible injury or death.

⚠ DANGER

DANGER indicates an imminently hazardous situation which, if not avoided, **will result in** death or serious injury.

⚠ WARNING

WARNING indicates a potentially hazardous situation which, if not avoided, **can result in** death or serious injury.

⚠ CAUTION

CAUTION indicates a potentially hazardous situation which, if not avoided, **can result in** minor or moderate injury.

NOTICE

NOTICE is used to address practices not related to physical injury.

PLEASE NOTE

Electrical equipment should be installed, operated, serviced, and maintained only by qualified personnel. No responsibility is assumed by Schneider Electric for any consequences arising out of the use of this material.

A qualified person is one who has skills and knowledge related to the construction and operation of electrical equipment and its installation, and has received safety training to recognize and avoid the hazards involved.

About the Book

At a Glance

Document Scope

This manual describes the hardware implementation of the Modicon TM5 Digital I/O Modules. It provides parts descriptions, specifications, wiring diagrams, installation and setup for Modicon TM5 Digital I/O Modules.

Validity Note

This document has been updated with the release of SoMachine V4.0.

The technical characteristics of the devices described in this document also appear online. To access this information online:

Step	Action
1	Go to the Schneider Electric home page *www.schneider-electric.com*.
2	In the **Search** box type the reference of a product or the name of a product range. ● Do not include blank spaces in the model number/product range. ● To get information on grouping similar modules, use asterisks (*).
3	If you entered a reference, go to the **Product datasheets** search results and click on the reference that interests you. If you entered the name of a product range, go to the **Product Ranges** search results and click on the product range that interests you.
4	If more than one reference appears in the **Products** search results, click on the reference that interests you.
5	Depending on the size of your screen, you may need to scroll down to see the data sheet.
6	To save or print a data sheet as a .pdf file, click **Download XXX product datasheet**.

The characteristics that are presented in this manual should be the same as those characteristics that appear online. In line with our policy of constant improvement, we may revise content over time to improve clarity and accuracy. If you see a difference between the manual and online information, use the online information as your reference.

Related Documents

Title of Documentation	Reference Number
Modicon TM5 Expansion Modules Configuration Programming Guide	EIO0000000420 (Eng), EIO0000000421 (Fre), EIO0000000422 (Ger), EIO0000000423 (Spa), EIO0000000424 (Ita), EIO0000000425 (Chs)
Modicon Flexible TM5 / TM7 System - System Planning and Installation Guide	EIO0000000426 (Eng), EIO0000000427 (Fre), EIO0000000428 (Ger), EIO0000000429 (Spa), EIO0000000430 (Ita), EIO0000000431 (Chs)
TM5 DIO Modules Instruction Sheet	BBV56045

You can download these technical publications and other technical information from our website at www.schneider-electric.com.

Product Related Information

⚠ ⚠ DANGER

HAZARD OF ELECTRIC SHOCK, EXPLOSION OR ARC FLASH

- Disconnect all power from all equipment including connected devices prior to removing any covers or doors, or installing or removing any accessories, hardware, cables, or wires except under the specific conditions specified in the appropriate hardware guide for this equipment.
- Always use a properly rated voltage sensing device to confirm the power is off where and when indicated.
- Replace and secure all covers, accessories, hardware, cables, and wires and confirm that a proper ground connection exists before applying power to the unit.
- Use only the specified voltage when operating this equipment and any associated products.

Failure to follow these instructions will result in death or serious injury.

⚠ DANGER

POTENTIAL FOR EXPLOSION

- Only use this equipment in non-hazardous locations, or in locations that comply with Class I, Division 2, Groups A, B, C and D.
- Do not substitute components which would impair compliance to Class I Division 2.
- Do not connect or disconnect equipment unless power has been removed or the location is known to be non-hazardous.

Failure to follow these instructions will result in death or serious injury.

⚠ WARNING

LOSS OF CONTROL

- The designer of any control scheme must consider the potential failure modes of control paths and, for certain critical control functions, provide a means to achieve a safe state during and after a path failure. Examples of critical control functions are emergency stop and overtravel stop, power outage and restart.
- Separate or redundant control paths must be provided for critical control functions.
- System control paths may include communication links. Consideration must be given to the implications of unanticipated transmission delays or failures of the link.
- Observe all accident prevention regulations and local safety guidelines.[1]
- Each implementation of this equipment must be individually and thoroughly tested for proper operation before being placed into service.

Failure to follow these instructions can result in death, serious injury, or equipment damage.

[1] For additional information, refer to NEMA ICS 1.1 (latest edition), "Safety Guidelines for the Application, Installation, and Maintenance of Solid State Control" and to NEMA ICS 7.1 (latest edition), "Safety Standards for Construction and Guide for Selection, Installation and Operation of Adjustable-Speed Drive Systems" or their equivalent governing your particular location.

⚠ WARNING

UNINTENDED EQUIPMENT OPERATION

- Only use software approved by Schneider Electric for use with this equipment.
- Update your application program every time you change the physical hardware configuration.

Failure to follow these instructions can result in death, serious injury, or equipment damage.

Part I
TM5 Digital I/O General Overview

What Is in This Part?

This part contains the following chapters:

Chapter	Chapter Name	Page
1	TM5 System General Rules for Implementing	15
2	TM5 Digital I/O General Overview	33

Chapter 1
TM5 System General Rules for Implementing

What Is in This Chapter?

This chapter contains the following topics:

Topic	Page
Installation and Maintenance Requirements	16
Wiring Best Practices	19
Environmental Characteristics	25
Installation Guidelines	28
Hot Swapping Electronic Modules	29

Installation and Maintenance Requirements

Before Starting

The use and application of the information contained herein require expertise in the design and programming of automated control systems. Only you, the user, machine builder or integrator, can be aware of all the conditions and factors present during installation and setup, operation, and maintenance of the machine or process, and can therefore determine the automation and associated equipment and the related safeties and interlocks which can be effectively and properly used. When selecting automation and control equipment, and any other related equipment or software, for a particular application, you must also consider any applicable local, regional or national standards and/or regulations.

Pay particular attention in conforming to any safety information, different electrical requirements, and normative standards that would apply to your machine or process in the use of this equipment.

Read and understand this chapter before beginning the installation of your TM5 System.

⚠ ⚠ DANGER

HAZARD OF ELECTRIC SHOCK, EXPLOSION OR ARC FLASH

- Disconnect all power from all equipment including connected devices prior to removing any covers or doors, or installing or removing any accessories, hardware, cables, or wires except under the specific conditions specified in the appropriate hardware guide for this equipment.
- Always use a properly rated voltage sensing device to confirm the power is off where and when indicated.
- Replace and secure all covers, accessories, hardware, cables, and wires and confirm that a proper ground connection exists before applying power to the unit.
- Use only the specified voltage when operating this equipment and any associated products.

Failure to follow these instructions will result in death or serious injury.

NOTICE

ELECTROSTATIC DISCHARGE

- Store all components in their protective packaging until immediately before assembly.
- Never touch exposed conductive parts such as contacts or terminals.

Failure to follow these instructions can result in equipment damage.

Disconnecting Power

All options and modules should be assembled and installed before installing the control system on a mounting rail, onto a mounting plate or in a panel. Remove the control system from its mounting rail, mounting plate or panel before disassembling the equipment.

⚠⚠ DANGER

HAZARD OF ELECTRIC SHOCK, EXPLOSION OR ARC FLASH

- Disconnect all power from all equipment including connected devices prior to removing any covers or doors, or installing or removing any accessories, hardware, cables, or wires except under the specific conditions specified in the appropriate hardware guide for this equipment.
- Always use a properly rated voltage sensing device to confirm the power is off where and when indicated.
- Replace and secure all covers, accessories, hardware, cables, and wires and confirm that a proper ground connection exists before applying power to the unit.
- Use only the specified voltage when operating this equipment and any associated products.

Failure to follow these instructions will result in death or serious injury.

Programming Considerations

⚠ WARNING

UNINTENDED EQUIPMENT OPERATION

- Only use software approved by Schneider Electric for use with this equipment.
- Update your application program every time you change the physical hardware configuration.

Failure to follow these instructions can result in death, serious injury, or equipment damage.

Operating Environment

⚠ DANGER

POTENTIAL FOR EXPLOSION

- Only use this equipment in non-hazardous locations, or in locations that comply with Class I, Division 2, Groups A, B, C and D.
- Do not substitute components which would impair compliance to Class I Division 2.
- Do not connect or disconnect equipment unless power has been removed or the location is known to be non-hazardous.

Failure to follow these instructions will result in death or serious injury.

⚠ WARNING

UNINTENDED EQUIPMENT OPERATION

Install and operate this equipment according to the conditions described in the Environmental Characteristics.

Failure to follow these instructions can result in death, serious injury, or equipment damage.

Installation Considerations

⚠ WARNING

UNINTENDED EQUIPMENT OPERATION

- Use appropriate safety interlocks where personnel and/or equipment hazards exist.
- Install and operate this equipment in an enclosure appropriately rated for its intended environment.
- Use the sensor and actuator power supplies only for supplying power to the sensors or actuators connected to the module.
- Power line and output circuits must be wired and fused in compliance with local and national regulatory requirements for the rated current and voltage of the particular equipment.
- Do not use this equipment in safety-critical machine functions.
- Do not disassemble, repair, or modify this equipment.
- Do not connect any wiring to reserved, unused connections, or to connections designated as No Connection (N.C.).

Failure to follow these instructions can result in death, serious injury, or equipment damage.

NOTE: JDYX2 or JDYX8 fuse types are UL-recognized and CSA approved.

Wiring Best Practices

Introduction

There are several rules that must be followed when wiring the TM5 System.

Wiring Rules

⚠ ⚠ DANGER

HAZARD OF ELECTRIC SHOCK, EXPLOSION OR ARC FLASH

- Disconnect all power from all equipment including connected devices prior to removing any covers or doors, or installing or removing any accessories, hardware, cables, or wires except under the specific conditions specified in the appropriate hardware guide for this equipment.
- Always use a properly rated voltage sensing device to confirm the power is off where and when indicated.
- Replace and secure all covers, accessories, hardware, cables, and wires and confirm that a proper ground connection exists before applying power to the unit.
- Use only the specified voltage when operating this equipment and any associated products.

Failure to follow these instructions will result in death or serious injury.

The following rules must be applied when wiring the TM5 System:

- I/O and communication wiring must be kept separate from the power wiring. Route these 2 types of wiring in separate cable ducting.
- Verify that the operating conditions and environment are within the specification values.
- Use proper wire sizes to meet voltage and current requirements.
- Use copper conductors only.
- Use twisted pair, shielded cables for analog, expert, or fast I/O and TM5 bus signals.
- Use twisted pair, shielded cables for encoder, networks and fieldbus (CAN, serial, Ethernet).

Use shielded, properly grounded cables for all analog and high-speed inputs or outputs and communication connections. If you do not use shielded cable for these connections, electromagnetic interference can cause signal degradation. Degraded signals can cause the controller or attached modules and equipment to perform in an unintended manner.

⚠ WARNING

UNINTENDED EQUIPMENT OPERATION

- Use shielded cables for all fast I/O, analog I/O and communication signals.
- Ground cable shields for all analog I/O, fast I/O and communication signals at a single point[1].
- Route communication and I/O cables separately from power cables.

Failure to follow these instructions can result in death, serious injury, or equipment damage.

[1]Multipoint grounding is permissible if connections are made to an equipotential ground plane dimensioned to help avoid cable shield damage in the event of power system short-circuit currents.

Refer to the section Grounding the TM5 System *(see Modicon TM5 / TM7 Flexible System, System Planning and Installation Guide)* to ground the shielded cables.

This table provides the wire sizes to use with the removable spring terminal blocks (TM5ACTB06, TM5ACTB12, TM5ACTB12, TM5ACTB12PS, TM5ACTB32):

mm / in. 9 / 0.35				
mm²	0,08…2,5	0,25…2,5	0,25…1,5	2 x 0,25...2 x 0,75
AWG	28…14	24…14	24…16	2 x 24…2 x 18

This table provides the wire sizes to use with the TM5ACTB16 terminal blocks:

mm / in. 9 / 0.35			
mm²	0,08…1,5	0,25…1,5	0,25…0,75
AWG	28…16	24...16	24...20

⚠ DANGER

FIRE HAZARD

Use only the recommended wire sizes for the current capacity of the I/O channels and power supplies.

Failure to follow these instructions will result in death or serious injury.

The spring clamp connectors of the terminal block are designed for only one wire or one cable end. Two wires to the same connector must be installed with a double wire cable end to help prevent loosening.

⚠ DANGER

LOOSE WIRING CAUSES ELECTRIC SHOCK

Do not insert more than one wire per connector of the terminal block without a double wire cable end.

Failure to follow these instructions will result in death or serious injury.

Terminal Block

Plugging a terminal block into the incorrect electronic module can cause an electric shock or unintended operation of the application and/or damage the electronic module.

⚠ DANGER

UNINTENDED EQUIPMENT OPERATION OR ELECTRIC SHOCK

Connect the terminal blocks to their designated location.

Failure to follow these instructions will result in death or serious injury.

NOTE: To help prevent a terminal block from being inserted incorrectly, clearly and uniquely code and label each terminal block and electronic module according to the instructions in Coding the TM5 System *(see Modicon TM5 / TM7 Flexible System, System Planning and Installation Guide)*.

Stress Relief Using Cable Tie

There are 2 methods to reduce the stress on cables:

- The terminal blocks *(see Modicon TM5 / TM7 Flexible System, System Planning and Installation Guide)* have slots to attach cable ties. A cable tie can be fed through this slot to secure cables and wires to reduce stress between them and the terminal block connections.
- After grounding the TM5 System via the TM2XMTGB grounding plate *(see Modicon TM5 / TM7 Flexible System, System Planning and Installation Guide)*, wires can be bundled and fixed to the grounding plate tabs using wire ties to reduce stress on the cables.

This table provides the size of the cable tie and shows the 2 methods to reduce the stress on the cables:

Cable Tie Size	Terminal Block	TM2XMTGB Grounding Plate
Thickness	1.2 mm (0.05 in.) maximum	1.2 mm (0.05 in.)
Width	4 mm (0.16 in.) maximum	2.5...3 mm (0.1...0.12 in.)
Mounting illustration	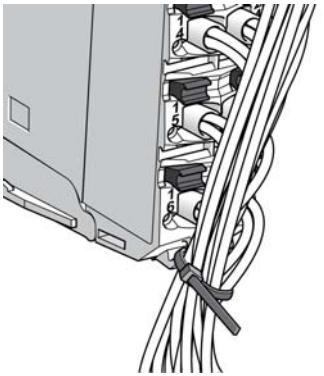	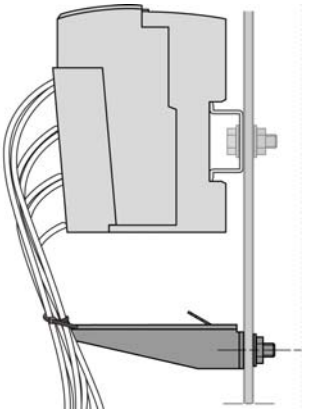

Protecting Outputs from Inductive Load Damage

Depending on the load, a protection circuit may be needed for the outputs on the controllers and certain modules. Inductive loads using DC voltages may create voltage reflections resulting in overshoot that will damage or shorten the life of output devices.

⚠ CAUTION

OUTPUT CIRCUIT DAMAGE DUE TO INDUCTIVE LOADS

Use an appropriate external protective circuit or device to reduce the risk of inductive direct current load damage.

Failure to follow these instructions can result in injury or equipment damage.

If your controller or module contains relay outputs, these types of outputs can support up to 240 Vac. Inductive damage to these types of outputs can result in welded contacts and loss of control. Each inductive load must include a protection device such as a peak limiter, RC circuit or flyback diode. Capacitive loads are not supported by these relays.

⚠ WARNING

RELAY OUTPUTS WELDED CLOSED

- Always protect relay outputs from inductive alternating current load damage using an appropriate external protective circuit or device.
- Do not connect relay outputs to capacitive loads.

Failure to follow these instructions can result in death, serious injury, or equipment damage.

Protective circuit A: this protection circuit can be used for both AC and DC load power circuits.

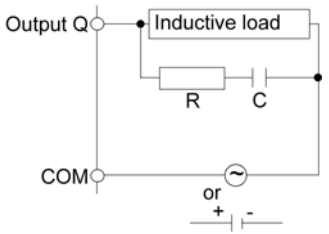

- C represents a value from 0.1 to 1 µF.
- R represents a resistor of approximately the same resistance value as the load.

Protective circuit B: this protection circuit can be used for DC load power circuits.

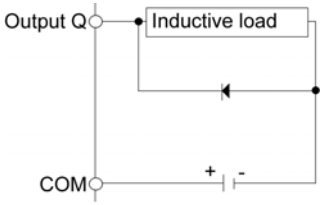

Use a diode with the following ratings:

- Reverse withstand voltage: power voltage of the load circuit x 10.
- Forward current: more than the load current.

Protective circuit C: this protection circuit can be used for both AC and DC load power circuits.

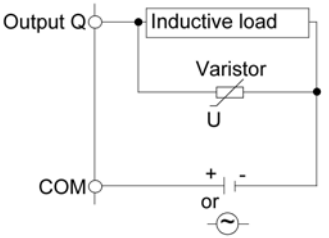

NOTICE

INOPERABLE EQUIPMENT

Verify that the continuous energy rating of the varistor exceeds the peak load energy by 20% or more in applications where the inductive load is power cycled frequently and/or rapidly.

Failure to follow these instructions can result in equipment damage.

Environmental Characteristics

Introduction

The following information describes the system-wide environmental requirements and characteristics for the TM5 System.

The general environmental characteristics are common to all components of the TM5 System.

Enclosure Requirements

TM5 components are designed as Zone B, Class A industrial equipment according to IEC/CISPR Publication 11. If they are used in environments other than those described in the standard, or in environments that do not meet the specifications in this manual, your ability to meet electromagnetic compatibility requirements in the presence of conducted and/or radiated interference may be reduced.

All TM5 components meet European Community (CE) requirements for open equipment as defined by EN61131-2. You must install them in an enclosure designed for the specific environmental conditions and to minimize the possibility of unintended contact with hazardous voltages. Your enclosure should be constructed of metal to improve the electromagnetic immunity of your TM5 System. Your enclosure should have a keyed locking mechanism to minimize unauthorized access.

Environmental Characteristics

This equipment meets UL, CSA, GOST-R and c-Tick certifications and CE requirements as indicated in the table below. This equipment is intended for use in a Pollution Degree 2 industrial environment.

The table below provides the general environmental characteristics:

Characteristic	Specification	
This product is compliant with Europe RoHS recommendations and China RoHS regulations. 		
Standard	IEC61131-2 ed. 3 2007	
Agencies	UL 508 CSA 22.2 No. 142-M1987 CSA 22.2 No. 213-M1987	
Ambient operating temperature	Horizontal installation	-10...60 °C (14...140 °F)[1, 2]
	Vertical installation	-10...50 °C (14...122 °F)[2]
Storage temperature		-40...70 °C (-40...158 °F)
Relative humidity		5...95% (non-condensing)
Degree of pollution	IEC60664	2
Degree of protection	IEC61131-2	IP20
Corrosion immunity		No
Operating altitude		0...2000 m (0...6.560 ft.)
Storage altitude		0...3000 m (0...9.842 ft.)
Vibration resistance	Mounted on a DIN rail	3.5 mm (0.138 in.) fixed amplitude from 5...8.4 Hz 9.8 m/s^2 (1 g_n) fixed acceleration from 8.4...150 Hz
Mechanical shock resistance		147 m/s^2 (15 g_n) for a duration of 11 ms
Connection type		Removable spring terminal block
Connector insertion/removal cycles		50

Note:

1 Some devices have temperature operating restrictions that require de-rating between 55 °C and 60 °C (131 °F and 140 °F), and may be subject to other possible restrictions. See the specific characteristics for your electronic module.

2 For compliance to Class I, Div 2 environment ratings, do not operate this device in locations with ambient temperatures less than 0 °C (32° F).

Electromagnetic Susceptibility

The table below provides the TM5 System electromagnetic susceptibility specifications:

Characteristic	Specification	Range
Electrostatic discharge	IEC/EN 61000-4-2	8 kV (air discharge) 4 kV (contact discharge)
Electromagnetic fields	IEC/EN 61000-4-3	10 V/m (80 MHz...2 GHz) 1 V/m (2...2.7 GHz)
Fast transients burst	IEC/EN 61000-4-4	Power lines: 2 kV I/O: 1 kV Shielded cable: 1 kV Repetition rate: 5 and 100 KHz
Surge immunity 24 Vdc circuit	IEC/EN 61000-4-5	1 kV in common mode 0.5 kV in differential mode
Surge immunity 230 Vac circuit		2 kV in common mode 1 kV in differential mode
Induced electromagnetic field	IEC/EN 61000-4-6	10 V_{eff} (0.15...80 MHz)
Conducted emission	EN 55011 (IEC/CISPR11)	150...500 kHz, quasi peak 79 dBµV
		500 kHz...30 MHz, quasi peak 73 dBµV
Radiated emission	EN 55011 (IEC/CISPR11)	30...230 MHz, 10 m@40 dBµV/m
		230 MHz...1 GHz, 10 m@47 dBµV/m

Installation Guidelines

Installation

The following table provides documentation references for spacing requirements and installation of electronic modules and accessories:

Spacing requirement	For mounting positions and minimum clearances, the electronic modules are mounted according to the rules defined for the controllers. Refer to the *Enclosing the TM5 System (see Modicon TM5 / TM7 Flexible System, System Planning and Installation Guide)*. **NOTE:** The TM5 System is designed to operate between - 10° C *(14 °F)* and 55° C *(131 °F)* without de-rating and up to 60° C *(140 °F)* with some special rules and some de-rating on some products.
Electronic modules installation	Refer to: ● *TM5 Association Table (see Modicon TM5 / TM7 Flexible System, System Planning and Installation Guide)*. ● *Expanding the TM5 System (see Modicon TM5 / TM7 Flexible System, System Planning and Installation Guide)*.
Accessories installation	Refer to the *Installation of Accessories (see Modicon TM5 / TM7 Flexible System, System Planning and Installation Guide)*.

Hot Swapping Electronic Modules

Definition

Hot swapping is the ability to remove an I/O electronic module from its bus base and then replace it with an identical electronic module while the TM5 System is under power without disrupting the normal operations of the controller. When the electronic module is returned to its bus base or replaced with another electronic module with the same reference, it starts to operate again.

Hot Swapping Considerations

Before initiating a hot swap operation, confirm that the electronic module type is approved for hot swapping *(see page 31)*.

When removing or inserting an I/O module while power is applied, remove and insert the electronic module by hand. Do not use tools to hot swap modules because they may come into contact with hazardous voltages. Also, remove any locking clips and the terminal block before removing the electronic module from its bus base. Hot swapping is only allowed when replacing identical electronic modules.

⚠ DANGER

EXPLOSION OR ELECTRIC SHOCK

- Only perform a hot swap operation in locations known and confirmed to be non-hazardous.
- Use only your hands.
- Do not use any metal tools.
- Do not disconnect any wires from the terminal block.
- Only replace an electronic module with an identical reference.

Failure to follow these instructions will result in death or serious injury.

NOTE: Only the electronic module is hot swap-able. Do not attempt a hot swap operation on the bus base, or on electronic modules that are integrated with their bus bases such as the compact I/O.

You need to understand and plan for the consequences of hot-swapping certain modules. Hot-swapping modules that control power distribution to other modules, for example, can impact your machine or process. Power Distribution modules, Interface Power Distribution Modules, Common Distribution modules, Field Bus Interface Modules, and Transmitter and Receiver modules all either distribute power or communications to other electronic modules. Disconnecting the connector to these modules will interrupt power or communications to the modules they service.

For example, some Power Distribution Modules (PDMs) provide power to both the TM5 power bus and 24 Vdc I/O power segment. It is possible that you may need to replace the PDM because one service is inoperable, but not both. In this case, hot-swapping the PDM would interrupt the service that is still operating, and would interrupt power to the modules drawing power from that service.

I/O configurations that employ Common Distribution modules require careful consideration when wiring is restricted by short wire lengths. It may be the case that in order to hot-swap an electronic module that has become inoperable, you need to disconnect the connector of the Common module servicing it. Further, that same Common module may be connected to modules or devices other than the module you wish to hot-swap. Disconnecting the Common module in this case would necessarily interrupt the supply to the unaffected modules and/or devices. Be sure that you know what I/O slices or devices are connected to the Common module, and the impact that this disconnection would have on your machine or process before attempting a hot-swap operation.

⚠ WARNING

LOSS OF CONTROL

- The designer of any control scheme must consider the potential failure modes of control paths and, for certain critical control functions, provide a means to achieve a safe state during and after a path failure. Examples of critical control functions are emergency stop and overtravel stop, power outage and restart.
- Separate or redundant control paths must be provided for critical control functions.
- System control paths may include communication links. Consideration must be given to the implications of unanticipated transmission delays or failures of the link.
- Observe all accident prevention regulations and local safety guidelines.[1]
- Each implementation of this equipment must be individually and thoroughly tested for proper operation before being placed into service.

Failure to follow these instructions can result in death, serious injury, or equipment damage.

[1] For additional information, refer to NEMA ICS 1.1 (latest edition), "Safety Guidelines for the Application, Installation, and Maintenance of Solid State Control" and to NEMA ICS 7.1 (latest edition), "Safety Standards for Construction and Guide for Selection, Installation and Operation of Adjustable-Speed Drive Systems" or their equivalent governing your particular location.

NOTE: Be sure you thoroughly understand the consequences of a hot-swap operation on all modules and connected devices as they relate to your machine or process.

Modules that are not Hot Swap-able

Electronic modules that can not be hot swapped under any circumstances include:

TM5	Electronic Modules Type	Reasons
Controller	PCI communication	The replacement of the PCI communication module requires a power cycle before it will recognized by the controller.
	Controller Power Distribution Module	These modules are not removable.
	Embedded I/O Modules	
Field bus interface	CANopen interface module	The replacement of the CANopen interface module depends on CANopen master architecture. Refer to the Generic CANopen Implementation Guide and documentation associated to the CANopen master.
Compact I/O	I/O modules	These modules are not removable.

Chapter 2
TM5 Digital I/O General Overview

What Is in This Chapter?

This chapter contains the following topics:

Topic	Page
General Description	34
Physical Description	36

General Description

Introduction

The range of digital electronic modules includes:

- digital input electronic modules,
- digital output electronic modules,
- mixed digital input/output electronic modules.

The TM5 digital input/output electronic modules need to be associated with a bus base and a terminal block. Every digital electronic module channel has a status LED.

Digital Input Electronic Modules Features

Digital inputs convert the electronic input signal into a binary value in the controller. The following table shows the digital input electronic modules features, with corresponding channel type and voltage/current:

Reference	Number of Channels	Voltage/current	Wiring	Signal type
TM5SDI2D *(see page 42)*	2	24 Vdc / 3.75 mA	3 wires	sink
TM5SDI4D *(see page 48)*	4	24 Vdc / 3.75 mA	3 wires	sink
TM5SDI6D *(see page 54)*	6	24 Vdc / 3.75 mA	2 wires	sink
TM5SDI12D *(see page 62)*	12	24 Vdc / 3.75 mA	1 wire	sink
TM5SDI16D *(see page 70)*	16	24 Vdc / 2.68 mA	1 wire	sink
TM5SDI2DF *(see page 78)*	2	24 Vdc / 10.5 mA	3 wires	sink
TM5SDI2A *(see page 86)*	2	100 ... 240 Vac	3 wires	NA
TM5SDI4A *(see page 94)*	4	100 ... 240 Vac	2 wires	NA
TM5SDI6U *(see page 102)*	6	100 ... 120 Vac	1 wire	NA

Digital Output and Mixed Electronic Modules Features

Digital outputs convert the binary value in the controller into an electronic output signal. The following table shows the digital output and mixed input/output electronic modules features with corresponding channel type and voltage/current:

Reference	Number of Channels	Voltage/current	Wiring	Signal type
Output electronic modules				
TM5SDO2T *(see page 110)*	2	24 Vdc / 0.5 A	3 wires	source
TM5SDO4T *(see page 120)*	4	24 Vdc / 0.5 A	3 wires	source
TM5SDO4TA *(see page 130)*	4	24 Vdc / 2 A	3 wires	source
TM5SDO6T *(see page 140)*	6	24 Vdc / 0.5 A	2 wires	source
TM5SDO8TA *(see page 148)*	8	24 Vdc / 2 A	1 wire	source
TM5SDO12T *(see page 158)*	12	24 Vdc / 0.5 A	1 wire	source
TM5SDO16T *(see page 168)*	16	24 Vdc / 0.5 A	1 wire	source
TM5SDO2R *(see page 178)*	2	30 Vdc / 230 Vac 5 A C/O	2 change over contacts relays	NA
TM5SDO4R *(see page 186)*	4	30 Vdc / 230 Vac 5 A N/O	4 normally open contacts relays	NA
TM5SDO2S *(see page 194)*	2	240 Vac / 1 A	3 wires	source
Mixed electronic modules				
TM5SDM12DT *(see page 204)*	8 inputs 4 outputs	24 Vdc / 7 mA 24 Vdc / 0.5 mA	1 wire	sink source
TM5SMM6D2L *(see page 204)*	4 digital inputs	24 Vdc / 3.3 mA	1 wire	sink
	2 digital outputs	24 Vdc / 0.5 A	1 wire	source
	1 analog input	-10...+10 Vdc 0...20 mA/4...20 mA	–	–
	1 analog input	-10...+10 Vdc 0...20 mA	–	–

Physical Description

Introduction

Each slice consists of three elements. These elements are the bus base, the electronic module and the terminal block.

Elements

The following illustration shows the elements of a slice.

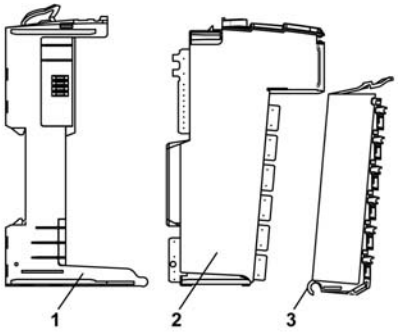

1. Bus base
2. Electronic module
3. Terminal block

When assembled the three components form an integral unit that resists vibration and electrostatic discharge.

NOTICE
ELECTROSTATIC DISCHARGE • Never touch the contacts of the electronic module. • Always keep the connector in place during normal operation. **Failure to follow these instructions can result in equipment damage.**

Dimensions

The following illustration shows the dimensions of a slice:

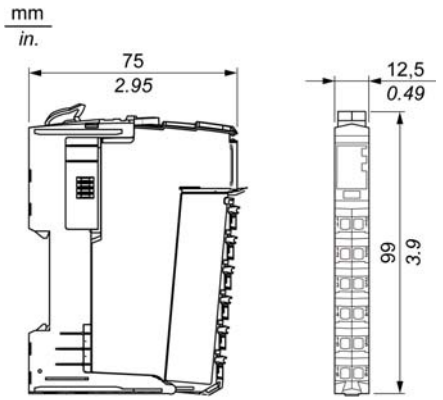

Pin Assignment

The following illustration shows the pin assignments respectively for the 6-pin, 12-pin and the 16-pin terminal blocks:

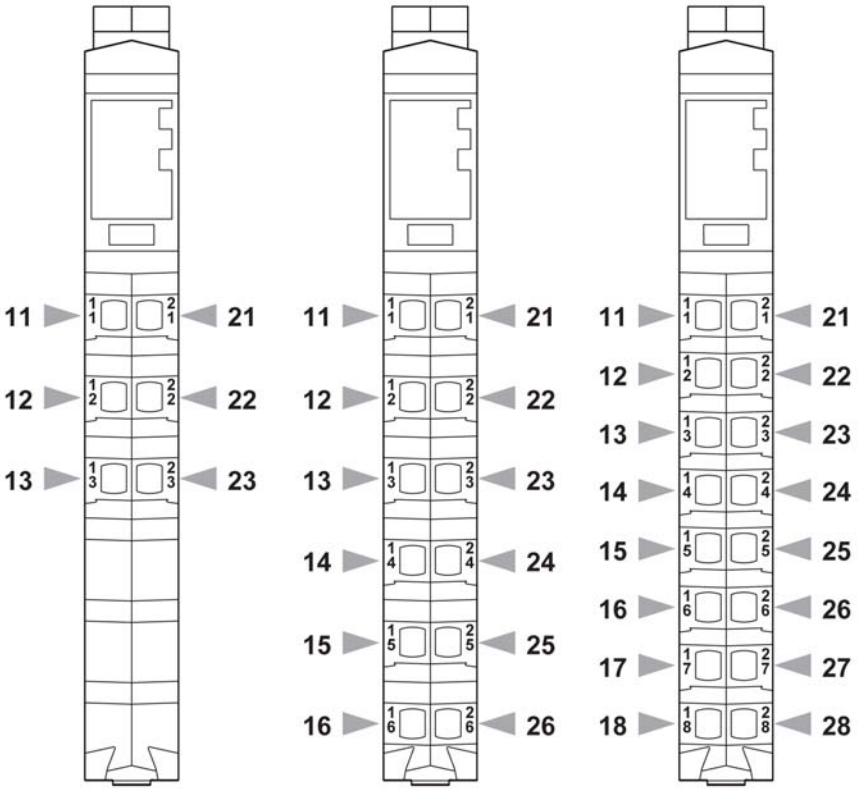

Accessories

Refer to the *Installation of Accessories (see Modicon TM5 / TM7 Flexible System, System Planning and Installation Guide)*.

Labeling

Refer to the *Labeling the* TM5 System *(see Modicon TM5 / TM7 Flexible System, System Planning and Installation Guide)*.

Part II
TM5 System Digital Input Electronic Modules

What Is in This Part?

This part contains the following chapters:

Chapter	Chapter Name	Page
3	TM5SDI2D Electronic Module 2DI 24 Vdc Sink 3 Wires	41
4	TM5SDI4D Electronic Module 4DI 24 Vdc Sink 3 Wires	47
5	TM5SDI6D Electronic Module 6DI 24 Vdc Sink 2 Wires	53
6	TM5SDI12D Electronic Module 12DI 24 Vdc Sink 1 Wire	61
7	TM5SDI16D Electronic Module 16DI 24 Vdc Sink 1 Wire	69
8	TM5SDI2DF Electronic Module 2DI 24 Vdc Sink 3 Wires	77
9	TM5SDI2A Electronic Module 2DI 100 ... 240 Vac 3 Wires	85
10	TM5SDI4A Electronic Module 4DI 100 ... 240 Vac 2 Wires	93
11	TM5SDI6U Electronic Module 6DI 100 ... 120 Vac 1 Wire	101

Chapter 3
TM5SDI2D Electronic Module 2DI 24 Vdc Sink 3 Wires

What Is in This Chapter?

This chapter contains the following topics:

Topic	Page
TM5SDI2D Presentation	42
TM5SDI2D Characteristics	44
TM5SDI2D Wiring Diagram	46

TM5SDI2D Presentation

Main Characteristics

The table below describes the main characteristics of the TM5SDI2D electronic module:

Main Characteristics	
Number of input channels	2
Input type	Type 1
Signal type	Sink
Rated input voltage	24 Vdc

Ordering Information

The illustration below shows the TM5SDI2D:

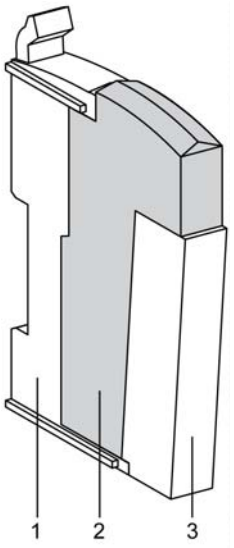

The table below shows the model numbers for the terminal blocks and the bus bases associated with the TM5SDI2D:

Number	Model Number	Description	Color
1	TM5ACBM11 or TM5ACBM15	Bus base Bus base with address setting	White White
2	TM5SDI2D	Electronic module	White
3	TM5ACTB06 or TM5ACTB12	Terminal block, 6 pins Terminal block, 12 pins	White White

NOTE: For more information, refer to *TM5 bus bases and terminal blocks (see Modicon TM5 / TM7 Flexible System, System Planning and Installation Guide)*.

Status LEDs

This illustration shows the TM5SDI2D status LEDs:

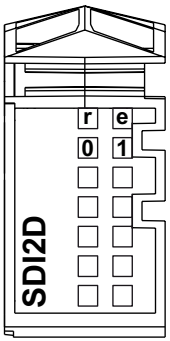

The table below shows the TM5SDI2D status LEDs:

LED	Color	Status	Description
r	Green	Off	No power supply
		Single flash	Reset state
		Flashing	Preoperational state
		On	Normal operation
e	Red	Off	OK or no power supply
e+r	Steady red/single green flash		Invalid firmware
0 - 1	Green	Off	Corresponding input deactivated
		On	Corresponding input activated

TM5SDI2D Characteristics

Introduction

This is the description characteristics for the TM5SDI2D electronic module. See also Environmental Characteristics *(see page 25)*.

⚠ DANGER

FIRE HAZARD

Use only the recommended wire sizes for the current capacity of the I/O channels and power supplies.

Failure to follow these instructions will result in death or serious injury.

⚠ WARNING

UNINTENDED EQUIPMENT OPERATION

Do not exceed any of the rated values specified in the environmental and electrical characteristics tables.

Failure to follow these instructions can result in death, serious injury, or equipment damage.

General Characteristics

The table below describes the general characteristics of the TM5SDI2D electronic module:

General Characteristics	
Rated power supply voltage Power supply source	24 Vdc Connected to the 24 Vdc I/O power segment
Power supply range	20.4...28.8 Vdc
24 Vdc I/O segment current draw	12 mA (all inputs On)
TM5 Bus 5 Vdc current draw	24 mA
Power dissipation	0.41 W max.
Weight	25 g (0.9 oz)
ID code for firmware update	7053 dec

Input Characteristics

The table describes the input characteristics of the TM5SDI2D electronic module:

Input Characteristics		
Number of input channels		2
Wiring type		1, 2 or 3 wires
Rated input voltage		24 Vdc
Input voltage range		20.4...28.8 Vdc
Rated input current at 24 Vdc		3.75 mA
Input impedance		6.4 kΩ
OFF state		5 Vdc max.
ON state		15 Vdc min.
Input filter	Hardware	≤100 µs
	Software	Default 1 ms, can be configured between 0 and 25 ms in 0.2 ms intervals.
Isolation	Between input and internal bus	See note [1].
	Between channels	Not isolated

[1] The isolation of the electronic module is 500 Vac RMS between the electronics powered by the TM5 bus and those powered by 24 Vdc I/O power segment connected to the module. In practice, the TM5 electronic module is installed in the bus base, and there is a bridge between the TM5 power bus and the 24 Vdc I/O power segment. The two power circuits reference the same functional ground (FE) through specific components designed to reduce effects of electromagnetic interference. These components are rated at 30 Vdc or 60 Vdc. This effectively reduces isolation of the entire system from the 500 Vac RMS.

Sensor Supply

The table describes the sensor supply of the TM5SDI2D electronic module:

Supply	
Voltage	Power segment supply less voltage drop for internal protection.
Voltage drop for internal protection at 500 mA	2 Vdc max
Sensor supply current (for all powered connected sensors)	500 mA
Internal protection	Overload and short-circuit

TM5SDI2D Wiring Diagram

Wiring Diagram

The following illustration shows the wiring diagram for the TM5SDI2D:

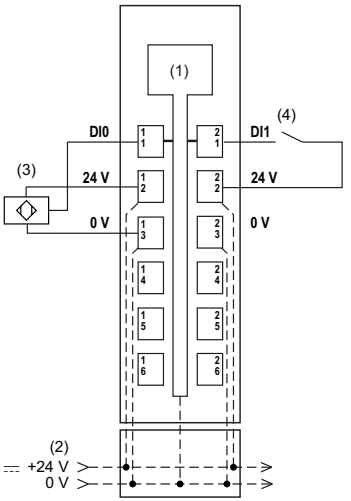

1 Internal electronics
2 24 Vdc I/O power segment integrated into the bus bases
3 3-wire sensor
4 2-wire sensor

⚠ WARNING

UNINTENDED EQUIPMENT OPERATION

Do not connect wires to unused terminals and/or terminals indicated as “No Connection (N.C.)”.

Failure to follow these instructions can result in death, serious injury, or equipment damage.

⚠ WARNING

UNINTENDED EQUIPMENT OPERATION

Use the sensor and actuator power supply only for supplying power to sensors or actuators connected to the module.

Failure to follow these instructions can result in death, serious injury, or equipment damage.

Chapter 4
TM5SDI4D Electronic Module 4DI 24 Vdc Sink 3 Wires

What Is in This Chapter?

This chapter contains the following topics:

Topic	Page
TM5SDI4D Presentation	48
TM5SDI4D Characteristics	50
TM5SDI4D Wiring Diagram	52

TM5SDI4D Presentation

Main Characteristics

The table below describes the main characteristics of the TM5SDI4D electronic module:

Main Characteristics	
Number of input channels	4
Input type	Type 1
Signal type	Sink
Rated input voltage	24 Vdc

Ordering Information

The following illustration shows the TM5SDI4D:

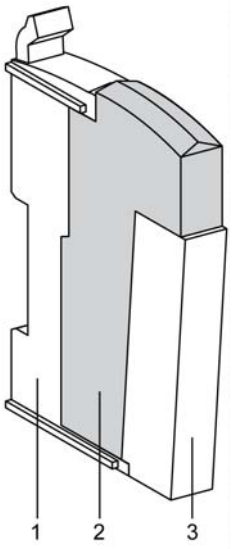

The table below shows the model numbers for the terminal blocks and the bus bases associated with the TM5SDI4D:

Number	Model Number	Description	Color
1	TM5ACBM11 or TM5ACBM15	Bus base Bus base with address setting	White White
2	TM5SDI4D	Electronic Module	White
3	TM5ACTB06 or TM5ACTB12	Terminal block, 6 pins Terminal block, 12 pins	White White

NOTE: For more information, refer to *TM5 bus bases and terminal blocks (see Modicon TM5 / TM7 Flexible System, System Planning and Installation Guide)*.

Status LEDs

The following illustration shows the LEDs for TM5SDI4D:

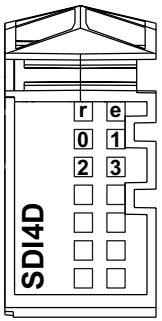

The table below shows the TM5SDI4D status LEDs:

LEDs	Color	Status	Description
r	Green	Off	No power supply
		Single Flash	Reset state
		Flashing	Preoperational state
		On	Normal operation
e	Red	Off	OK or no power supply
e+r	Steady red / single green flash		Invalid firmware
0 - 3	Green	Off	Corresponding input deactivated
		On	Corresponding input activated

TM5SDI4D Characteristics

Introduction

This is the description characteristics for the TM5SDI4D electronic module. See also Environmental Characteristics *(see page 25)*.

⚠ DANGER

FIRE HAZARD

Use only the recommended wire sizes for the current capacity of the I/O channels and power supplies.

Failure to follow these instructions will result in death or serious injury.

⚠ WARNING

UNINTENDED EQUIPMENT OPERATION

Do not exceed any of the rated values specified in the environmental and electrical characteristics tables.

Failure to follow these instructions can result in death, serious injury, or equipment damage.

General Characteristics

The table below describes the general characteristics of the TM5SDI4D electronic module:

General Characteristics	
Rated power supply voltage Power supply source	24 Vdc Connected to the 24 Vdc I/O power segment
Power supply range	20.4...28.8 Vdc
24 Vdc I/O segment current draw	25 mA (all inputs On)
TM5 Bus 5 Vdc current draw	28 mA
Power dissipation	0.73 W max.
Weight	25 g (0.9 oz)
ID code for firmware update	7058 dec

Input Characteristics

The table describes the input characteristics of the TM5SDI4D electronic module:

Input Characteristics		
Number of input channels		4
Wiring type		1, 2 or 3 wires
Rated input voltage		24 Vdc
Input voltage range		20.4...28.8 Vdc
Rated input current at 24 Vdc		3.75 mA
Input impedance		6.4 kΩ
OFF state		5 Vdc max.
ON state		15 Vdc min.
Input filter	Hardware	≤100 µs
	Software	Default 1 ms, can be configured between 0 and 25 ms in 0.2 ms intervals.
Isolation	Between input and internal bus	See note [1]
	Between channels	Not isolated

[1] The isolation of the electronic module is 500 Vac RMS between the electronics powered by the TM5 bus and those powered by 24 Vdc I/O power segment connected to the module. In practice, the TM5 electronic module is installed in the bus base, and there is a bridge between the TM5 power bus and the 24 Vdc I/O power segment. The two power circuits reference the same functional ground (FE) through specific components designed to reduce effects of electromagnetic interference. These components are rated at 30 Vdc or 60 Vdc. This effectively reduces isolation of the entire system from the 500 Vac RMS.

Sensor Supply

The table describes the sensor supply of the TM5SDI4D electronic module:

Supply	
Voltage	Power segment supply less voltage drop for internal protection.
Voltage drop for internal protection at 500 mA	2 Vdc max
Sensor supply current (for all powered connected sensors)	500 mA
Internal protection	Overload and short circuit

TM5SDI4D Wiring Diagram

Wiring Diagram

The following illustration shows the wiring diagram for the TM5SDI4D:

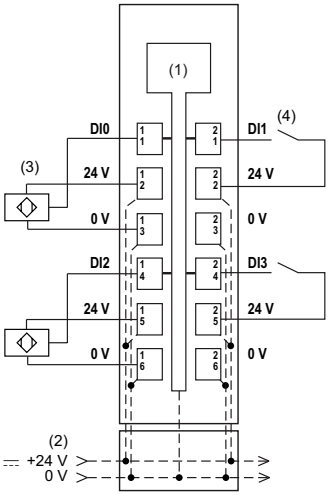

1 Internal electronics
2 24 Vdc I/O power segment integrated into the bus bases
3 3-wire sensor
4 2-wire sensor

⚠ WARNING

UNINTENDED EQUIPMENT OPERATION

Do not connect wires to unused terminals and/or terminals indicated as “No Connection (N.C.)”.

Failure to follow these instructions can result in death, serious injury, or equipment damage.

⚠ WARNING

UNINTENDED EQUIPMENT OPERATION

Use the sensor and actuator power supply only for supplying power to sensors or actuators connected to the module.

Failure to follow these instructions can result in death, serious injury, or equipment damage.

Chapter 5
TM5SDI6D Electronic Module 6DI 24 Vdc Sink 2 Wires

What Is in This Chapter?

This chapter contains the following topics:

Topic	Page
TM5SDI6D Presentation	54
TM5SDI6D Characteristics	56
TM5SDI6D Wiring Diagram	58

TM5SDI6D Presentation

Main Characteristics

The table below describes the main characteristics of the TM5SDI6D electronic module:

Main Characteristics	
Number of input channels	6
Input type	Type 1
Signal type	Sink
Rated input voltage	24 Vdc

Ordering Information

The following illustration shows the TM5SDI6D:

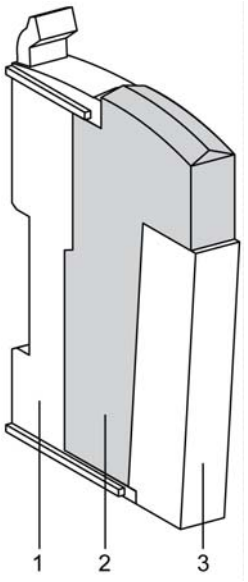

The table below shows the model numbers for the terminal blocks and the bus bases associated with the TM5SDI6D:

Number	Model Number	Description	Color
1	TM5ACBM11 or TM5ACBM15	Bus base Bus base with address setting	White White
2	TM5SDI6D	Electronic module	White
3	TM5ACTB06 or TM5ACTB12	Terminal block, 6 pins Terminal block, 12 pins	White White

NOTE: For more information, refer to *TM5 bus bases and terminal blocks (see Modicon TM5 / TM7 Flexible System, System Planning and Installation Guide)*.

Status LEDs

The following illustration shows the LEDs for TM5SDI6D:

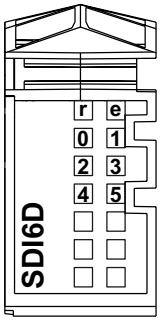

The table below shows theTM5SDI6D status LEDs:

LEDs	Color	Status	Description
r	Green	Off	No power supply
		Single Flash	Reset state
		Flashing	Preoperational state
		On	Normal operation
e	Red	Off	OK or no power supply
e+r	Steady red / single green flash		Invalid firmware
0 - 5	Green	Off	Corresponding input deactivated
		On	Corresponding input activated

TM5SDI6D Characteristics

Introduction

This is the description characteristics for the TM5SDI6D electronic module. See also Environmental Characteristics *(see page 25)*.

⚠ DANGER

FIRE HAZARD

Use only the recommended wire sizes for the current capacity of the I/O channels and power supplies.

Failure to follow these instructions will result in death or serious injury.

⚠ WARNING

UNINTENDED EQUIPMENT OPERATION

Do not exceed any of the rated values specified in the environmental and electrical characteristics tables.

Failure to follow these instructions can result in death, serious injury, or equipment damage.

General Characteristics

The table below describes the general characteristics of the TM5SDI6D electronic module:

General Characteristics	
Rated power supply voltage Power supply source	24 Vdc Connected to the 24 Vdc I/O power segment
Power supply range	20.4...28.8 Vdc
24 Vdc I/O segment current draw	37 mA (all inputs On)
TM5 Bus 5 Vdc current draw	30 mA
Power dissipation	1.03 W max.
Weight	25 g (0.9 oz)
ID code for firmware update	7059 dec

Input Characteristics

The table describes the input characteristics of the TM5SDI2D electronic module:

Input Characteristics		
Number of input channels		6
Wiring type		1 or 2 wires
Rated input voltage		24 Vdc
Input voltage range		20.4...28.8 Vdc
Rated input current at 24 Vdc		3.75 mA
Input impedance		6.4 kΩ
OFF state		5 Vdc max.
ON state		15 Vdc min.
Input filter	Hardware	≤100 µs
	Software	Default 1 ms, can be configured between 0 and 25 ms in 0.2 ms intervals.
Isolation	Between input and internal bus	See note [1]
	Between channels	Not isolated

[1] The isolation of the electronic module is 500 Vac RMS between the electronics powered by the TM5 bus and those powered by 24 Vdc I/O power segment connected to the module. In practice, the TM5 electronic module is installed in the bus base, and there is a bridge between the TM5 power bus and the 24 Vdc I/O power segment. The two power circuits reference the same functional ground (FE) through specific components designed to reduce effects of electromagnetic interference. These components are rated at 30 Vdc or 60 Vdc. This effectively reduces isolation of the entire system from the 500 Vac RMS.

TM5SDI6D Wiring Diagram

Wiring Diagram

The following illustration shows the wiring diagram for the TM5SDI6D:

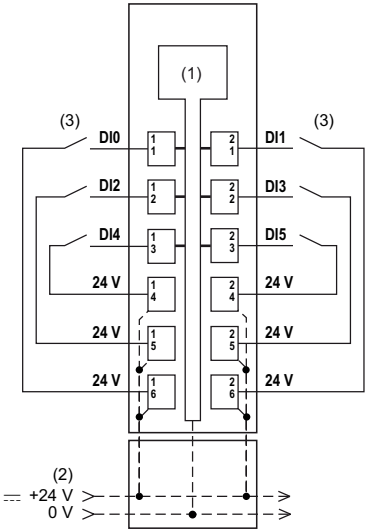

1 Internal electronics
2 24 Vdc I/O power segment integrated into the bus bases
3 2-wire sensor

The 6-input TM5SDI6D electronic module can independently support 2-wire devices. To connect 3-wire electronic sensors, you can add a TM5SPDG6D6F Common Distribution module.

The following illustration shows the wiring diagram for the TM5SPDG6D6F and a TM5SDI6D:

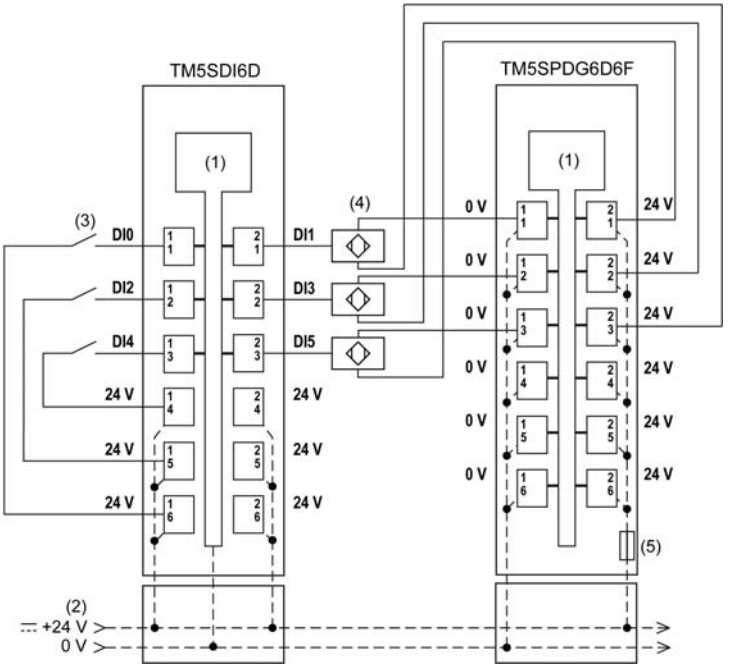

1 Internal electronics
2 24 Vdc I/O power segment integrated into the bus bases
3 2-wire sensor
4 3-wire sensor
5 Integrated fuse type T slow-blow 6.3 A 250 V exchangeable

⚠ WARNING

UNINTENDED EQUIPMENT OPERATION

Do not connect wires to unused terminals and/or terminals indicated as “No Connection (N.C.)”.

Failure to follow these instructions can result in death, serious injury, or equipment damage.

Chapter 6
TM5SDI12D Electronic Module 12DI 24 Vdc Sink 1 Wire

What Is in This Chapter?

This chapter contains the following topics:

Topic	Page
TM5SDI12D Presentation	62
TM5SDI12D Characteristics	64
TM5SDI12D Wiring Diagram	66

TM5SDI12D Presentation

Main Characteristics

The table below describes the main characteristics of the TM5SDI12D electronic module:

Main Characteristics	
Number of input channels	12
Input type	Type 1
Signal type	Sink
Rated input voltage	24 Vdc

Ordering Information

The following illustration shows the TM5SDI12D:

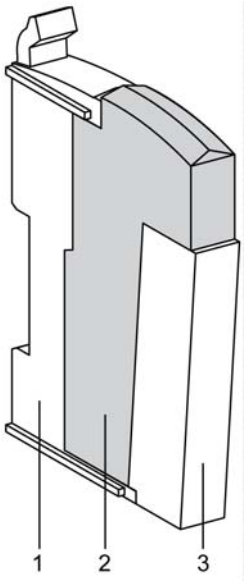

The table below shows the model numbers for the terminal block and the bus bases associated with the TM5SDI12D:

Number	Model Number	Description	Color
1	TM5ACBM11 or TM5ACBM15	Bus base Bus base with address setting	White White
2	TM5 SDI12D	Electronic Module	White
3	TM5ACTB12	Terminal block, 12 pins	White

NOTE: For more information, refer to *TM5 bus bases and terminal blocks (see Modicon TM5 / TM7 Flexible System, System Planning and Installation Guide)*.

Status LEDs

The following illustration shows the LEDs for TM5SDI12D:

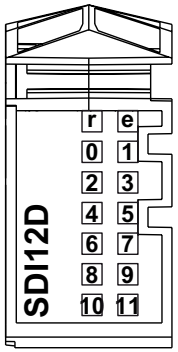

The table below shows the TM5SDI12D status LEDs:

LEDs	Color	Status	Description
r	Green	Off	No power supply
		Single Flash	Reset state
		Flashing	Preoperational state
		On	Normal operation
e	Red	Off	OK or no power supply
e+r	Steady red / single green flash		Invalid firmware
0 - 11	Green	Off	Corresponding input deactivated
		On	Corresponding input activated

TM5SDI12D Characteristics

Introduction

This is the description characteristics for the TM5SDI12D electronic module. See also Environmental Characteristics *(see page 25)*.

⚠ DANGER

FIRE HAZARD

Use only the recommended wire sizes for the current capacity of the I/O channels and power supplies.

Failure to follow these instructions will result in death or serious injury.

⚠ WARNING

UNINTENDED EQUIPMENT OPERATION

Do not exceed any of the rated values specified in the environmental and electrical characteristics tables.

Failure to follow these instructions can result in death, serious injury, or equipment damage.

General characteristics

The table below describes the general characteristics of the TM5SDI12D electronic module:

General Characteristics	
Rated power supply voltage Power supply source	24 Vdc Connected to the 24 Vdc I/O power segment
Power supply range	20.4...28.8 Vdc
24 Vdc I/O segment current draw	73 mA (all inputs On)
TM5 Bus 5 Vdc current draw	36 mA
Power dissipation	1.93 W max.
Weight	25 g (0.9 oz)
ID code for firmware update	7061 dec

Input Characteristics

The table describes the input characteristics of the TM5SDI12D electronic module:

Input Characteristics		
Number of input channels		12
Wiring type		1 wire
Rated input voltage		24 Vdc
Input voltage range		20.4...28.8 Vdc
De-rating	55...60 °C (131...140 °F)	11 channels
Rated input current at 24 Vdc		3.75 mA
Input impedance		6.4 kΩ
OFF state		5 Vdc max.
ON state		15 Vdc min.
Input filter	Hardware	≤100 µs
	Software	Default 1 ms, can be configured between 0 and 25 ms in 0.2 ms intervals.
Isolation	Between input and internal bus	See note [1]
	Between channels	Not isolated

[1] The isolation of the electronic module is 500 Vac RMS between the electronics powered by the TM5 bus and those powered by 24 Vdc I/O power segment connected to the module. In practice, the TM5 electronic module is installed in the bus base, and there is a bridge between the TM5 power bus and the 24 Vdc I/O power segment. The two power circuits reference the same functional ground (FE) through specific components designed to reduce effects of electromagnetic interference. These components are rated at 30 Vdc or 60 Vdc. This effectively reduces isolation of the entire system from the 500 Vac RMS.

TM5SDI12D Wiring Diagram

Wiring Diagram

The following illustration shows the wiring diagram for the TM5SDI12D:

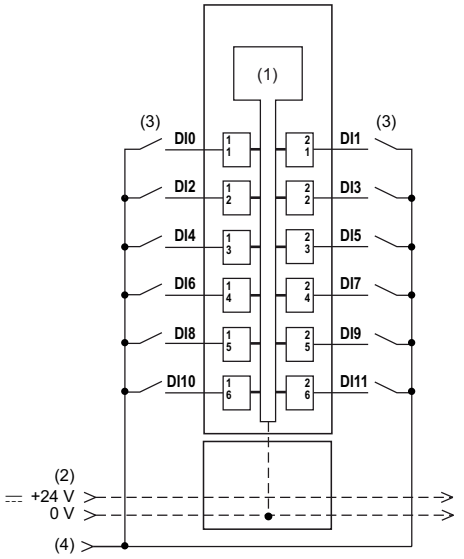

1 Internal electronics
2 24 Vdc I/O power segment integrated into the bus bases
3 2 wire-sensor
4 24 Vdc I/O power segment by external connection

NOTE: I/O electronic modules and the field devices connected to them must all reside on the same 24 Vdc I/O power segment. If not, the status LEDs may not function correctly. In addition, there may potentially be more significant consequences such as an explosion and/or fire hazard.

⚠ WARNING

POTENTIAL EXPLOSION OR FIRE

Connect the returns from the devices to the same power source as the 24 Vdc I/O power segment serving the module.

Failure to follow these instructions can result in death, serious injury, or equipment damage.

The 12-input TM5SDI12D electronic module can independently support 1-wire devices. To connect 2-wire devices, you can add a TM5SPDD12F Common Distribution module.

The following illustration shows the wiring diagram for the TM5SPDD12F and a TM5SDI12D:

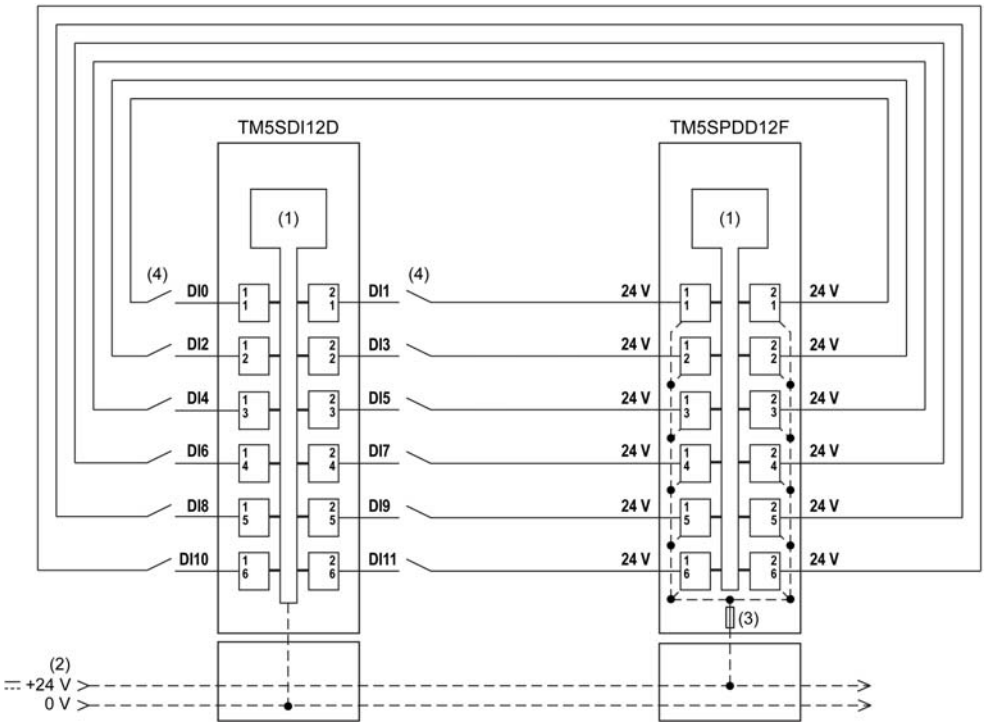

1 Internal electronics
2 24 Vdc I/O power segment integrated into the bus bases
3 Integrated fuse type T slow-blow 6.3 A 250 V exchangeable
4 2 wire-sensor

⚠ WARNING

UNINTENDED EQUIPMENT OPERATION

Do not connect wires to unused terminals and/or terminals indicated as “No Connection (N.C.)”.

Failure to follow these instructions can result in death, serious injury, or equipment damage.

Chapter 7
TM5SDI16D Electronic Module 16DI 24 Vdc Sink 1 Wire

What Is in This Chapter?

This chapter contains the following topics:

Topic	Page
TM5SDI16D Presentation	70
TM5SDI16D Characteristics	72
TM5SDI16D Wiring Diagram	75

TM5SDI16D Presentation

Main Characteristics

The table below describes the main characteristics of the TM5SDI16D electronic module:

Main Characteristics	
Number of input channels	16
Input type	Type 1
Signal type	Sink
Rated input voltage	24 Vdc

Ordering Information

The following illustration shows the TM5SDI16D:

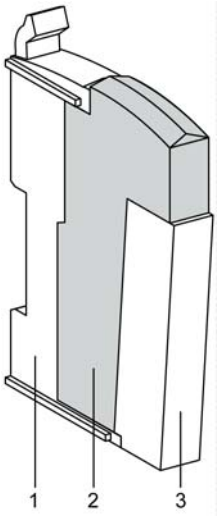

The table below shows the model numbers for the terminal block and the bus base associated with the TM5SDI16D:

Number	Model Number	Description	Color
1	TM5ACBM11	Bus base	White
2	TM5SDI16D	Electronic Module	White
3	TM5ACTB16	Terminal block, 16 pins	White

NOTE: For more information, refer to *TM5 bus bases and terminal blocks (see Modicon TM5 / TM7 Flexible System, System Planning and Installation Guide)*.

Status LEDs

The following illustration shows the LEDs for TM5SDI16D:

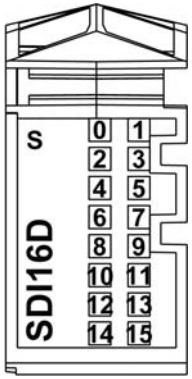

The table below shows the TM5SDI16D status LEDs:

LEDs	Color	Status	Description
s	Green	Off	No power supply
		Single Flash	Reset state
		Flashing	Preoperational state
		On	Normal operation
	Red	Off	OK or no power supply
	Steady red / single green flash		Invalid firmware
0 - 15	Green	Off	Corresponding input deactivated
		On	Corresponding input activated

TM5SDI16D Characteristics

Introduction

This is the description characteristics for the TM5SDI16D electronic module. See also Environmental Characteristics *(see page 25)*.

⚠ DANGER

FIRE HAZARD

Use only the recommended wire sizes for the current capacity of the I/O channels and power supplies.

Failure to follow these instructions will result in death or serious injury.

⚠ WARNING

UNINTENDED EQUIPMENT OPERATION

Do not exceed any of the rated values specified in the environmental and electrical characteristics tables.

Failure to follow these instructions can result in death, serious injury, or equipment damage.

General Characteristics

The table below describes the general characteristics of the TM5SDI16D electronic module:

General Characteristics	
Rated power supply voltage Power supply source	24 Vdc Connected to the 24 Vdc I/O power segment
Power supply range	20.4...28.8 Vdc
24 Vdc I/O segment current draw	61 mA (all inputs On)
TM5 Bus 5 Vdc current draw	36 mA
Power dissipation	1.65 W max.
Weight	21 g (0.7 oz)
ID code	56838 dec

Input Characteristics

The table describes the input characteristics of the TM5SDI16D electronic module:

Input Characteristics		
Number of input channels		16
Wiring type		1 wire
Rated input voltage		24 Vdc
Input voltage range		20.4...28.8 Vdc
De-rating		See section De-rating *(see page 74)*.
Rated input current at 24 Vdc		2.68 mA
Input impedance		8.9 kΩ
OFF state		5 Vdc max.
ON state		15 Vdc min.
Input filter	Hardware	≤100 µs
	Software	Default 1 ms, can be configured between 0 and 25 ms in 0.2 ms intervals.
Isolation	Between input and internal bus	See note [1]
	Between channels	Not isolated

[1] The isolation of the electronic module is 500 Vac RMS between the electronics powered by the TM5 bus and those powered by 24 Vdc I/O power segment connected to the module. In practice, the TM5 electronic module is installed in the bus base, and there is a bridge between the TM5 power bus and the 24 Vdc I/O power segment. The two power circuits reference the same functional ground (FE) through specific components designed to reduce effects of electromagnetic interference. These components are rated at 30 Vdc or 60 Vdc. This effectively reduces isolation of the entire system from the 500 Vac RMS.

De-rating of the TM5SDI16D

The following illustration shows the de-rating of simultaneity factor at 24 Vdc and 28.8 Vdc input voltage in vertical installation:

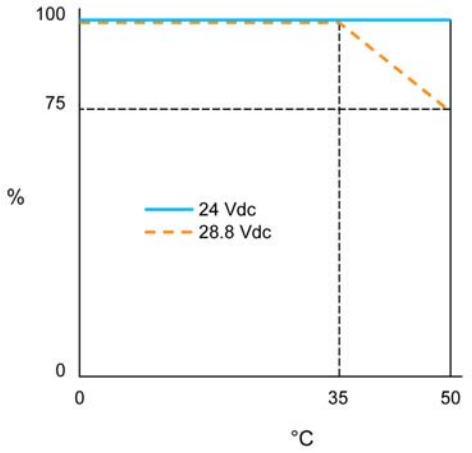

% Simultaneity factor
°**C** Ambient temperature

The following illustration shows the de-rating of simultaneity factor at 24 Vdc and 28.8 Vdc input voltage in horizontal installation:

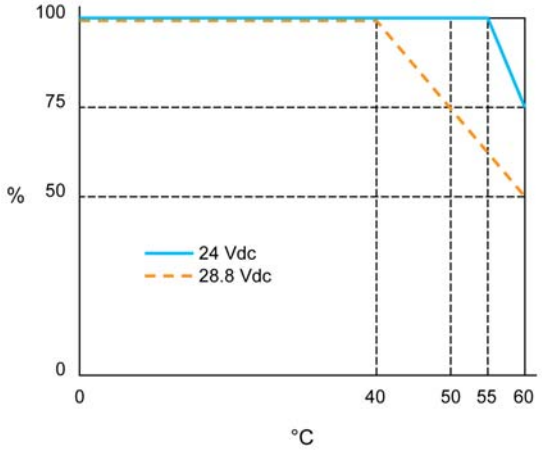

% Simultaneity factor
°**C** Ambient temperature

TM5SDI16D Wiring Diagram

Wiring Diagram

The following illustration shows the wiring diagram for the TM5SDI16D:

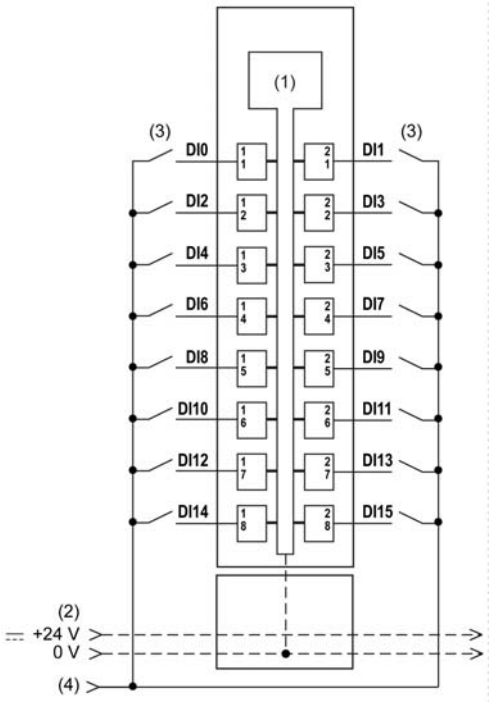

1 Internal electronics
2 24 Vdc I/O power segment integrated into the bus bases
3 2 wire-sensor
4 24 Vdc I/O power segment by external connection

NOTE: I/O electronic modules and the field devices connected to them must all reside on the same 24 Vdc I/O power segment. If not, the status LEDs may not function correctly. In addition, there may potentially be more significant consequences such as an explosion and/or fire hazard.

⚠ WARNING

POTENTIAL EXPLOSION OR FIRE

Connect the returns from the devices to the same power source as the 24 Vdc I/O power segment serving the module.

Failure to follow these instructions can result in death, serious injury, or equipment damage.

⚠ WARNING

UNINTENDED EQUIPMENT OPERATION

Do not connect wires to unused terminals and/or terminals indicated as “No Connection (N.C.)”.

Failure to follow these instructions can result in death, serious injury, or equipment damage.

Chapter 8
TM5SDI2DF Electronic Module 2DI 24 Vdc Sink 3 Wires

What Is in This Chapter?

This chapter contains the following topics:

Topic	Page
TM5SDI2DF Presentation	78
TM5SDI2DF Characteristics	80
TM5SDI2DF Wiring Diagram	83

TM5SDI2DF Presentation

Main Characteristics

The table below describes the main characteristics of the TM5SDI2DF electronic module:

Main Characteristics	
Number of input channels	2
Input frequency	50 kHz max
Input function	Function event counter / gate measurement
Input type	Type 1
Signal type	Sink
Rated input voltage	24 Vdc

Ordering Information

The following illustration shows the slice with a TM5SDI2DF:

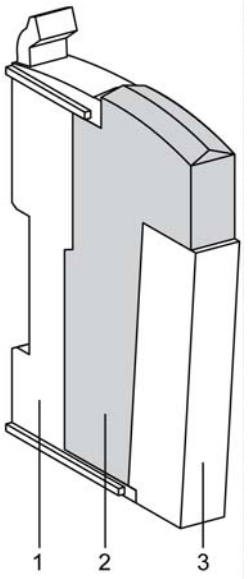

The table below shows the model numbers for the terminal block and bus base associated with the TM5SDI2DF:

Number	Model Number	Description	Color
1	TM5ACBM11 or TM5ACBM15	Bus base Bus base with address setting	White White
2	TM5SDI2DF	Electronic module	White
3	TM5ACTB06 or TM5ACTB12	Terminal block, 6 pins Terminal block, 12 pins	White White

NOTE: For more information, refer to *TM5 bus bases and terminal blocks (see Modicon TM5 / TM7 Flexible System, System Planning and Installation Guide)*

Status LEDs

The following illustrationillustration shows the LEDs for TM5SDI2DF:

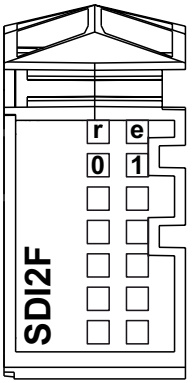

The table below shows the TM5SDI2DF status LEDs:

LEDs	Color	Status	Description
r	Green	Off	No power supply
		Single Flash	Reset state
		Flashing	Preoperational state
		On	Normal operation
e	Red	Off	OK or no power supply
e+r	Steady red / single green flash		Invalid firmware
0-1	Green	On	Input state of the corresponding digital input

TM5SDI2DF Characteristics

Introduction

This is the description characteristics for the TM5SDI2DF electronic module. See also Environmental Characteristics *(see page 25)*.

⚠ WARNING

UNINTENDED EQUIPMENT OPERATION

Do not exceed any of the rated values specified in the environmental and electrical characteristics tables.

Failure to follow these instructions can result in death, serious injury, or equipment damage.

General Characteristics

The table below describes the general characteristics of the TM5SDI2DF electronic module:

General Characteristics	
Rated power supply voltage Power supply source	24 Vdc Connected to the 24 Vdc I/O power segment
Power supply range	20.4...28.8 Vdc
24 Vdc I/O power segment current draw	34 mA
TM5 power bus 5 Vdc current draw	30 mA
Power dissipation	0.97 W max.
Weight	25 g (0.9 oz)
ID code for firmware update	7054 dec.

Input Characteristics

The table below describes the input characteristics of the TM5SDI2DF electronic module:

Input Characteristics		
Number of input channels		2
Wiring type		1, 2 or 3 wires
Signal type		Sink
Input frequency		50 KHz max
Rated input voltage		24 Vdc
Input voltage range		20.4...28.8 Vdc
Rated input current at 24 Vdc		10.5 mA
Input impedance		2.23 kΩ
OFF state		5 Vdc min.
ON state		15 Vdc max.
Noise resistance - cable		Shielded cable is necessary
Input filter	Hardware	≤10 µs
	Software	0...25 ms in 0.2 ms intervals.
Isolation between input and internal bus		See note [1].
Isolation between channels		Not isolated

[1] The isolation of the electronic module is 500 Vac RMS between the electronics powered by the TM5 bus and those powered by 24 Vdc I/O power segment connected to the module. In practice, the TM5 electronic module is installed in the bus base, and there is a bridge between the TM5 power bus and the 24 Vdc I/O power segment. The two power circuits reference the same functional ground (FE) through specific components designed to reduce effects of electromagnetic interference. These components are rated at 30 Vdc or 60 Vdc. This effectively reduces isolation of the entire system from the 500 Vac RMS.

Sensor Supply

The table describes the sensor supply of the TM5SDI2DF electronic module:

Sensor Supply	
Voltage	Power segment supply less voltage drop for internal protection
Voltage drop for internal protection at 500 mA	2 Vdc max.
Sensor supply current (for all powered connected sensors)	500 mA
Internal protection	Overload and short circuit

Event Counter

The table describes the event counter of the TM5SDI2DF electronic module:

Event Counter	
Number of counters	2
Counter 1	Input 1
Counter 2	Input 2
Signal form	Square wave pulse
Input frequency	50 KHz max
Counter frequency	50 KHz max
Counter size	16 bit
Evaluation	Every positive edge, cyclic counter

Gate measurement

The table describes the gate measurement of the TM5SDI2DF electronic module:

Gate measurement	
Number of gate measurements	1
Gate measurement using	Input 1 or Input 2
Signal form	Square wave pulse
Evaluation	Positive edge - Negative edge
Pulse length	≥20 µs
Length of pauses between pulses	≥100 µs
Internal clock frequency	48 MHz, 24 MHz, 12 MHz, 6 MHz, 3 MHz, 1.5 MHz, 750 KHz, 375 KHz, 187.5 KHz
Counter size	16 bit

TM5SDI2DF Wiring Diagram

Wiring Diagram

The following illustration shows the wiring diagram for TM5SDI2DF:

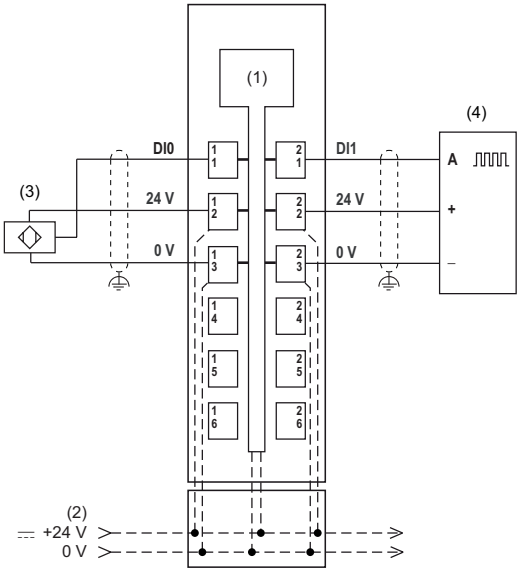

1 Internal electronics
2 24 Vdc I/O power segment integrated into bus base
3 3-wire sensor
4 Counting module

⚠ WARNING

UNINTENDED EQUIPMENT OPERATION

Use the sensor and actuator power supply only for supplying power to sensors or actuators connected to the module.

Failure to follow these instructions can result in death, serious injury, or equipment damage.

Use shielded, properly grounded cables for all analog and high-speed inputs or outputs and communication connections. If you do not use shielded cable for these connections, electromagnetic interference can cause signal degradation. Degraded signals can cause the controller or attached modules and equipment to perform in an unintended manner.

⚠ WARNING

UNINTENDED EQUIPMENT OPERATION

- Use shielded cables for all fast I/O, analog I/O and communication signals.
- Ground cable shields for all analog I/O, fast I/O and communication signals at a single point[1].
- Route communication and I/O cables separately from power cables.

Failure to follow these instructions can result in death, serious injury, or equipment damage.

[1]Multipoint grounding is permissible if connections are made to an equipotential ground plane dimensioned to help avoid cable shield damage in the event of power system short-circuit currents.

⚠ WARNING

UNINTENDED EQUIPMENT OPERATION

Do not connect wires to unused terminals and/or terminals indicated as “No Connection (N.C.)”.

Failure to follow these instructions can result in death, serious injury, or equipment damage.

Chapter 9
TM5SDI2A Electronic Module 2DI 100 ... 240 Vac 3 Wires

What Is in This Chapter?

This chapter contains the following topics:

Topic	Page
TM5SDI2A Presentation	86
TM5SDI2A Characteristics	88
TM5SDI2A Wiring Diagram	90

TM5SDI2A Presentation

Main Characteristics

The table below describes the main characteristics of the TM5SDI2A electronic module:

Main Characteristics	
Number of input channels	2
Input type	Type 1
Rated input voltage	100 ... 240 Vac

Ordering Information

The following illustration shows the TM5SDI2A:

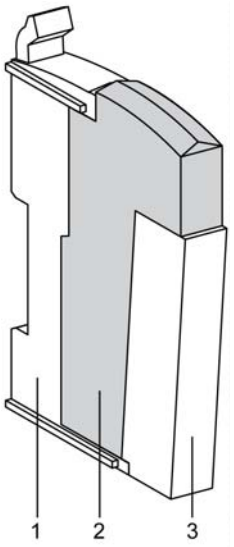

The table below shows the model numbers for the terminal block and the bus base associated with the TM5SDI2A:

Number	Model Number	Description	Color
1	TM5ACBM12	Bus base	Black
2	TM5SDI2A	Electronic Module	Black
3	TM5ACTB32	Terminal block, 12 pins	Black

NOTE: For more information, refer to *TM5 bus bases and terminal blocks (see Modicon TM5 / TM7 Flexible System, System Planning and Installation Guide)*.

Status LEDs

The following illustration shows the LEDs for TM5SDI2A:

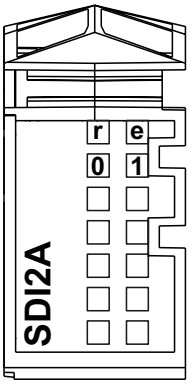

The table below shows the TM5SDI2A status LEDs:

LEDs	Color	Status	Description
r	Green	Off	No power supply
		Single Flash	Reset state
		Flashing	Preoperational state
		On	Normal operation
e	Red	Off	OK or no power supply
		Double Flash	I/O supply too low
e+r	Steady red / single green flash		Invalid firmware
0 - 1	Green	Off	Corresponding input deactivated
		On	Corresponding input activated

TM5SDI2A Characteristics

Introduction

This is the description characteristics for the TM5SDI2A electronic module. See also Environmental Characteristics *(see page 25)*.

⚠ DANGER

FIRE HAZARD

Use only the recommended wire sizes for the current capacity of the I/O channels and power supplies.

Failure to follow these instructions will result in death or serious injury.

⚠ WARNING

UNINTENDED EQUIPMENT OPERATION

Do not exceed any of the rated values specified in the environmental and electrical characteristics tables.

Failure to follow these instructions can result in death, serious injury, or equipment damage.

General Characteristics

The table below describes the general characteristics of the TM5SDI2A electronic module:

General Characteristics	
Rated power supply voltage Power supply source	100...240 Vac Connected to an external AC power
Power supply range	100...240 Vac
24 Vdc I/O segment current draw	0 mA (N.C.)
TM5 Bus 5 Vdc current draw	28 mA
Power dissipation	0.69 W max.
Weight	25 g (0.9 oz)
ID code for firmware update	9540 dec

Input Characteristics

The table describes the input characteristics of the TM5SDI2A electronic module:

Input Characteristics		
Number of input channels		2
Wiring type		1, 2 or 3 wires
Rated input voltage		240 Vac
Input voltage range		100...240 Vac
Rated input current at 100 Vac Rated input current at 240 Vac		5 mA 11 mA
Input filter	Hardware	0 ->1: ≤40 ms 1 ->0: ≤30 ms
	Software	Default 1 ms, can be configured between 0 and 25 ms in 0.2 ms intervals.
Isolation	Between channels and bus	1 minute 2500 Vac
	Between channels	Not isolated

Sensor Supply

The table describes the sensor supply of the TM5SDI2A electronic module:

Supply	
Voltage	Electronic module supply minus voltage drop for short circuit protection
Voltage drop for internal protection at 500 mA	2 Vdc max.
Sensor supply current (for all powered connected sensors)	500 Vac max., can be configured by software between 0 and 500 mA
Short circuit protection	Yes

TM5SDI2A Wiring Diagram

Wiring Diagram

The following illustration shows the wiring diagram for the TM5SDI2A:

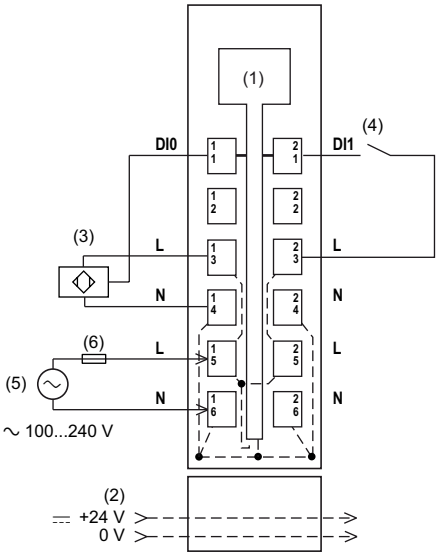

1 Internal electronics
2 24 Vdc I/O power segment integrated into the bus bases
3 3-wire sensor
4 2-wire sensor
5 External power supply: 100...240 Vac
6 External fuse type T slow-blow 1 A 250 V

⚠ WARNING

UNINTENDED EQUIPMENT OPERATION

Do not connect wires to unused terminals and/or terminals indicated as “No Connection (N.C.)”.

Failure to follow these instructions can result in death, serious injury, or equipment damage.

⚠ WARNING

UNINTENDED EQUIPMENT OPERATION

Use the sensor and actuator power supply only for supplying power to sensors or actuators connected to the module.

Failure to follow these instructions can result in death, serious injury, or equipment damage.

Chapter 10
TM5SDI4A Electronic Module 4DI 100 ... 240 Vac 2 Wires

What Is in This Chapter?

This chapter contains the following topics:

Topic	Page
TM5SDI4A Presentation	94
TM5SDI4A Characteristics	96
TM5SDI4A Wiring Diagram	98

TM5SDI4A Presentation

Main Characteristics

The table below describes the main characteristics of the TM5SDI4A electronic module:

Main Characteristics	
Number of input channels	4
Input type	Type 1
Rated input voltage	100 ... 240 Vac

Ordering Information

The following illustration shows the TM5SDI4A:

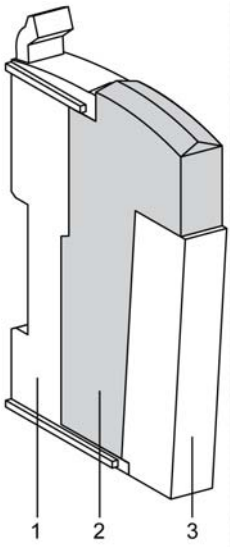

The table below shows the model numbers for the terminal block and the bus base associated with the TM5SDI4A:

Number	Model Number	Description	Color
1	TM5ACBM12	Bus base	Black
2	TM5SDI4A	Electronic Module	Black
3	TM5ACTB32	Terminal block, 12 pins	Black

NOTE: For more information, refer to *TM5 bus bases and terminal blocks (see Modicon TM5 / TM7 Flexible System, System Planning and Installation Guide)*.

Status LEDs

The following illustration shows the LEDs for TM5SDI4A:

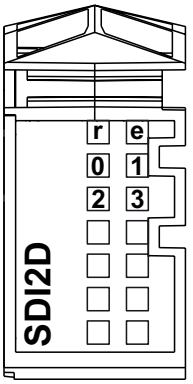

The table below shows the TM5SDI4A status LEDs:

LEDs	Color	Status	Description
r	Green	Off	No power supply
		Single Flash	Reset state
		Flashing	Preoperational state
		On	Normal operation
e	Red	Off	OK or no power supply
		Double Flash	I/O supply too low
e+r	Steady red / single green flash		Invalid firmware
0 - 3	Green	Off	Corresponding input deactivated
		On	Corresponding input activated

TM5SDI4A Characteristics

Introduction

This is the description characteristics for the TM5SDI4A electronic module. See also Environmental Characteristics *(see page 25)*.

⚠ DANGER

FIRE HAZARD

Use only the recommended wire sizes for the current capacity of the I/O channels and power supplies.

Failure to follow these instructions will result in death or serious injury.

⚠ WARNING

UNINTENDED EQUIPMENT OPERATION

Do not exceed any of the rated values specified in the environmental and electrical characteristics tables.

Failure to follow these instructions can result in death, serious injury, or equipment damage.

General Characteristics

The table below describes the general characteristics of the TM5SDI4A electronic module:

General Characteristics	
Rated power supply voltage Power supply source	100...240 Vac Connected to an external AC power
Power supply range	100...240 Vac
24 Vdc I/O segment current draw	0 mA (N.C.)
TM5 Bus 5 Vdc current draw	34 mA
Power dissipation	1.08 W max.
Weight	25 g (0.9 oz)
ID code	9541 dec

Input Characteristics

The table describes the input characteristics of the TM5SDI4A electronic module:

Input Characteristics		
Number of input channels		4
Wiring type		1 or 2 wires
Rated input voltage		240 Vac
Input voltage range		120...240 Vac
Rated input current at 120 Vac Rated input current at 240 Vac		5 mA 11 mA
Input filter	Hardware	0 -> 1: ≤40 ms 1 -> 0: ≤30 ms
	Software	Default 1 ms, can be configured between 0 and 25 ms in 0.2 ms intervals.
Isolation	Between channels and bus	1 minute 2500 Vac
	Between channels	Not isolated

TM5SDI4A Wiring Diagram

Wiring Diagram

The following illustration shows the wiring diagram for TM5SDI4A:

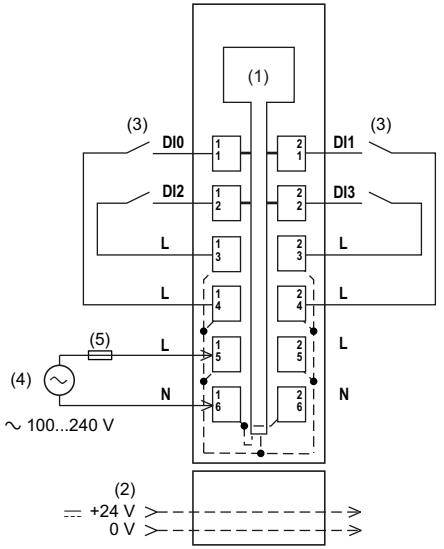

1 Internal electronics
2 24 Vdc I/O power segment integrated into the bus bases
3 2-wire sensor
4 External power supply: 100...240 Vac
5 External fuse type T slow-blow 1 A - 250 V

⚠ WARNING

UNINTENDED EQUIPMENT OPERATION

Do not connect wires to unused terminals and/or terminals indicated as “No Connection (N.C.)”.

Failure to follow these instructions can result in death, serious injury, or equipment damage.

⚠ WARNING

UNINTENDED EQUIPMENT OPERATION

Use the sensor and actuator power supply only for supplying power to sensors or actuators connected to the module.

Failure to follow these instructions can result in death, serious injury, or equipment damage.

Chapter 11
TM5SDI6U Electronic Module 6DI 100 ... 120 Vac 1 Wire

What Is in This Chapter?

This chapter contains the following topics:

Topic	Page
TM5SDI6U Presentation	102
TM5SDI6U Characteristics	104
TM5SDI6U Wiring Diagram	106

TM5SDI6U Presentation

Main Characteristics

The table below describes the main characteristics of the TM5SDI6U electronic module:

Main Characteristics	
Number of input channels	6
Input type	Type 1
Rated input voltage	100...120 Vac

Ordering Information

The following illustration shows the TM5SDI6U:

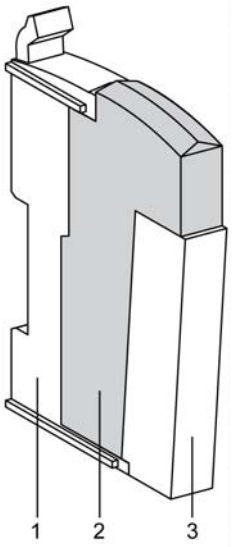

The table below shows the model numbers for the terminal block and the bus base associated with the TM5SDI6U:

Number	Model Number	Description	Color
1	TM5ACBM12	Bus base	Black
2	TM5SDI6U	Electronic Module	Black
3	TM5ACTB32	Terminal block, 12 pins	Black

NOTE: For more information, refer to *TM5 bus bases and terminal blocks (see Modicon TM5 / TM7 Flexible System, System Planning and Installation Guide)*.

Status LEDs

The following illustration shows the LEDs for TM5SDI6U:

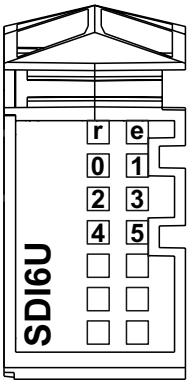

The table below shows the TM5SDI6U status LEDs:

LEDs	Color	Status	Description
r	Green	Off	No power supply
		Single Flash	Reset state
		Flashing	Preoperational state
		On	Normal operation
e	Red	Off	OK or no power supply
		Double Flash	I/O supply too low
e+r	Steady red / single green flash		Invalid firmware
0 - 5	Green	Off	Corresponding input deactivated
		On	Corresponding input activated

TM5SDI6U Characteristics

Introduction

This is the description characteristics for the TM5SDI6U electronic module. See also Environmental Characteristics *(see page 25)*.

⚠ DANGER

FIRE HAZARD

Use only the recommended wire sizes for the current capacity of the I/O channels and power supplies.

Failure to follow these instructions will result in death or serious injury.

⚠ WARNING

UNINTENDED EQUIPMENT OPERATION

Do not exceed any of the rated values specified in the environmental and electrical characteristics tables.

Failure to follow these instructions can result in death, serious injury, or equipment damage.

General Characteristics

The table below describes the general characteristics of the TM5SDI6U electronic module:

General Characteristics	
Rated power supply voltage Power supply source	120 Vac Connected to the external power AC
Power supply range	100...120 Vac
24 Vdc I/O segment current draw	0 mA (N.C.)
TM5 Bus 5 Vdc current draw	42 mA
Power dissipation	0.89 W max.
Weight	25 g (0.9 oz)
ID code	9583 dec

Input Characteristics

The table describes the input characteristics of the TM5SDI6U electronic module:

Input Characteristics		
Number of input channels		6
Wiring type		1 wire
Rated input voltage		120 Vac
Input voltage range		100...120 Vac
Rated input current at 120 Vac		10 mA at 60 Hz 8.5 mA at 50 Hz
Input filter	Hardware	0 ->1 ≤15 ms 1 ->0 ≤30 ms
	Software	Default 1 ms, can be configured between 0 and 25 ms in 0.2 ms intervals.
Isolation	Between channels and bus	1 minute 1500 Vac
	Between channels	Not isolated

TM5SDI6U Wiring Diagram

Wiring Diagram

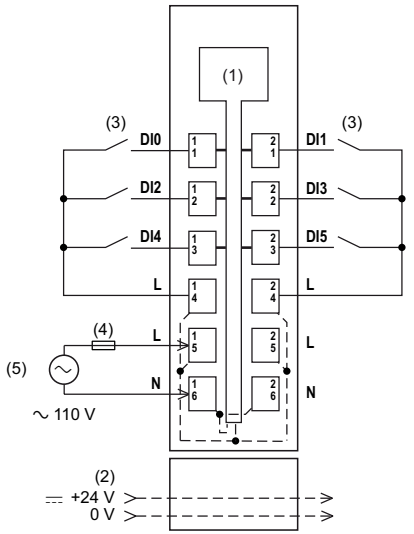

1 Internal electronics
2 24 Vdc I/O power segment integrated into the bus bases
3 1-wire sensor
4 External fuse type T slow-blow 1 A - 250 V
5 External power supply 110 Vac

⚠ WARNING

UNINTENDED EQUIPMENT OPERATION

Do not connect wires to unused terminals and/or terminals indicated as “No Connection (N.C.)”.

Failure to follow these instructions can result in death, serious injury, or equipment damage.

Part III
TM5 System Digital Output Electronic Modules

What Is in This Part?

This part contains the following chapters:

Chapter	Chapter Name	Page
12	TM5SDO2T Electronic Module 2DO 24 Vdc Tr 0.5 A 3 Wires	109
13	TM5SDO4T Electronic Module 4DO 24 Vdc Tr 0.5 A 3 Wires	119
14	TM5SDO4TA Electronic Module 4DO 24 Vdc Tr 2 A 3 Wires	129
15	TM5SDO6T Electronic Module 6DO 24 Vdc Tr 0.5 A 2 Wires	139
16	TM5SDO8TA Electronic Module 8DO 24 Vdc Tr 2 A 1 Wire	147
17	TM5SDO12T Electronic Module 12DO 24 Vdc Tr 0.5 A 1 Wire	157
18	TM5SDO16T Electronic Module 16DO 24 Vdc Tr 0.5 A 1 Wire	167
19	TM5SDO2R Electronic Module 2DO 30 Vdc/230 Vac 5A Relay C/O	177
20	TM5SDO4R Electronic Module 4DO 30 Vdc / 230 Vac 5 A Relay N/O	185
21	TM5SDO2S Electronic Module 2DO 240 Vac Triac 1 A 3 Wires	193

Chapter 12
TM5SDO2T Electronic Module 2DO 24 Vdc Tr 0.5 A 3 Wires

What Is in This Chapter?

This chapter contains the following topics:

Topic	Page
TM5SDO2T Presentation	110
TM5SDO2T Characteristics	113
TM5SDO2T Wiring Diagram	116

TM5SDO2T Presentation

Main Characteristics

The table below describes the main characteristics of the TM5SDO2T electronic module:

Main Characteristics	
Number of outputs channels	2
Output type	Transistor
Signal type	Source
Rated input voltage	24 Vdc
Output current	0.5 A max.

Ordering Information

The following illustration shows the TM5SDO2T:

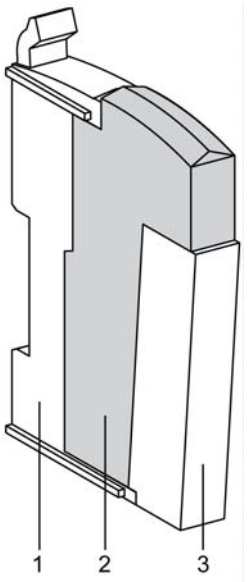

The table below shows the model numbers for the terminal blocks and the bus bases associated with the TM5SDO2T:

Number	Model Number	Description	Color
1	TM5ACBM11 or TM5ACBM15	Bus base Bus base with address setting	White White
2	TM5SDO2T	Electronic Module	White
3	TM5ACTB06 or TM5ACTB12	Terminal block, 6 pins Terminal block, 12 pins	White White

NOTE: For more information, refer to *TM5 bus bases and terminal blocks (see Modicon TM5 / TM7 Flexible System, System Planning and Installation Guide)*.

Status LEDs

The following illustration shows LEDs for TM5SDO2T:

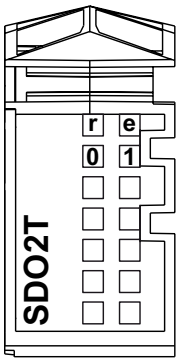

The table below shows the TM5SDO2T status LEDs:

LEDs	Color	Status	Description
r	Green	Off	No power supply
		Single Flash	Reset state
		Flashing	Preoperational state
		On	Normal operation

NOTE:

(1) The e LED flashes when detecting one of the following errors on output channels:

- Short-circuit
- Overload
- No 24 Vdc Power Segment supply and an output is at logic 1

LEDs	Color	Status	Description
e	Red	Off	OK or no power supply
		Single flash	Error detected on output channels(1)
e+r	Steady Red / Single Green flash		Invalid firmware
0 - 1	Yellow	Off	Corresponding output deactivated
		On	Corresponding output activated

NOTE:

(1) The e LED flashes when detecting one of the following errors on output channels:

- Short-circuit
- Overload
- No 24 Vdc Power Segment supply and an output is at logic 1

TM5SDO2T Characteristics

Introduction

This is the description characteristics for TM5SDO2T electronic module.

See also Environmental Characteristics *(see page 25)*.

⚠ DANGER

FIRE HAZARD

Use only the recommended wire sizes for the current capacity of the I/O channels and power supplies.

Failure to follow these instructions will result in death or serious injury.

⚠ WARNING

UNINTENDED EQUIPMENT OPERATION

Do not exceed any of the rated values specified in the environmental and electrical characteristics tables.

Failure to follow these instructions can result in death, serious injury, or equipment damage.

General Characteristics

The table below describes the general characteristics of the TM5SDO2T electronic module:

General Characteristics	
Rated power supply voltage Power supply source	24 Vdc Connected to the 24 Vdc I/O power segment
Power supply range	20.4...28.8 Vdc
24 Vdc I/O segment current draw	14 mA
TM5 bus 5 Vdc current draw	26 mA
Power dissipation	0.57 W max.
Weight	25 g (0.9 oz)
ID code for firmware update	7062 dec

Output Characteristics

The table below describes the output characteristics of the TM5SDO2T electronic module:

Output Characteristics		
Output channels		2
Wiring type		1, 2 or 3 wires
Output current		0.5 A max. per output
Total output current		1 A max.
Output voltage		24 Vdc
Output voltage range		20.4...28.8 Vdc
Voltage drop		0.3 Vdc max. at 0.5 A rated current
Leakage current when switched off		5 µA
Turn on time		300 µs max.
Turn off time		300 µs max.
Output protection		Against short-circuit and overload, thermal protection
Short-circuit output peak current		12 A max.
Automatic rearming after short-circuit or overload		Yes, 10 ms min. depending on internal temperature
Protection against reverse polarity		Yes
Clamping voltage		Typ. 50 Vdc
Switching frequency	Resistive load	500 Hz max.
	Inductive load	See the switching inductive load characteristics *(see page 115)*.
Isolation	Between input and internal bus	See note [1]
	Between channels	Not isolated

[1] The isolation of the electronic module is 500 Vac RMS between the electronics powered by the TM5 bus and those powered by 24 Vdc I/O power segment connected to the module. In practice, the TM5 electronic module is installed in the bus base, and there is a bridge between the TM5 power bus and the 24 Vdc I/O power segment. The two power circuits reference the same functional ground (FE) through specific components designed to reduce effects of electromagnetic interference. These components are rated at 30 Vdc or 60 Vdc. This effectively reduces isolation of the entire system from the 500 Vac RMS.

Actuator Supply

The table below describes the actuator supply of the TM5SDO2T electronic module:

Supply	
Voltage	Power segment supply less voltage drop for internal protection.
Voltage drop for internal protection at 500 mA	2 Vdc max
Actuator supply current (for all powered connected actuators)	500 mA
Internal protection	Overload and short-circuit

Switching Inductive Loads

The curves below provide the switching inductive load characteristics for the TM5SDO2T electronic module.

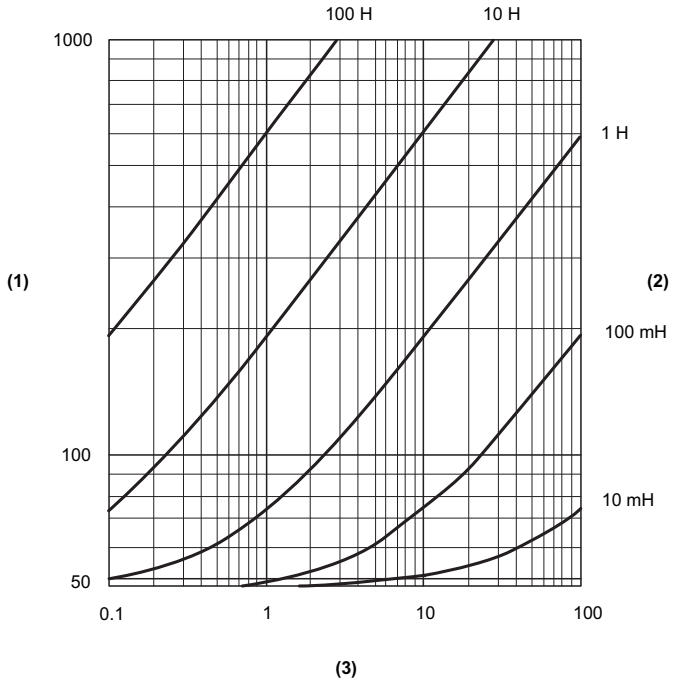

1 Load resistance in Ω
2 Load inductance
3 Max. operating cycles / second

TM5SDO2T Wiring Diagram

Wiring Diagram

The following illustration shows the wiring diagram for TM5SDO2T:

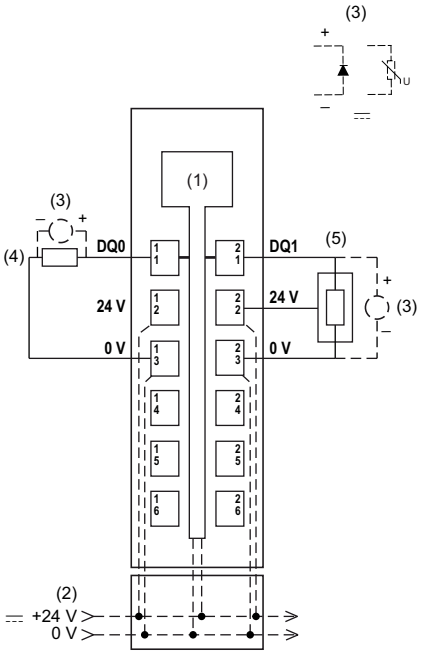

1 Internal electronics
2 24 Vdc I/O power segment integrated into the bus bases
3 Inductive load protection
4 2-wire load
5 3-wire load

⚠ WARNING

UNINTENDED EQUIPMENT OPERATION

Do not connect wires to unused terminals and/or terminals indicated as “No Connection (N.C.)”.

Failure to follow these instructions can result in death, serious injury, or equipment damage.

⚠ WARNING

UNINTENDED EQUIPMENT OPERATION

Use the sensor and actuator power supply only for supplying power to sensors or actuators connected to the module.

Failure to follow these instructions can result in death, serious injury, or equipment damage.

Chapter 13
TM5SDO4T Electronic Module 4DO 24 Vdc Tr 0.5 A 3 Wires

What Is in This Chapter?

This chapter contains the following topics:

Topic	Page
TM5SDO4T Presentation	120
TM5SDO4T Characteristics	123
TM5SDO4T Wiring Diagram	126

TM5SDO4T Presentation

Main Characteristics

The table below describes the main characteristics of the TM5SDO4T electronic module:

Main Characteristics	
Number of output channels	4
Output type	Transistor
Signal type	Source
Rated input voltage	24 Vdc
Output current	0.5 A max.

Ordering Information

The following illustration shows the TM5SDO4T:

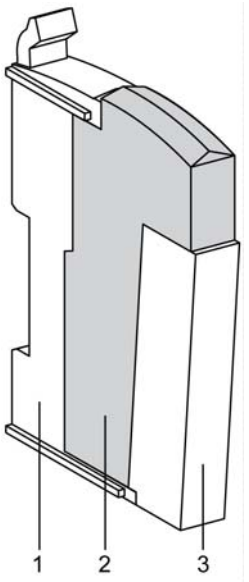

The table below shows the model numbers for the terminal blocks and the bus bases associated with the TM5SDO4T:

Number	Model Number	Description	Color
1	TM5ACBM11 or TM5ACBM15	Bus base Bus base with address setting	White White
2	TM5SDO4T	Electronic Module	White
3	TM5ACTB06 or TM5ACTB12	Terminal block, 6 pins Terminal block, 12 pins	White White

NOTE: For more information, refer to *TM5 bus bases and terminal blocks (see Modicon TM5 / TM7 Flexible System, System Planning and Installation Guide)*.

Status LEDs

The following illustration shows LEDs for TM5SDO4T:

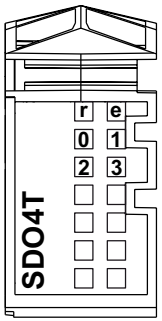

The table below shows the TM5SDO4T status LEDs:

LEDs	Color	Status	Description
r	Green	Off	No power supply
		Single Flash	Reset state
		Flashing	Preoperational state
		On	Normal operation

NOTE:

(1) The e LED flashes when detecting one of the following errors on output channels:

- Short-circuit
- Overload
- No 24 Vdc Power Segment supply and an output is at logic 1

LEDs	Color	Status	Description
e	Red	Off	OK or no power supply
		Single flash	Error detected on output channels(1)
e+r	Steady Red / Single Green flash		Invalid firmware
0 - 3	Yellow	Off	Corresponding output deactivated
		On	Corresponding output activated

NOTE:

(1) The e LED flashes when detecting one of the following errors on output channels:

- Short-circuit
- Overload
- No 24 Vdc Power Segment supply and an output is at logic 1

TM5SDO4T Characteristics

Introduction

This is the description characteristics for TM5SDO4T electronic module.

See also Environmental Characteristics *(see page 25)*.

⚠ DANGER

FIRE HAZARD

Use only the recommended wire sizes for the current capacity of the I/O channels and power supplies.

Failure to follow these instructions will result in death or serious injury.

⚠ WARNING

UNINTENDED EQUIPMENT OPERATION

Do not exceed any of the rated values specified in the environmental and electrical characteristics tables.

Failure to follow these instructions can result in death, serious injury, or equipment damage.

General Characteristics

The table below describes the general characteristics of the TM5SDO4T electronic module:

General Characteristics	
Rated power supply voltage Power supply source	24 Vdc Connected to the 24 Vdc I/O power segment
Power supply range	20.4...28.8 Vdc
24 Vdc I/O segment current draw	20 mA
TM5 bus 5 Vdc current draw	32 mA
Power dissipation	0.86 W max.
Weight	25 g (0.9 oz)
ID code for firmware update	7063 dec

Output Characteristics

The table below describes the output characteristics of the TM5SDO4T electronic module:

Output Characteristics		
Output channels		4
Wiring type		1, 2 or 3 wires
Output current		0.5 A max. per output
Total output current		2 A max.
Output voltage		24 Vdc
Output voltage range		20.4...28.8 Vdc
Voltage drop		0.3 Vdc max. at 0.5 A rated current
Leakage current when switched off		5 µA
Turn on time		300 µs max.
Turn off time		300 µs max.
Output protection		Against short-circuit and overload, thermal protection
Short circuit output peak current		12 A max.
Automatic rearming after short circuit or overload		Yes, 10 ms min. depending on internal temperature
Protection against reverse polarity		Yes
Clamping voltage		Typ. 50 Vdc
Switching frequency	Resistive load	500 Hz max.
	Inductive load	See the switching inductive load characteristics *(see page 125)*.
Isolation	Between input and internal bus	See note [1]
	Between channels	Not isolated

[1] The isolation of the electronic module is 500 Vac RMS between the electronics powered by the TM5 bus and those powered by 24 Vdc I/O power segment connected to the module. In practice, the TM5 electronic module is installed in the bus base, and there is a bridge between the TM5 power bus and the 24 Vdc I/O power segment. The two power circuits reference the same functional ground (FE) through specific components designed to reduce effects of electromagnetic interference. These components are rated at 30 Vdc or 60 Vdc. This effectively reduces isolation of the entire system from the 500 Vac RMS.

Actuator Supply

The table below describes the actuator supply of the TM5SDO4T electronic module:

Supply	
Voltage	Power segment supply less voltage drop for internal protection.
Voltage drop for internal protection at 500 mA	2 Vdc max
Actuator supply current (for all powered connected actuators)	500 mA
Internal protection	Overload and short circuit

Switching Inductive Loads

The curves below provide the switching inductive load characteristics for the TM5SDO4T electronic module.

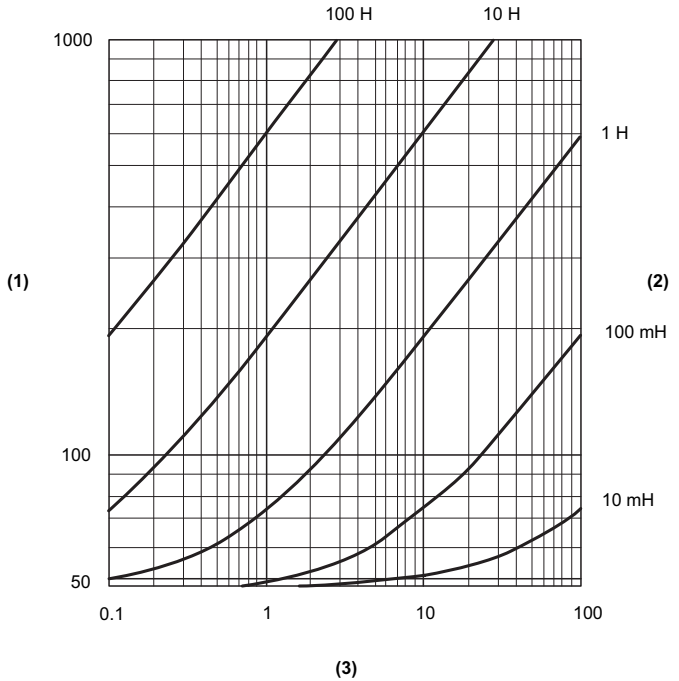

1 Load resistance in Ω
2 Load inductance
3 Max. operating cycles / second

TM5SDO4T Wiring Diagram

Wiring Diagram

The following illustration shows the wiring diagram for TM5SDO4T:

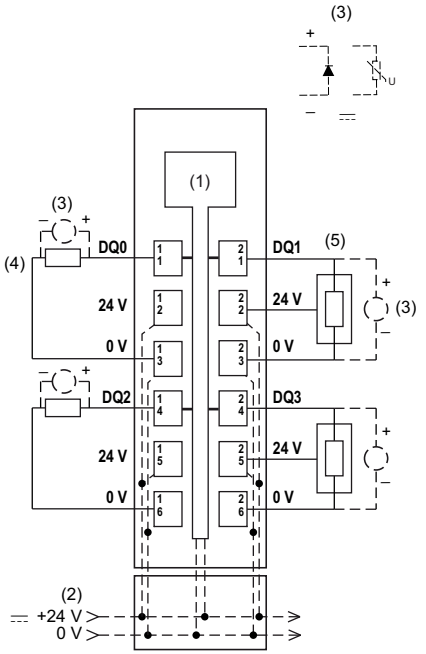

1 Internal electronics
2 24 Vdc I/O power segment integrated into the bus bases
3 Inductive load protection
4 2-wire load
5 3-wire load

⚠ WARNING

UNINTENDED EQUIPMENT OPERATION

Do not connect wires to unused terminals and/or terminals indicated as “No Connection (N.C.)”.

Failure to follow these instructions can result in death, serious injury, or equipment damage.

⚠ WARNING

UNINTENDED EQUIPMENT OPERATION

Use the sensor and actuator power supply only for supplying power to sensors or actuators connected to the module.

Failure to follow these instructions can result in death, serious injury, or equipment damage.

Chapter 14
TM5SDO4TA Electronic Module 4DO 24 Vdc Tr 2 A 3 Wires

What Is in This Chapter?

This chapter contains the following topics:

Topic	Page
TM5SDO4TA Presentation	130
TM5SDO4TA Characteristics	133
TM5SDO4TA Wiring Diagram	136

TM5SDO4TA Presentation

Main Characteristics

The table below describes the main characteristics of the TM5SDO4TA electronic module:

Main Characteristics	
Number of output channels	4
Output type	Transistor
Signal type	Source
Rated input voltage	24 Vdc
Output current	2 A max.

Ordering Information

The following illustration shows the TM5SDO4TA:

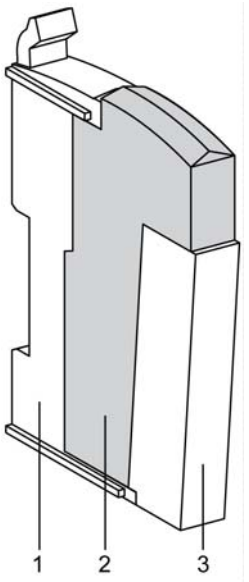

The table below shows the model numbers for the terminal blocks and the bus bases associated with the TM5SDO4TA:

Number	Model Number	Description	Color
1	TM5ACBM11 or TM5ACBM15	Bus base Bus base with address setting	White White
2	TM5SDO4TA	Electronic Module	White
3	TM5ACTB06 or TM5ACTB12	Terminal block, 6 pins Terminal block, 12 pins	White White

NOTE: For more information, refer to *TM5 bus bases and terminal blocks (see Modicon TM5 / TM7 Flexible System, System Planning and Installation Guide)*.

Status LEDs

The following illustration shows LEDs for TM5SDO4TA:

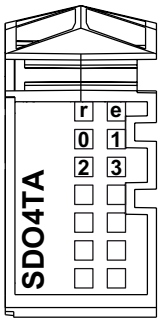

The table below shows the TM5SDO4TA status LEDs:

LEDs	Color	Status	Description
r	Green	Off	No power supply
		Single Flash	Reset state
		Flashing	Preoperational state
		On	Normal operation

NOTE:

(1) The e LED flashes when detecting one of the following errors on output channels:

- Short-circuit
- Overload
- No 24 Vdc Power Segment supply and an output is at logic 1

LEDs	Color	Status	Description
e	Red	Off	OK or no power supply
		Single flash	Error detected on output channels(1)
e+r	Steady Red / Single Green flash		Invalid firmware
0 - 3	Yellow	Off	Corresponding output deactivated
		On	Corresponding output activated

NOTE:

(1) The e LED flashes when detecting one of the following errors on output channels:

- Short-circuit
- Overload
- No 24 Vdc Power Segment supply and an output is at logic 1

TM5SDO4TA Characteristics

Introduction

This is the description characteristics for the TM5SDO4TA electronic module.

See also Environmental Characteristics *(see page 25)*.

⚠ DANGER

FIRE HAZARD

Use only the recommended wire sizes for the current capacity of the I/O channels and power supplies.

Failure to follow these instructions will result in death or serious injury.

⚠ WARNING

UNINTENDED EQUIPMENT OPERATION

Do not exceed any of the rated values specified in the environmental and electrical characteristics tables.

Failure to follow these instructions can result in death, serious injury, or equipment damage.

General Characteristics

The table below describes the general characteristics of the TM5SDO4TA electronic module:

General Characteristics	
Rated power supply voltage Power supply source	24 Vdc Connected to the 24 Vdc I/O power segment
Power supply range	20.4...28.8 Vdc
24 Vdc I/O segment current draw	21 mA
TM5 bus 5 Vdc current draw	32 mA
Power dissipation	2.10 W max.
Weight	25 g (0.9 oz)
ID code for firmware update	7068 dec

Output Characteristics

The table below describes the output characteristics of the TM5SDO4TA electronic module:

Output Characteristics		
Output channels		4
Wiring type		1, 2 or 3 wires
Output current		2 A max. per output
Total output current		4 A max.
Output voltage		24 Vdc
Output voltage range		20.4...28.8 Vdc
Voltage drop		0.5 Vdc max. at 2 A rated current
Leakage current when switched off		5 µA
Turn on time		300 µs max.
Turn off time		300 µs max.
Output protection		Against short-circuit and overload, thermal protection
Short circuit output peak current		12 A max.
Automatic rearming after short circuit or overload		Yes, 10 ms min. depending on internal temperature
Protection against reverse polarity		Yes
Clamping voltage		Typ. 50 Vdc
Switching frequency	Resistive load	500 Hz max.
	Inductive load	See the switching inductive load characteristics *(see page 135)*.
Isolation	Between input and internal bus	See note [1]
	Between channels	Not isolated

[1] The isolation of the electronic module is 500 Vac RMS between the electronics powered by the TM5 bus and those powered by 24 Vdc I/O power segment connected to the module. In practice, the TM5 electronic module is installed in the bus base, and there is a bridge between the TM5 power bus and the 24 Vdc I/O power segment. The two power circuits reference the same functional ground (FE) through specific components designed to reduce effects of electromagnetic interference. These components are rated at 30 Vdc or 60 Vdc. This effectively reduces isolation of the entire system from the 500 Vac RMS.

Actuator Supply

The table below describes the actuator supply of the TM5SDO4TA electronic module:

Supply	
Voltage	Power segment supply less voltage drop for internal protection.
Voltage drop for internal protection at 500 mA	2 Vdc max
Actuator supply current (for all powered connected actuators)	500 mA
Internal protection	Overload and short circuit

Switching Inductive Loads

The curves below provide the switching inductive load characteristics for the TM5SDO4TA electronic module.

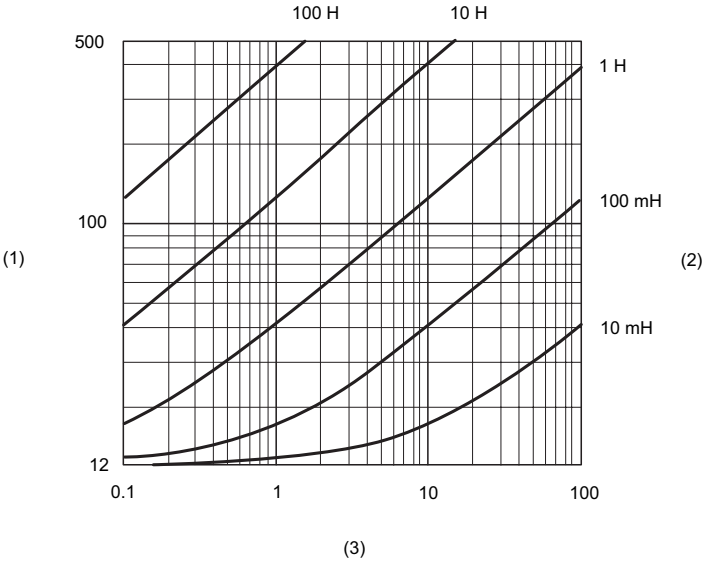

1 Load resistance in Ω
2 Load inductance
3 Max. operating cycles / second

TM5SDO4TA Wiring Diagram

Wiring Diagram

The following illustration shows the wiring diagram for TM5SDO4TA:

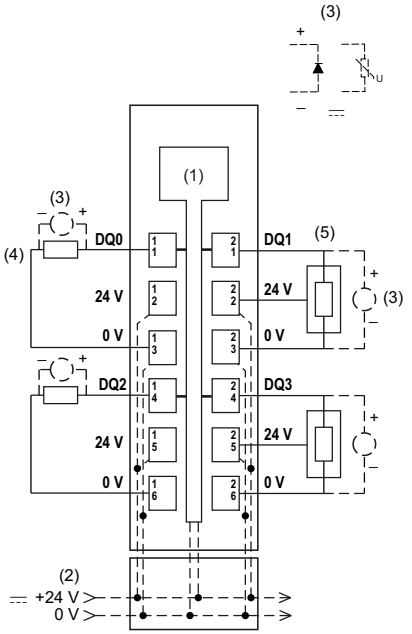

1 Internal electronics
2 24 Vdc I/O power segment integrated into the bus bases
3 Inductive load protection
4 2-wire load
5 3-wire load

⚠ WARNING

UNINTENDED EQUIPMENT OPERATION

Do not connect wires to unused terminals and/or terminals indicated as “No Connection (N.C.)”.

Failure to follow these instructions can result in death, serious injury, or equipment damage.

⚠ WARNING

UNINTENDED EQUIPMENT OPERATION

Use the sensor and actuator power supply only for supplying power to sensors or actuators connected to the module.

Failure to follow these instructions can result in death, serious injury, or equipment damage.

Chapter 15
TM5SDO6T Electronic Module 6DO 24 Vdc Tr 0.5 A 2 Wires

What Is in This Chapter?

This chapter contains the following topics:

Topic	Page
TM5SDO6T Presentation	140
TM5SDO6T Characteristics	143
TM5SDO6T Wiring Diagram	146

TM5SDO6T Presentation

Main Characteristics

The table below describes the main characteristics of the TM5SDO6T electronic module:

Main Characteristics	
Number of output channels	6
Output type	Transistor
Signal type	Source
Rated input voltage	24 Vdc
Output current	0.5 A max.

Ordering Information

The following illustration shows the TM5SDO6T:

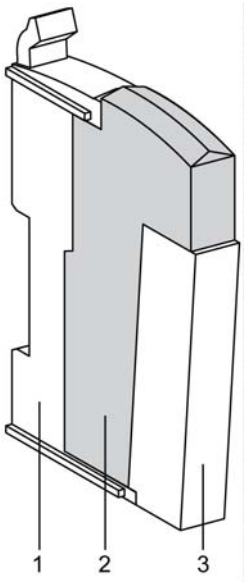

The table below shows the model numbers for the terminal blocks and the bus bases associated with the TM5SD06T:

Number	Model Number	Description	Color
1	TM5ACBM11 or TM5ACBM15	Bus base Bus base with address setting	White White
2	TM5SDO6T	Electronic module	White
3	TM5ACTB06 or TM5ACTB12	Terminal block, 6 pins Terminal block, 12 pins	White White

NOTE: For more information, refer to *TM5 bus bases and terminal blocks (see Modicon TM5 / TM7 Flexible System, System Planning and Installation Guide)*.

Status LEDs

The following illustration shows LEDs for TM5SDO6T:

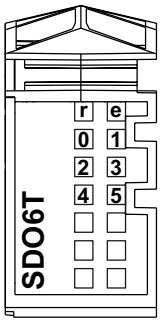

The table below shows the TM5SDO6T status LEDs:

LEDs	Color	Status	Description
r	Green	Off	No power supply
		Single Flash	Reset state
		Flashing	Preoperational state
		On	Normal operation

NOTE:

(1) The e LED flashes when detecting one of the following errors on output channels:

- Short-circuit
- Overload
- No 24 Vdc Power Segment supply and an output is at logic 1

LEDs	Color	Status	Description
e	Red	Off	OK or no power supply
		Single flash	Error detected on output channels(1)
e+r	Steady Red / Single Green flash		Invalid firmware
0 - 5	Yellow	Off	Corresponding output deactivated
		On	Corresponding output activated

NOTE:

(1) The e LED flashes when detecting one of the following errors on output channels:

- Short-circuit
- Overload
- No 24 Vdc Power Segment supply and an output is at logic 1

TM5SDO6T Characteristics

Introduction

This is the description characteristics for the TM5SDO6T electronic module.

See also Environmental Characteristics *(see page 25)*.

⚠ DANGER

FIRE HAZARD

Use only the recommended wire sizes for the current capacity of the I/O channels and power supplies.

Failure to follow these instructions will result in death or serious injury.

⚠ WARNING

UNINTENDED EQUIPMENT OPERATION

Do not exceed any of the rated values specified in the environmental and electrical characteristics tables.

Failure to follow these instructions can result in death, serious injury, or equipment damage.

General Characteristics

The table below describes the general characteristics of the TM5SDO6T electronic module:

General Characteristics	
Rated power supply voltage Power supply source	24 Vdc Connected to the 24 Vdc I/O power segment
Power supply range	20.4...28.8 Vdc
24 Vdc I/O segment current draw	30 mA
TM5 bus 5 Vdc current draw	36 mA
Power dissipation	1.20 W max.
Weight	25 g (0.9 oz)
ID code for firmware update	7064 dec

Output Characteristics

The table below describes the output characteristics of the TM5SDO6T electronic module:

Output Characteristics		
Output channels		6
Wiring type		1 or 2 wires
Output current		0.5 A max. per output
Total output current		3 A max.
Output voltage		24 Vdc
Output voltage range		20.4...28.8 Vdc
Voltage drop		0.3 Vdc max. at 0.5 A rated current
Leakage current when switched off		5 µA
Turn on time		300 µs max.
Turn off time		300 µs max.
Output protection		Against short-circuit and overload, thermal protection
Short-circuit output peak current		12 A max.
Automatic rearming after short-circuit or overload		Yes, 10 ms min. depending on internal temperature
Protection against reverse polarity		Yes
Clamping voltage		Typ. 50 Vdc
Switching frequency	Resistive load	500 Hz Max.
	Inductive load	See the switching inductive load characteristics *(see page 145)*.
Isolation	Between input and internal bus	See note [1]
	Between channels	Not isolated

[1] The isolation of the electronic module is 500 Vac RMS between the electronics powered by the TM5 bus and those powered by 24 Vdc I/O power segment connected to the module. In practice, the TM5 electronic module is installed in the bus base, and there is a bridge between the TM5 power bus and the 24 Vdc I/O power segment. The two power circuits reference the same functional ground (FE) through specific components designed to reduce effects of electromagnetic interference. These components are rated at 30 Vdc or 60 Vdc. This effectively reduces isolation of the entire system from the 500 Vac RMS.

Switching Inductive Loads

The curves below provide the switching inductive load characteristics for the TM5SDO6T electronic module.

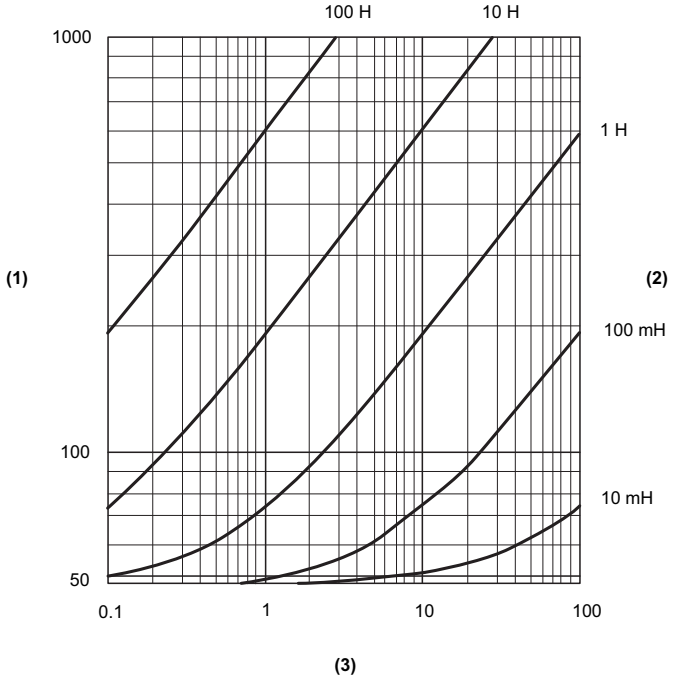

1 Load resistance in Ω
2 Load inductance
3 Max. operating cycles / second

TM5SDO6T Wiring Diagram

Wiring Diagram

The following illustration shows the wiring diagram for TM5SDO6T:

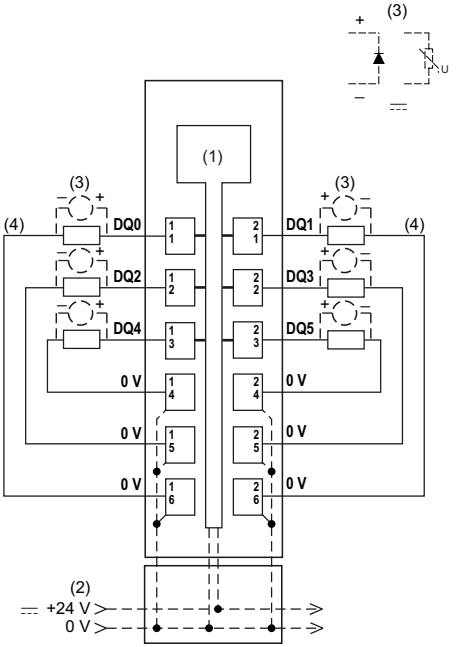

1 Internal electronics
2 24 Vdc I/O power segment integrated into the bus bases
3 Inductive load protection
4 2-wire load

⚠ WARNING

UNINTENDED EQUIPMENT OPERATION

Do not connect wires to unused terminals and/or terminals indicated as “No Connection (N.C.)”.

Failure to follow these instructions can result in death, serious injury, or equipment damage.

Chapter 16
TM5SDO8TA Electronic Module 8DO 24 Vdc Tr 2 A 1 Wire

What Is in This Chapter?

This chapter contains the following topics:

Topic	Page
TM5SDO8TA Presentation	148
TM5SDO8TA Characteristics	151
TM5SDO8TA Wiring Diagram	155

TM5SDO8TA Presentation

Main Characteristics

The table below describes the main characteristics of the TM5SDO8TA electronic module:

Main Characteristics	
Number of output channels	8
Output type	Transistor
Signal type	Source
Rated input voltage	24 Vdc
Output current	2 A max.

Ordering Information

The following illustration shows the TM5SDO8TA:

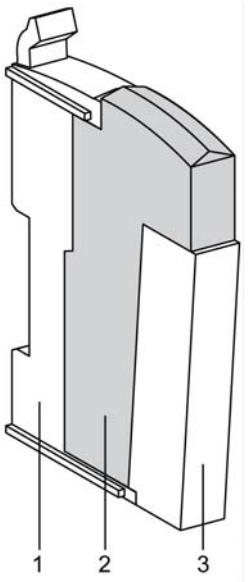

The table below shows the model numbers for the terminal block and the bus bases associated with the TM5SDO8TA:

Number	Model Number	Description	Color
1	TM5ACBM11 or TM5ACBM15	Bus base Bus base with address setting	White White
2	TM5SDO8TA	Electronic Module	White
3	TM5ACTB12	Terminal block, 12 pins	White

NOTE: For more information, refer to *TM5 bus bases and terminal blocks (see Modicon TM5 / TM7 Flexible System, System Planning and Installation Guide)*.

Status LEDs

The following illustration shows LEDs for TM5SDO8TA:

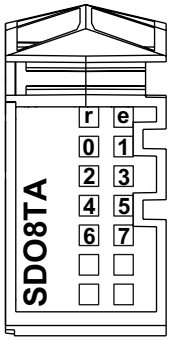

The table below shows the TM5SDO8TA status LEDs:

LEDs	Color	Status	Description
r	Green	Off	No power supply
		Single Flash	Reset state
		Flashing	Preoperational state
		On	Normal operation

NOTE:

(1) The e LED flashes when detecting one of the following errors on output channels:

- Short-circuit
- Overload

LEDs	Color	Status	Description
e	Red	Off	OK or no power supply
		Single flash	Error detected on output channels(1)
		Double flash	External I/O supply too low
e+r	Steady Red / Single Green flash		Invalid firmware
0 - 7	Yellow	Off	Corresponding output deactivated
		On	Corresponding output activated

NOTE:

(1) The e LED flashes when detecting one of the following errors on output channels:

- Short-circuit
- Overload

TM5SDO8TA Characteristics

Introduction

This is the description characteristics for TM5SDO8TA electronic module.

See also Environmental Characteristics *(see page 25)*.

⚠ DANGER

FIRE HAZARD

Use only the recommended wire sizes for the current capacity of the I/O channels and power supplies.

Failure to follow these instructions will result in death or serious injury.

⚠ WARNING

UNINTENDED EQUIPMENT OPERATION

Do not exceed any of the rated values specified in the environmental and electrical characteristics tables.

Failure to follow these instructions can result in death, serious injury, or equipment damage.

General Characteristics

The table below describes the general characteristics of the TM5SDO8TA electronic module:

General Characteristics	
Rated power supply voltage Power supply source	24 Vdc External power supply
Power supply range	20.4...28.8 Vdc
24 Vdc I/O segment current draw	0 mA
TM5 bus 5 Vdc current draw	44 mA
Power dissipation	1.50 W max.
Weight	25 g (0.9 oz)
ID code for firmware update	7069 dec

Output Characteristics

The table below describes the output characteristics of the TM5SDO8TA electronic module:

Output Characteristics		
Output channels		8
Wiring type		1 wire
Output current		2 A max. per output*
Total output current		8 A max.
Output voltage		24 Vdc
Output voltage range		20.4...28.8 Vdc
De-rating	- 10...55 °C (14...131 °F)	I = 1.5 A max. by channel*
	55...60 °C (131...140 °F)	I = 1 A max. by channel*
Voltage drop		0.5 Vdc max. at 2 A rated current
Leakage current when switched off		5 µA
Turn on time		300 µs max.
Turn off time		300 µs max.
Output protection		Against short-circuit and overload, thermal protection
Short-circuit output peak current		12 A max.
Automatic rearming after short-circuit or overload		Yes, 10 ms min. depending on internal temperature
Protection against reverse polarity		Yes
Clamping voltage		Typ. 50 Vdc
Switching frequency	Resistive load	500 Hz Max.
	Inductive load	See the switching inductive load characteristics *(see page 154)*.
Isolation	Between input and internal bus	See note [1]
	Between channels	Not isolated
* Refer to De-rating curve of the TM5SDO8TA *(see page 153)*		

[1] The isolation of the electronic module is 500 Vac RMS between the electronics powered by the TM5 bus and those powered by 24 Vdc I/O power segment connected to the module. In practice, the TM5 electronic module is installed in the bus base, and there is a bridge between the TM5 power bus and the 24 Vdc I/O power segment. The two power circuits reference the same functional ground (FE) through specific components designed to reduce effects of electromagnetic interference. These components are rated at 30 Vdc or 60 Vdc. This effectively reduces isolation of the entire system from the 500 Vac RMS.

De-rating of the TM5SDO8TA

It is possible to obtain the 2 A rating by observing temperature restrictions. Refer to the de-rating graph below. If the modules adjacent to the TM5SDO8TA dissipate no more than 1 W, this graph applies and 2 A / output can be maintained at 35 °C (95 °F).

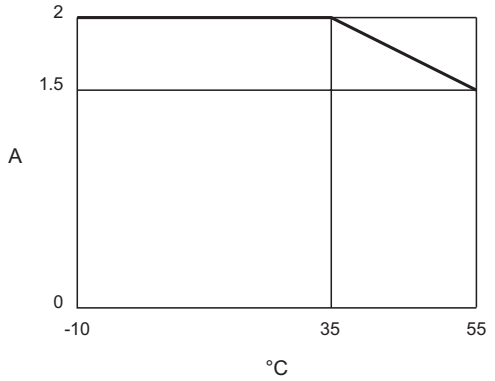

If the dissipation restriction of adjacent modules is not possible in your configuration, the de-rating must shift by -5 °C (- 9 °F), and 2 A / output can be maintained at 30 °C (86 °F). In most industrial applications, this would require the module to be in an air conditioned enclosure to maintain such temperatures.

Switching Inductive Loads

The curves below provide the switching inductive load characteristics for the TM5SDO8TA electronic module.

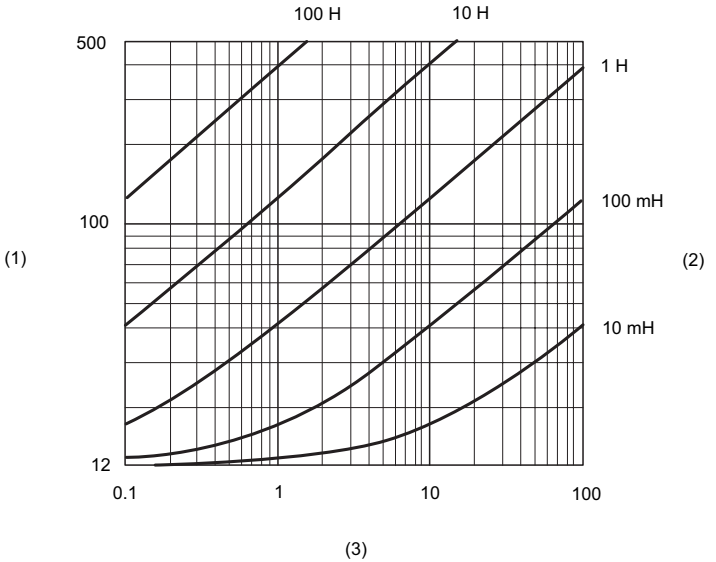

1 Coil resistance in Ω
2 Coil inductance
3 Max. operating cycles / second

TM5SDO8TA Wiring Diagram

Wiring Diagram

The following illustration shows the wiring diagram for the TM5SDO8TA:

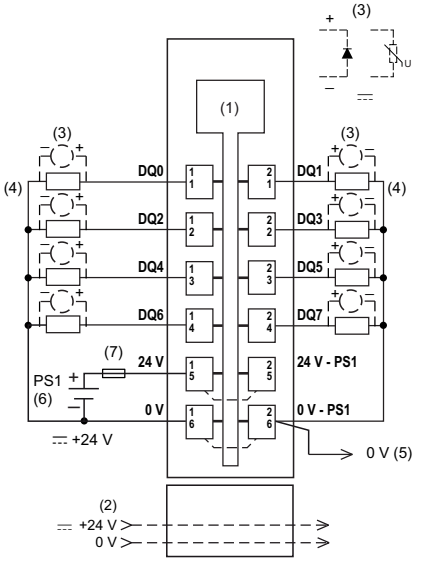

1 Internal electronics
2 24 Vdc I/O power segment integrated into the bus bases
3 Inductive load protection
4 2-wire load
5 0 Vdc I/O power segment by external connection
6 PS1: External isolated power supply 24 Vdc
7 External fuse, Type T slow-blow 8 A max., 250 V

⚠ WARNING

POTENTIAL OF OVERHEATING AND FIRE

- Do not connect the modules directly to line voltage.
- Use only isolating PELV or SELV power supplies to supply power to the modules.

Failure to follow these instructions can result in death, serious injury, or equipment damage.

⚠ WARNING

POTENTIAL EXPLOSION OR FIRE

Connect the returns from the devices to the same power source as the 24 Vdc I/O power segment serving the module.

Failure to follow these instructions can result in death, serious injury, or equipment damage.

⚠ WARNING

UNINTENDED EQUIPMENT OPERATION

Do not connect wires to unused terminals and/or terminals indicated as “No Connection (N.C.)”.

Failure to follow these instructions can result in death, serious injury, or equipment damage.

Refer to Protecting Outputs from Inductive Load Damage for additional important information on this topic.

Chapter 17
TM5SDO12T Electronic Module 12DO 24 Vdc Tr 0.5 A 1 Wire

What Is in This Chapter?

This chapter contains the following topics:

Topic	Page
TM5SDO12T Presentation	158
TM5SDO12T Characteristics	161
TM5SDO12T Wiring Diagram	164

TM5SDO12T Presentation

Main Characteristics

The table below describes the main characteristics of the TM5SDO12T electronic module:

Main Characteristics	
Number of output channels	12
Output type	Transistor
Signal type	Source
Rated input voltage	24 Vdc
Output current	0.5 A max.

Ordering Information

The following illustration shows the TM5SDO12T:

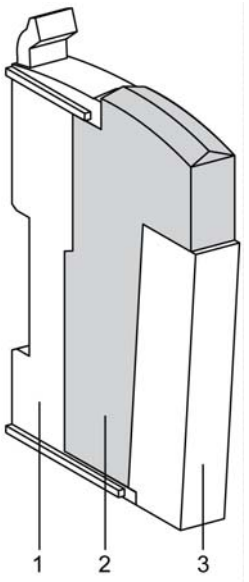

The table below shows the model numbers for the terminal block and the bus bases associated with the TM5SDO12T:

Number	Model Number	Description	Color
1	TM5ACBM11 or TM5ACBM15	Bus base Bus base with address setting	White White
2	TM5SDO12T	Electronic Module	White
3	TM5ACTB12	Terminal block, 12 pins	White

NOTE: For more information, refer to *TM5 bus bases and terminal blocks (see Modicon TM5 / TM7 Flexible System, System Planning and Installation Guide)*.

Status LEDs

The following illustration shows LEDs for TM5SDO12T:

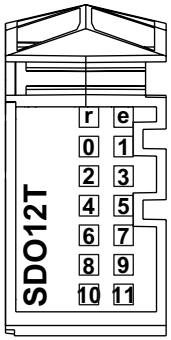

The table below shows the TM5SDO12T status LEDs:

LEDs	Color	Status	Description
r	Green	Off	No power supply
		Single Flash	Reset state
		Flashing	Preoperational state
		On	Normal operation

NOTE:

(1) The e LED flashes when detecting one of the following errors on output channels:

- Short circuit
- Overload
- No I/O supply but the TM5 bus still powered and the output is activated

LEDs	Color	Status	Description
e	Red	Off	OK or no power supply
		Single flash	Error detected on output channels(1)
e+r	Steady Red / Single Green flash		Invalid firmware
0 - 11	Yellow	Off	Corresponding output deactivated
		On	Corresponding output activated

NOTE:

(1) The e LED flashes when detecting one of the following errors on output channels:

- Short circuit
- Overload
- No I/O supply but the TM5 bus still powered and the output is activated

TM5SDO12T Characteristics

Introduction

This is the description characteristics for the TM5SDO12T electronic module.

See also Environmental Characteristics *(see page 25)*.

⚠ DANGER

FIRE HAZARD

Use only the recommended wire sizes for the current capacity of the I/O channels and power supplies.

Failure to follow these instructions will result in death or serious injury.

⚠ WARNING

UNINTENDED EQUIPMENT OPERATION

Do not exceed any of the rated values specified in the environmental and electrical characteristics tables.

Failure to follow these instructions can result in death, serious injury, or equipment damage.

General Characteristics

The table below describes the general characteristics of the TM5SDO12T electronic module:

General Characteristics	
Rated power supply voltage Power supply source	24 Vdc Connected to the 24 Vdc I/O power segment
Power supply range	20.4...28.8 Vdc
24 Vdc I/O segment current draw	48 mA
TM5 bus 5 Vdc current draw	52 mA
Power dissipation	2.04 W max.
Weight	25 g (0.9 oz)
ID code for firmware update	7066 dec

Output Characteristics

The table below describes the output characteristics of the TM5SDO12T electronic module:

Output Characteristics		
Output channels		12
Wiring type		1 wire
Output current		0.5 A max. per output
Total output current		6 A max.
Output voltage		24 Vdc
Output voltage range		20.4...28.8 Vdc
De-rating	55...60 °C (131...140 °C)	I = 0.4 A max. by channel
Voltage drop		0.3 Vdc max. at 0.5 A rated current
Leakage current when switched off		5 µA
Turn on time		300 µs max.
Turn off time		300 µs max.
Output protection		Against short-circuit and overload, thermal protection
Short circuit output peak current		12 A max.
Automatic rearming after short circuit or overload		Yes, 10 ms min. depending on internal temperature
Protection against reverse polarity		Yes
Clamping voltage		Typ. 50 Vdc
Switching frequency	Resistive load	500 Hz Max.
	Inductive load	See the switching inductive load characteristics *(see page 163)*.
Isolation	Between input and internal bus	See note [1]
	Between channels	Not isolated

[1] The isolation of the electronic module is 500 Vac RMS between the electronics powered by the TM5 bus and those powered by 24 Vdc I/O power segment connected to the module. In practice, the TM5 electronic module is installed in the bus base, and there is a bridge between the TM5 power bus and the 24 Vdc I/O power segment. The two power circuits reference the same functional ground (FE) through specific components designed to reduce effects of electromagnetic interference. These components are rated at 30 Vdc or 60 Vdc. This effectively reduces isolation of the entire system from the 500 Vac RMS.

Switching Inductive Loads

The curves below provide the switching inductive load characteristics for the TM5SDO12T electronic module.

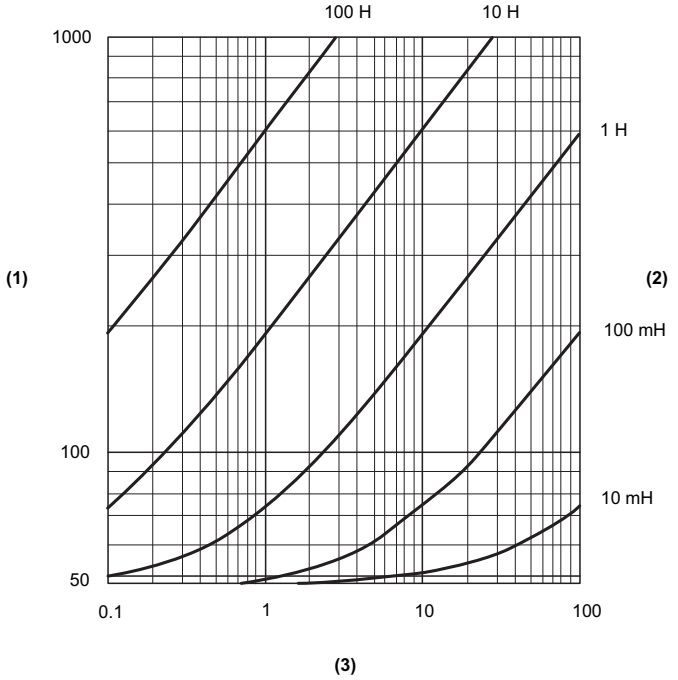

1 Load resistance in Ω
2 Load inductance
3 Max. operating cycles / second

TM5SDO12T Wiring Diagram

Wiring Diagram

The following illustration shows the wiring diagram for the TM5SDO12T:

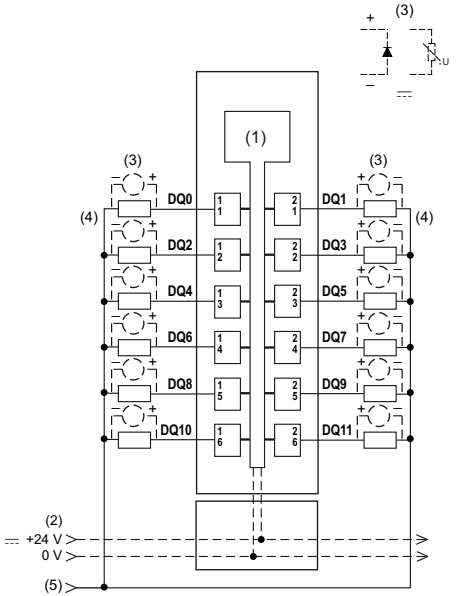

1 Internal electronics
2 24 Vdc I/O power segment integrated into the bus bases
3 Inductive load protection
4 2-wire load
5 0 Vdc I/O power segment by external connection

NOTE: I/O electronic modules and the field devices connected to them must all reside on the same 24 Vdc I/O power segment. If not, the status LEDs may not function correctly. In addition, there may potentially be more significant consequences such as an explosion and/or fire hazard.

⚠ WARNING

POTENTIAL EXPLOSION OR FIRE

Connect the returns from the devices to the same power source as the 24 Vdc I/O power segment serving the module.

Failure to follow these instructions can result in death, serious injury, or equipment damage.

The 12-output TM5SDO12T electronic module can independently support 1-wire devices. To connect 2-wire devices, you can add a TM5SPDG12F Common Distribution module.

The following illustration shows the wiring diagram for the TM5SPDG12F and TM5SDO12T:

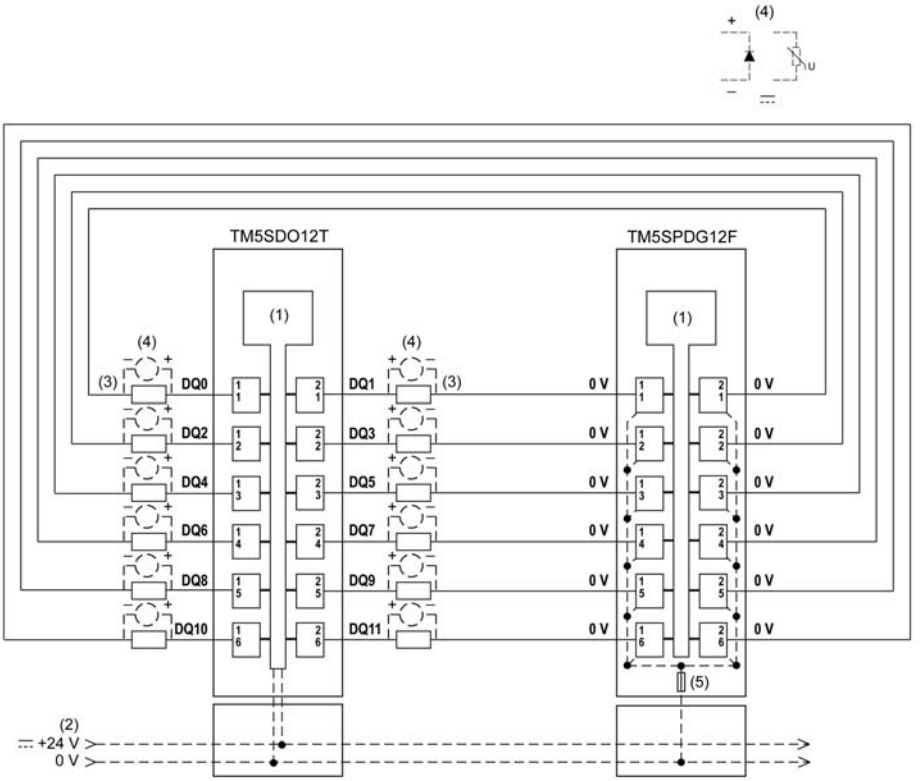

1 Internal electronics
2 24 Vdc I/O power segment integrated into the bus bases
3 2-wire load
4 Inductive load protection
5 Integrated fuse type T slow-blow 6.3 A 250 V exchangeable

⚠ WARNING

UNINTENDED EQUIPMENT OPERATION

Do not connect wires to unused terminals and/or terminals indicated as “No Connection (N.C.)”.

Failure to follow these instructions can result in death, serious injury, or equipment damage.

Chapter 18
TM5SDO16T Electronic Module 16DO 24 Vdc Tr 0.5 A 1 Wire

What Is in This Chapter?

This chapter contains the following topics:

Topic	Page
TM5SDO16T Presentation	168
TM5SDO16T Characteristics	170
TM5SDO16T Wiring Diagram	174

TM5SDO16T Presentation

Main Characteristics

The table below describes the main characteristics of the TM5SDO16T electronic module:

Main Characteristics	
Number of output channels	16
Output type	Transistor
Signal type	Source
Rated input voltage	24 Vdc
Output current	0.5 A max.

Ordering Information

The following illustration shows the TM5SDO16T:

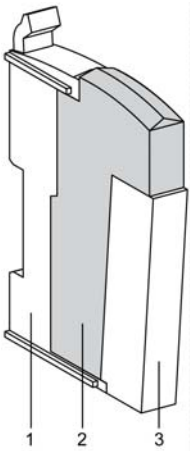

The table below shows the model numbers for the terminal block and the bus bases associated with the TM5SDO16T:

Number	Model Number	Description	Color
1	TM5ACBM11	Bus base	White White
2	TM5SDO16T	Electronic Module	White
3	TM5ACTB16	Terminal block, 16 pins	White

NOTE: For more information, refer to *TM5 bus bases and terminal blocks (see Modicon TM5 / TM7 Flexible System, System Planning and Installation Guide)*.

Status LEDs

The following illustration shows LEDs for TM5SDO16T:

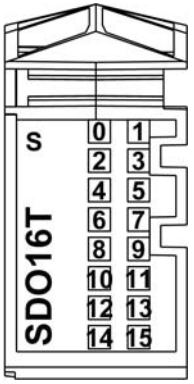

The table below shows the TM5SDO16T status LEDs:

LEDs	Color	Status	Description
s	Green	Off	No power supply
		Single Flash	Reset state
		Flashing	Preoperational state
		On	Normal operation
	Red	Off	OK or no power supply
		Single flash	Error detected on output channels(1)
	Steady Red / Single Green flash		Invalid firmware
0 - 15	Yellow	Off	Corresponding output deactivated
		On	Corresponding output activated

NOTE:

(1) When the diagnostic of the outputs is activated, the s LED flashes when detecting one of the following errors on output channels:

- Short -circuit
- Overload
- Status of output not corresponding to the command status

TM5SDO16T Characteristics

Introduction

This is the description characteristics for the TM5SDO16T electronic module.

See also Environmental Characteristics *(see page 25)*.

⚠ DANGER

FIRE HAZARD

Use only the recommended wire sizes for the current capacity of the I/O channels and power supplies.

Failure to follow these instructions will result in death or serious injury.

⚠ WARNING

UNINTENDED EQUIPMENT OPERATION

Do not exceed any of the rated values specified in the environmental and electrical characteristics tables.

Failure to follow these instructions can result in death, serious injury, or equipment damage.

General Characteristics

The table below describes the general characteristics of the TM5SDO16T electronic module:

General Characteristics	
Rated power supply voltage Power supply source	24 Vdc Connected to the 24 Vdc I/O power segment
Power supply range	20.4...28.8 Vdc
24 Vdc I/O segment current draw	40 mA
TM5 bus 5 Vdc current draw	56 mA
Power dissipation	1.79 W max.
Weight	24 g (0.8 oz)
ID code for firmware update	56839 dec

Output Characteristics

The table below describes the output characteristics of the TM5SDO16T electronic module:

Output Characteristics		
Output channels		16
Wiring type		1 wire
Output current		0.5 A max. per output
Total output current		8 A max.
Output voltage		24 Vdc
Output voltage range		20.4...28.8 Vdc
De-rating		See section Current de-rating
Voltage drop		0.1 Vdc max. at 0.5 A rated current
Leakage current when switched off		5 µA
Turn on time		300 µs max.
Turn off time		300 µs max.
Output diagnostic		Output monitoring with 10 ms delay, the function is activated or desactivated by software.
Output protection		Against short-circuit and overload, thermal protection
Short -circuit output peak current		3 A max.
Automatic rearming after short -circuit or overload		Yes, 10 ms min. depending on internal temperature
Protection against reverse polarity		Yes
Clamping voltage		Typ. 45 Vdc
Switching frequency	Resistive load	500 Hz Max.
	Inductive load	See the switching inductive load characteristics *(see page 163)*.
Isolation	Between input and internal bus	See note [1]
	Between channels	Not isolated

[1] The isolation of the electronic module is 500 Vac RMS between the electronics powered by the TM5 bus and those powered by 24 Vdc I/O power segment connected to the module. In practice, the TM5 electronic module is installed in the bus base, and there is a bridge between the TM5 power bus and the 24 Vdc I/O power segment. The two power circuits reference the same functional ground (FE) through specific components designed to reduce effects of electromagnetic interference. These components are rated at 30 Vdc or 60 Vdc. This effectively reduces isolation of the entire system from the 500 Vac RMS.

Current de-rating

The following illustration shows the current de-rating in vertical installation:

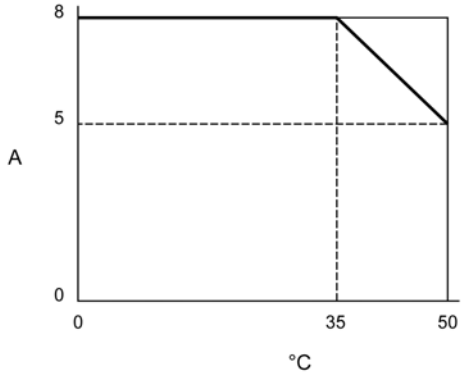

A Total current
°**C** Ambient temperature

The following illustration shows the current de-rating in horizontal installation:

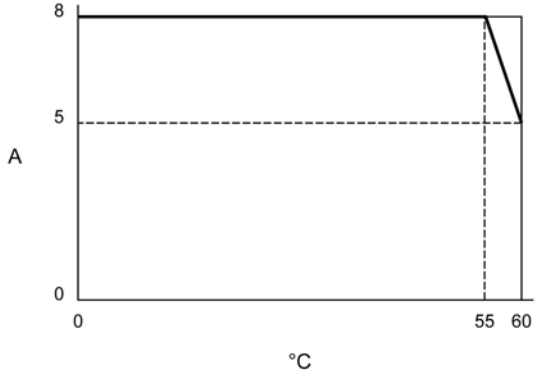

A Total current
°**C** Ambient temperature

Switching Inductive Loads

The curves below provide the switching inductive load characteristics for the TM5SDO16T electronic module.

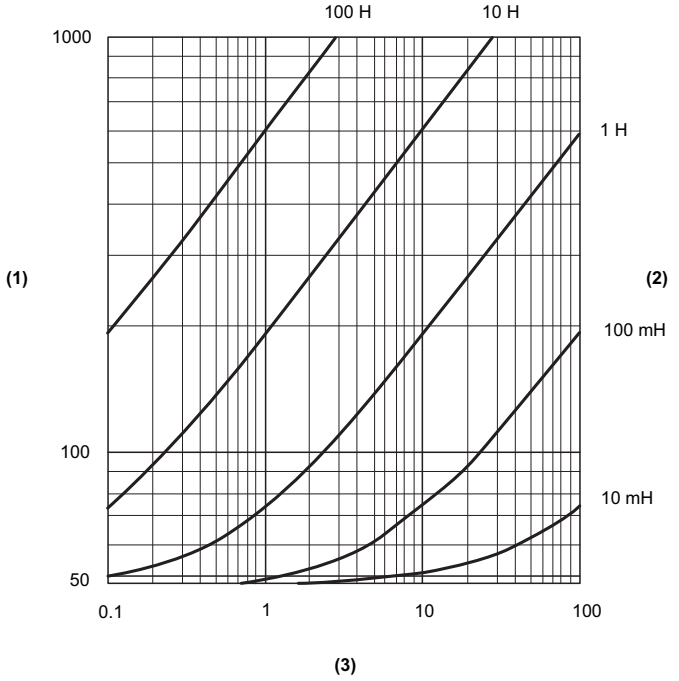

1 Load resistance in Ω
2 Load inductance
3 Max. operating cycles / second

TM5SDO16T Wiring Diagram

Wiring Diagram

The following illustration shows the wiring diagram for the TM5SDO16T:

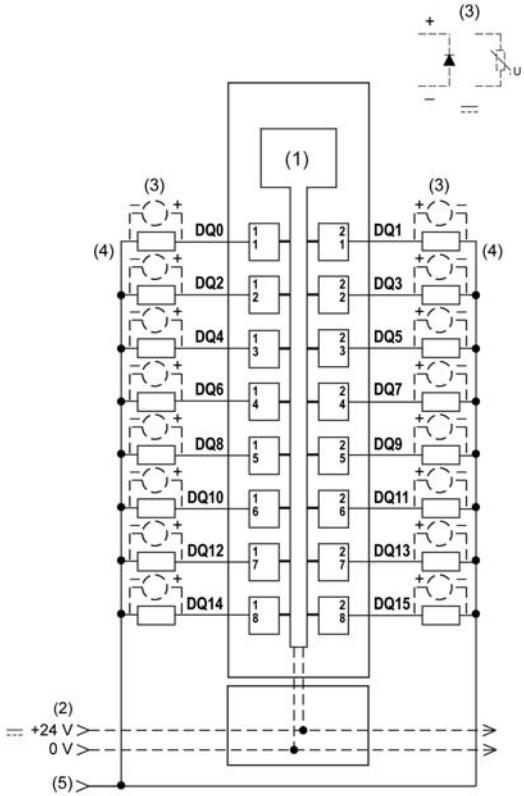

1 Internal electronics
2 24 Vdc I/O power segment integrated into the bus bases
3 Inductive load protection
4 2-wire load
5 0 Vdc I/O power segment by external connection

NOTE: I/O electronic modules and the field devices connected to them must all reside on the same 24 Vdc I/O power segment. If not, the status LEDs may not function correctly. In addition, there may potentially be more significant consequences such as an explosion and/or fire hazard.

⚠ WARNING

POTENTIAL EXPLOSION OR FIRE

Connect the returns from the devices to the same power source as the 24 Vdc I/O power segment serving the module.

Failure to follow these instructions can result in death, serious injury, or equipment damage.

⚠ WARNING

UNINTENDED EQUIPMENT OPERATION

Do not connect wires to unused terminals and/or terminals indicated as “No Connection (N.C.)”.

Failure to follow these instructions can result in death, serious injury, or equipment damage.

Chapter 19
TM5SDO2R Electronic Module 2DO 30 Vdc/230 Vac 5A Relay C/O

What Is in This Chapter?

This chapter contains the following topics:

Topic	Page
TM5SDO2R Presentation	178
TM5SDO2R Characteristics	180
TM5SDO2R Wiring Diagram	183

TM5SDO2R Presentation

Main Characteristics

The table below describes the main characteristics of the TM5SDO2R electronic module:

Main Characteristics	
Number of output channels	2
Output type	Relay
Rated input voltage	30 Vdc / 230 Vac
Output current	5 A max.

Ordering Information

The following illustration shows the TM5SDO2R:

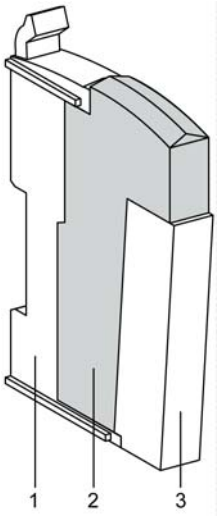

The table below shows the model numbers for the terminal block and the bus bases associated with the TM5SDO2R:

Number	Model Number	Description	Color
1	TM5ACBM12	Bus base	Black
2	TM5SDO2R	Electronic Module	Black
3	TM5ACTB32	Terminal block, 12 pins	Black

NOTE: For more information, refer to *TM5 bus bases and terminal blocks (see Modicon TM5 / TM7 Flexible System, System Planning and Installation Guide)*.

Status LEDs

The following illustration shows LEDs for TM5SDO2R:

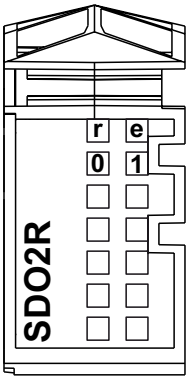

The table below shows the TM5SDO2R status LEDs:

LEDs	Color	Status	Description
r	Green	Off	No power supply
		Single Flash	Reset state
		Flashing	Preoperational state
		On	Normal operation
e	Red	Off	OK or no power supply
		On	Error detected or reset state
e+r	Steady Red / Single Green flash		Invalid firmware
0 - 1	Yellow	Off	Corresponding output deactivated
		On	Corresponding output activated

TM5SDO2R Characteristics

Introduction

This is the description characteristics for the TM5SDO2R electronic module.

See also Environmental Characteristics *(see page 25)*.

⚠ DANGER

FIRE HAZARD

Use only the recommended wire sizes for the current capacity of the I/O channels and power supplies.

Failure to follow these instructions will result in death or serious injury.

⚠ WARNING

UNINTENDED EQUIPMENT OPERATION

Do not exceed any of the rated values specified in the environmental and electrical characteristics tables.

Failure to follow these instructions can result in death, serious injury, or equipment damage.

General Characteristics

The table below describes the general characteristics of the TM5SDO2R electronic module:

General Characteristics	
Rated power supply voltage Power supply source	30 Vdc / 230 Vac Connected to the external AC or DC power
Power supply range	24 Vdc...36 Vdc 184 Vac...276 Vac
24 Vdc I/O segment current draw	0 mA (N.C.)
TM5 bus 5 Vdc current draw	90 mA
Power dissipation	2.45 W max.
Weight	25 g (0.9 oz.)
ID code for firmware update	8410 dec

Output Characteristics

The table below describes the output characteristics of the TM5SDO2R electronic module:

Output Characteristics		
Output channels		2
Wiring type		2 (C/O) contacts
Output current		5 A max. per output at 30 Vdc 5 A max. per output at 230 Vac
Total output current		10 A max. at 30 Vdc 10 A max. at 230 Vac
Output voltage		30 Vdc / 230 Vac
Output voltage range		24 Vdc...36 Vdc 184 Vac...276 Vac
De-rating	55...60 °C (131...140 °F)	I = 3 A max. by channel
Turn on time		10 ms max.
Turn off time		10 ms max.
Protective circuit	Internal	None
	External DC AC	 Inverse diode, RC combination or VDR RC combination or VDR
Automatic rearming after short -circuit or overload		Yes, 10 ms min. depending on internal temperature
Switching capacity	Minimum	10 mA at 5 Vdc
	Maximum	180 W / 1500 VA
Protection against reverse polarity		Yes
Isolation	Between channels and bus	See note [1]
	Between channels	Not isolated
Mechanical durability		Typically $2x10^7$ cycles or more

[1] The isolation of the electronic module is 500 Vac RMS between the electronics powered by the TM5 bus and those powered by 24 Vdc I/O power segment connected to the module. In practice, the TM5 electronic module is installed in the bus base, and there is a bridge between the TM5 power bus and the 24 Vdc I/O power segment. The two power circuits reference the same functional ground (FE) through specific components designed to reduce effects of electromagnetic interference. These components are rated at 30 Vdc or 60 Vdc. This effectively reduces isolation of the entire system from the 500 Vac RMS.

If your controller or module contains relay outputs, these types of outputs can support up to 240 Vac. Inductive damage to these types of outputs can result in welded contacts and loss of control. Each inductive load must include a protection device such as a peak limiter, RC circuit or flyback diode. Capacitive loads are not supported by these relays.

⚠ WARNING

RELAY OUTPUTS WELDED CLOSED

- Always protect relay outputs from inductive alternating current load damage using an appropriate external protective circuit or device.
- Do not connect relay outputs to capacitive loads.

Failure to follow these instructions can result in death, serious injury, or equipment damage.

Electric Durability

The curves below provide the expected life of the relay contacts for the TM5SDO2R electronic module.

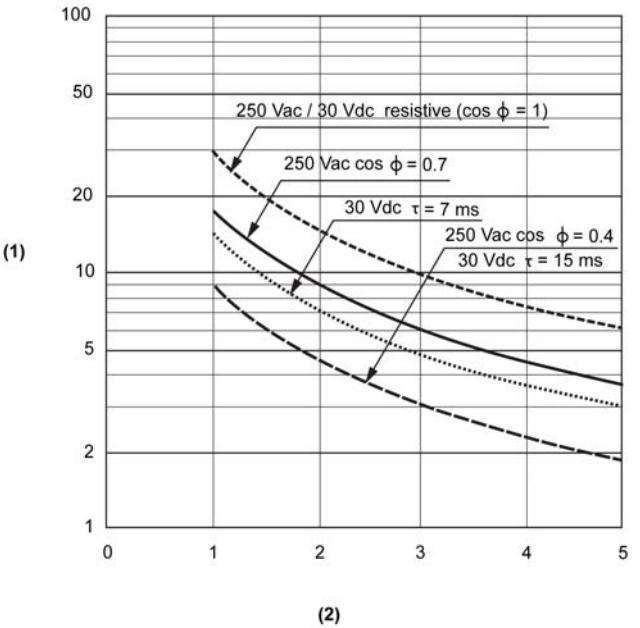

1 Switching procedures ($x10^4$)
2 Switching current in A

TM5SDO2R Wiring Diagram

Wiring Diagram

The following illustration shows the wiring diagram for TM5SDO2R:

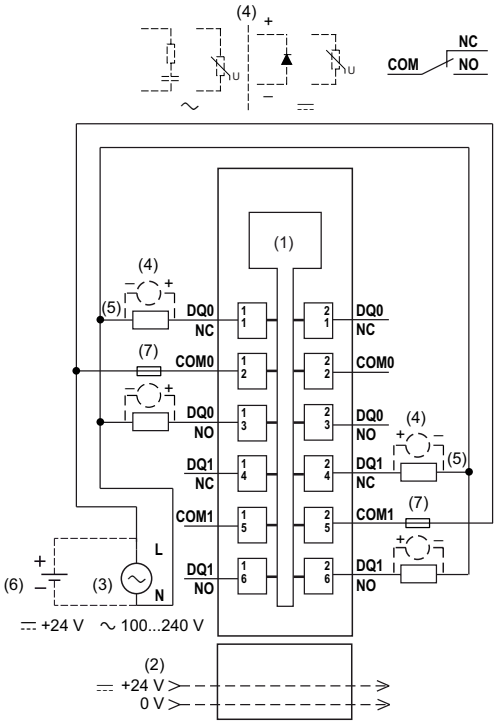

1 Internal electronics
2 24 Vdc I/O power segment integrated into the bus bases
3 External power supply 100...240 Vac
4 Inductive load protection
5 2-wire load
6 External power supply 24 Vdc
7 External fuse type T slow-blow 5 A - 250 V

⚠ WARNING

UNINTENDED EQUIPMENT OPERATION

Do not connect wires to unused terminals and/or terminals indicated as “No Connection (N.C.)”.

Failure to follow these instructions can result in death, serious injury, or equipment damage.

Chapter 20
TM5SDO4R Electronic Module 4DO 30 Vdc / 230 Vac 5 A Relay N/O

What Is in This Chapter?

This chapter contains the following topics:

Topic	Page
TM5SDO4R Presentation	186
TM5SDO4R Characteristics	188
TM5SDO4R Wiring Diagram	191

TM5SDO4R Presentation

Main Characteristics

The table below describes the main characteristics of the TM5SDO4R electronic module:

Main Characteristics	
Number of output channels	4
Output type	Relay
Rated input voltage	30 Vdc / 230 Vac
Output current	5 A max.

Ordering Information

The following illustration shows the TM5SDO4R:

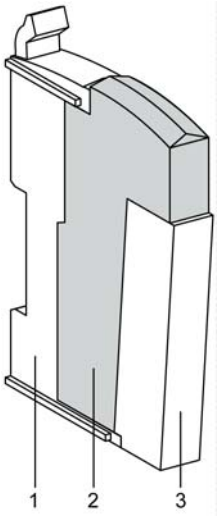

The table below shows the model numbers for the terminal blocks and the bus bases associated with the TM5SDO4R:

Number	Model Number	Description	Color
1	TM5ACBM12	Bus base	Black
2	TM5SDO4R	Electronic Module	Black
3	TM5ACTB32	Terminal block, 12 pins	Black

NOTE: For more information, refer to *TM5 bus bases and terminal blocks (see Modicon TM5 / TM7 Flexible System, System Planning and Installation Guide)*.

Status LEDs

The following illustration shows LEDs for TM5SDO4R:

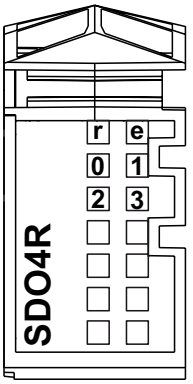

The table below shows the TM5SDO4R status LEDs:

LEDs	Color	Status	Description
r	Green	Off	No power supply
		Single Flash	Reset state
		Flashing	Preoperational state
		On	Normal operation
e	Red	Off	OK or no power supply
		On	Error detected or reset state
e+r	Steady Red / Single Green flash		Invalid firmware
0 - 3	Yellow	Off	Corresponding output deactivated
		On	Corresponding output activated

TM5SDO4R Characteristics

Introduction

This is the description characteristics for the TM5SDO4R electronic module.

See also Environmental Characteristics *(see page 25)*.

⚠ DANGER

FIRE HAZARD

Use only the recommended wire sizes for the current capacity of the I/O channels and power supplies.

Failure to follow these instructions will result in death or serious injury.

⚠ WARNING

UNINTENDED EQUIPMENT OPERATION

Do not exceed any of the rated values specified in the environmental and electrical characteristics tables.

Failure to follow these instructions can result in death, serious injury, or equipment damage.

General Characteristics

The table below describes the general characteristics of the TM5SDO4R electronic module:

General Characteristics	
Rated power supply voltage Power supply source	30 Vdc / 230 Vac Connected to an external AC or DC power
Power supply range	24 Vdc ... 36 Vdc 184 Vac ... 276 Vac
24 Vdc I/O segment current draw	0 mA (N.C.)
TM5 bus 5 Vdc current draw	160 mA
Power dissipation	2.30 W max.
Weight	30 g (1.1 oz)
ID code for firmware update	42756 dec

Output Characteristics

The table below describes the output characteristics of the TM5SDO4R electronic module:

Output Characteristics		
Output channels		4
Wiring type		4 (C/O) contacts
Output current		5 A max. per output at 30 Vdc 5 A max. per output at 230 Vac
Total output current		10 A max. at 30 Vdc 10 A max. at 230 Vac
Output voltage		30 Vdc / 230 Vac
Output voltage range		24 Vdc ... 36 Vdc 184 Vac ... 276 Vac
Turn on time		10 ms max.
Turn off time		10 ms max.
Protective circuit	Internal	None
	External DC AC	 Inverse diode, RC combination or VDR RC combination or VDR
Automatic rearming after short-circuit or overload		Yes, 10 ms min. depending on internal temperature
Switching capacity	Minimum	10 mA at 5 Vdc
	Maximum	150 W / 1250 VA
Protection against reverse polarity		Yes
Isolation	Between channels and bus	See note [1]
	Between outputs	Not isolated
Mechanical durability		Typically $2x10^7$ cycles or more

[1] The isolation of the electronic module is 500 Vac RMS between the electronics powered by the TM5 bus and those powered by 24 Vdc I/O power segment connected to the module. In practice, the TM5 electronic module is installed in the bus base, and there is a bridge between the TM5 power bus and the 24 Vdc I/O power segment. The two power circuits reference the same functional ground (FE) through specific components designed to reduce effects of electromagnetic interference. These components are rated at 30 Vdc or 60 Vdc. This effectively reduces isolation of the entire system from the 500 Vac RMS.

If your controller or module contains relay outputs, these types of outputs can support up to 240 Vac. Inductive damage to these types of outputs can result in welded contacts and loss of control. Each inductive load must include a protection device such as a peak limiter, RC circuit or flyback diode. Capacitive loads are not supported by these relays.

⚠ WARNING

RELAY OUTPUTS WELDED CLOSED

- Always protect relay outputs from inductive alternating current load damage using an appropriate external protective circuit or device.
- Do not connect relay outputs to capacitive loads.

Failure to follow these instructions can result in death, serious injury, or equipment damage.

Electric Durability

The curves below provide the expected life of the relay contacts for the TM5SDO2R electronic module.

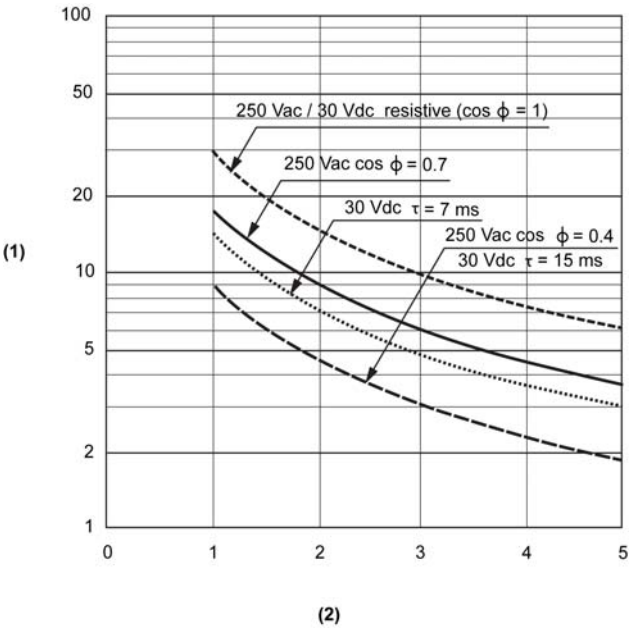

1 Switching procedures (x10^4)
2 Switching current in A

TM5SDO4R Wiring Diagram

Wiring Diagram

The following illustration shows the wiring diagram for TM5SDO4R:

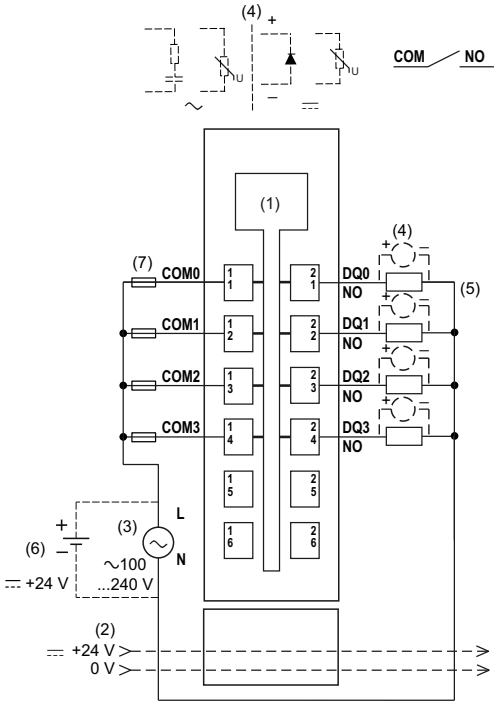

1 Internal electronics
2 24 Vdc I/O power segment integrated into the bus bases
3 External power supply 100...240 Vac
4 Inductive load protection
5 2-wire load
6 External power supply 24 Vdc
7 External fuse type T slow-blow 5 A - 250 V

⚠ WARNING

UNINTENDED EQUIPMENT OPERATION

Do not connect wires to unused terminals and/or terminals indicated as “No Connection (N.C.)”.

Failure to follow these instructions can result in death, serious injury, or equipment damage.

Chapter 21
TM5SDO2S Electronic Module 2DO 240 Vac Triac 1 A 3 Wires

What Is in This Chapter?

This chapter contains the following topics:

Topic	Page
TM5SDO2S Presentation	194
TM5SDO2S Characteristics	196
TM5SDO2S Wiring Diagram	198

TM5SDO2S Presentation

Main Characteristics

The table below describes the main characteristics of the TM5SDO2S electronic module:

Main Characteristics	
Number of output channels	2
Output type	Triac
Signal type	Source
Rated output voltage	100...240 Vac
Output current	1 A max.

Ordering Information

The following illustration shows the TM5SDO2S:

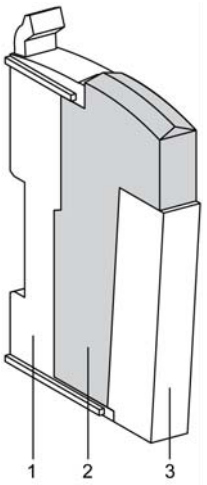

The table below shows the model numbers for the terminal block and the bus base associated with the TM5SDO2S:

Number	Model Number	Description	Color
1	TM5ACBM12	Bus base	Black
2	TM5SDO2S	Electronic Module	Black
3	TM5ACTB32	Terminal block, 12 pins	Black

NOTE: For more information, refer to *TM5 bus bases and terminal blocks (see Modicon TM5 / TM7 Flexible System, System Planning and Installation Guide)*.

Status LEDs

The following illustration shows LEDs for TM5SDO2S:

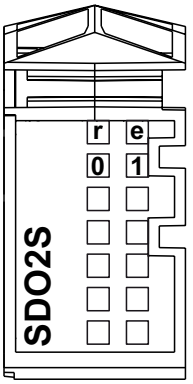

The table below shows the TM5SDO2S diagnostic LEDs:

LEDs	Color	Status	Description
r	Green	Off	No external power supply
		Single Flash	Reset state
		Flashing	Preoperational state
		On	Normal operation
e	Red	Off	OK or no external power supply
		On	Error detected or reset state
		Single flash	Zero cross-over signal has dropped out.[1]
e+r	Steady Red / Single Green flash		Invalid firmware
0 - 1	Yellow	Off	Corresponding output deactivated
		On	Corresponding output activated

[1] Zero cross-over detection is activated at the first zero crossover after being switched on .

TM5SDO2S Characteristics

Introduction

This is the description characteristics for TM5SDO2S electronic module.

See also Environmental Characteristics *(see page 25)*.

⚠ DANGER

FIRE HAZARD

Use only the recommended wire sizes for the current capacity of the I/O channels and power supplies.

Failure to follow these instructions will result in death or serious injury.

⚠ WARNING

UNINTENDED EQUIPMENT OPERATION

Do not exceed any of the rated values specified in the environmental and electrical characteristics tables.

Failure to follow these instructions can result in death, serious injury, or equipment damage.

General Characteristics

The table below describes the general characteristics of the TM5SDO2S electronic module:

Electrical Characteristics	
Rated power supply voltage Power supply source	100...240 Vac Connected to the external AC power
Power supply range	80...264 Vac
24 Vdc I/O segment current draw	–
TM5 bus 5 Vdc current draw	70 mA
Power dissipation	2.13 W max.
Weight	25 g (0.9 oz)
ID code for firmware update	9851 dec

Output Characteristics

The table below describes the output characteristics of the TM5SDO2S electronic module:

Output Characteristics		
Output channels		2
Wiring type		2 or 3 wires
Output current		1 A max. per output
Total output current		1 A max.
Output voltage		100...240 Vac
Output voltage range		80...264 Vac
De-rating	- 10...55 °C (14...131 °F)	I = 1 A max. by channel
	55...60 °C (131...140 °F)	I = 0.3 A max. by channel
Voltage drop		1.5 V_{RMS}
Leakage current		10 mA max. at 240V_{RMS}
Turn on time		11 ms max. at 50 Hz and 9.3 ms max. at 60 Hz
Turn off time		11 ms max. at 50 Hz and 9.3 ms max. at 60 Hz
Zero cross-over switches		Yes
Over voltage protection between L and N		Yes
Surge current		40 A for 20 ms max. and 10 A for 1 s max.
Automatic rearming after short circuit or overload		Yes, 10 ms min. depending on internal temperature
Isolation	Between output and internal bus	2500 Vac after 1 minute
	Between channels	Not isolated

Actuator Supply

The table below describes the actuator supply of the TM5SDO2S electronic module:

Supply	
Voltage	External power supply.
Voltage drop for internal protection at 500 mA	1.5 $V_{RMS\ max.}$

TM5SDO2S Wiring Diagram

Wiring Diagram

The following illustration shows the wiring diagram for TM5SDO2S:

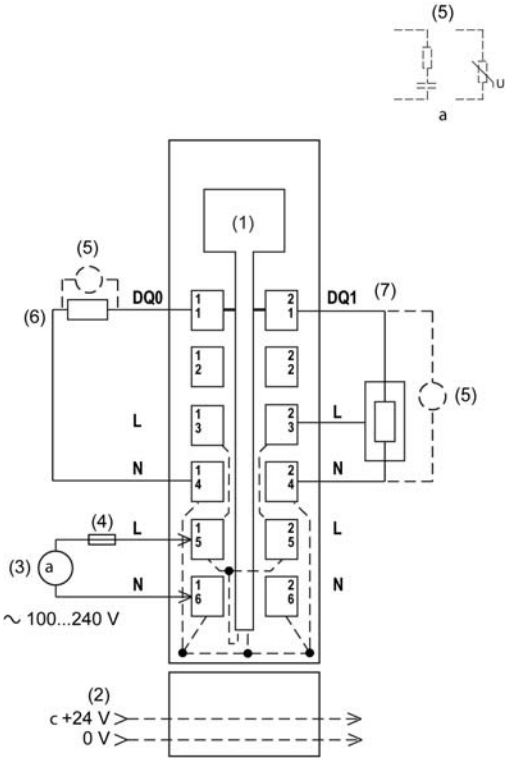

1 Internal electronics
2 24 Vdc I/O power segment integrated into the bus bases
3 External power supply 100...240 Vac
4 External fuse type T slow-blow 3.15 A - 250 V
5 Inductive load protection
6 2-wire load
7 3-wire load

⚠ WARNING

UNINTENDED EQUIPMENT OPERATION

Do not connect wires to unused terminals and/or terminals indicated as “No Connection (N.C.)”.

Failure to follow these instructions can result in death, serious injury, or equipment damage.

⚠ WARNING

UNINTENDED EQUIPMENT OPERATION

Use the sensor and actuator power supply only for supplying power to sensors or actuators connected to the module.

Failure to follow these instructions can result in death, serious injury, or equipment damage.

Refer to Protecting Outputs from Inductive Load Damage for additional important information on this topic.

Part IV
TM5 System Digital Mixed Input/Output

What Is in This Part?

This part contains the following chapters:

Chapter	Chapter Name	Page
22	TM5SDM12DT Electronic Module 8DI/4DO 24 Vdc Tr 0.5 A 1 Wire	203
23	TM5SMM6D2L Electronic Module 4DI/2DO 24Vdc Tr 0.5A / 1AI/1AO ±10V/0-20mA 12 Bits	213

Chapter 22
TM5SDM12DT Electronic Module 8DI/4DO 24 Vdc Tr 0.5 A 1 Wire

What Is in This Chapter?

This chapter contains the following topics:

Topic	Page
TM5SDM12DT Presentation	204
TM5SDM12DT Characteristics	207
TM5SDM12DT Wiring Diagram	211

TM5SDM12DT Presentation

Main Characteristics

The table below describes the main characteristics of the TM5SDM12DT electronic module:

Main Characteristics	
Number of input channels	8
Input type	Type 1
Input signal type	Sink
Number of output channels	4
Output type	Transistor
Output signal type	Source
Output current	0.5 A max.
Rated input voltage	24 Vdc

Ordering Information

The illustration below shows the TM5SDM12DT:

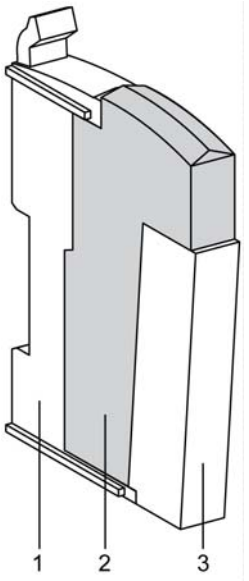

The table below shows the model numbers for the terminal block and the bus bases associated with the TM5SDM12DT:

Number	Model Number	Description	Color
1	TM5ACBM11 or TM5ACBM15	Bus base Bus base with address setting	White White
2	TM5SDM12DT	Electronic Module	White
3	TM5ACTB12	Terminal block, 12 pins	White

NOTE: For more information, refer to *TM5 bus bases and terminal blocks (see Modicon TM5 / TM7 Flexible System, System Planning and Installation Guide)*.

Status LEDs

The following illustration describes the LEDs for TM5SDM12DT:

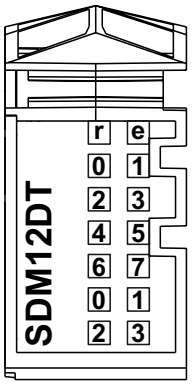

The table below shows the TM5SDM12DT input status LEDs:

LED	Color	Status	Description
r	Green	Off	No power supply
		Single flash	Reset state
		Flashing	Preoperational state
		On	Normal operation
e	Red	Off	OK or no power supply
		Single flash	Error detected on output channels [1]
e+r	Steady red / Single green flash		Invalid firmware

LED	Color	Status	Description
0 - 7	Green	Off	Corresponding input deactivated
		On	Corresponding input activated
0 - 3	Yellow	Off	Corresponding output deactivated
		On	Corresponding output activated

NOTE:

The e LED flashes when detecting one of the following errors on output channels:

- Short-circuit
- Overload
- No 24 Vdc Power Segment supply and an output is at logic 1

TM5SDM12DT Characteristics

Introduction

This is the description characteristics for the TM5SDM12DT electronic module. See also Environmental Characteristics *(see page 25)*.

⚠ DANGER

FIRE HAZARD

Use only the recommended wire sizes for the current capacity of the I/O channels and power supplies.

Failure to follow these instructions will result in death or serious injury.

⚠ WARNING

UNINTENDED EQUIPMENT OPERATION

Do not exceed any of the rated values specified in the environmental and electrical characteristics tables.

Failure to follow these instructions can result in death, serious injury, or equipment damage.

General Characteristics

The table below describes the general characteristics of the TM5SDM12DT electronic module:

General Characteristics	
Rated power supply voltage Power supply source	24 Vdc Connected to the 24 Vdc I/O power segment
Power supply range	20.4...28.8 Vdc
24 Vdc I/O segment current draw	21 mA (all inputs On)
TM5 Bus 5 Vdc current draw	42 mA
Power dissipation	1.52 W max.
Weight	25 g (0.9 oz)
ID code for firmware update	8377 dec

Input Characteristics

The table describes the input characteristics of the TM5SDM12DT electronic module:

Input Characteristics		
Number of input channels		8
Wiring type		1 wire
Rated input voltage		24 Vdc
Input voltage range		20.4...28.8 Vdc
De-rating	55...60 °C (131...140 °F)	I = 0.3 A max. by channel
Rated input current at 24 Vdc		3.75 mA
Input impedance		6.4 kΩ
OFF state		5 Vdc max.
ON state		15 Vdc min.
Input filter	Hardware	≤100 µs
	Software	Default 1 ms, can be configured between 0 and 25 ms in 0.2 ms intervals.
Isolation	Between channels and bus	See note [1]
	Between channels	Not isolated

[1] The isolation of the electronic module is 500 Vac RMS between the electronics powered by the TM5 bus and those powered by 24 Vdc I/O power segment connected to the module. In practice, the TM5 electronic module is installed in the bus base, and there is a bridge between the TM5 power bus and the 24 Vdc I/O power segment. The two power circuits reference the same functional ground (FE) through specific components designed to reduce effects of electromagnetic interference. These components are rated at 30 Vdc or 60 Vdc. This effectively reduces isolation of the entire system from the 500 Vac RMS.

Output Characteristics

The table describes the output characteristics of the TM5SDM12DT electronic module:

Output Characteristics		
Output channels		4
Wiring type		1 wire
Output current		0.5 A max. per output
Total output current		2 A max.
Output voltage		24 Vdc
Output voltage range		20.4...28.8 Vdc
De-rating		0.3 A max. by channel
Voltage drop		0.3 Vdc max. at 0.5 A rated current
Leakage current when switched off		5 µA
Turn on time		300 µs max.
Turn off time		300 µs max.
Output protection		Against short-circuit and overload, thermal protection
Short-circuit output peak current		12 A max.
Automatic rearming after short-circuit or overload		Yes, 10 ms min. depending on internal temperature
Protection against reverse polarity		Yes
Clamping voltage		Typ. 50 Vdc
Switching frequency	Resistive load	500 Hz max.
	Inductive load	See the switching inductive load characteristics *(see page 210)*.
Isolation	Between input and internal bus	See note [1]
	Between channels	Not isolated

[1] The isolation of the electronic module is 500 Vac RMS between the electronics powered by the TM5 bus and those powered by 24 Vdc I/O power segment connected to the module. In practice, the TM5 electronic module is installed in the bus base, and there is a bridge between the TM5 power bus and the 24 Vdc I/O power segment. The two power circuits reference the same functional ground (FE) through specific components designed to reduce effects of electromagnetic interference. These components are rated at 30 Vdc or 60 Vdc. This effectively reduces isolation of the entire system from the 500 Vac RMS.

Switching Inductive Loads

The curves below provide the switching inductive load characteristics for the TM5SDM12DT electronic module.

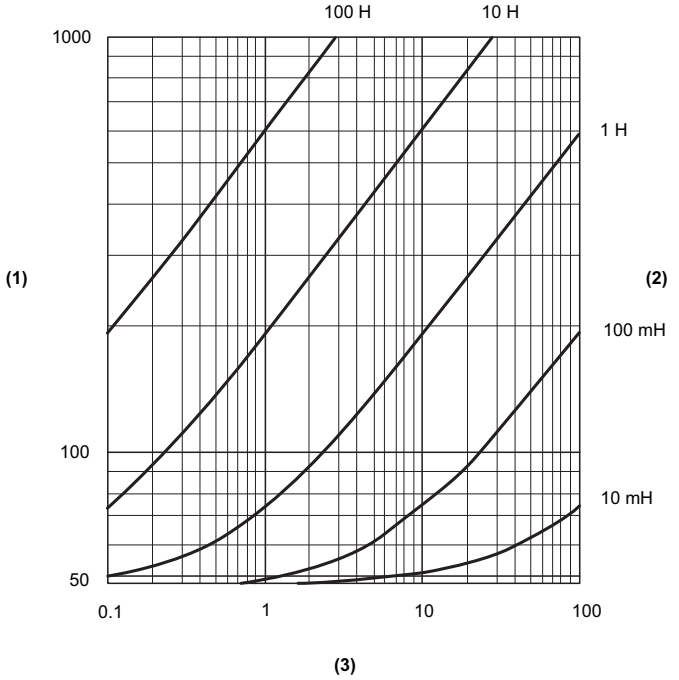

1 Load resistance in Ω
2 Load inductance
3 Max. operating cycles / second

TM5SDM12DT Wiring Diagram

Wiring Diagram

The following illustration shows the wiring diagram for the TM5SDM12DT:

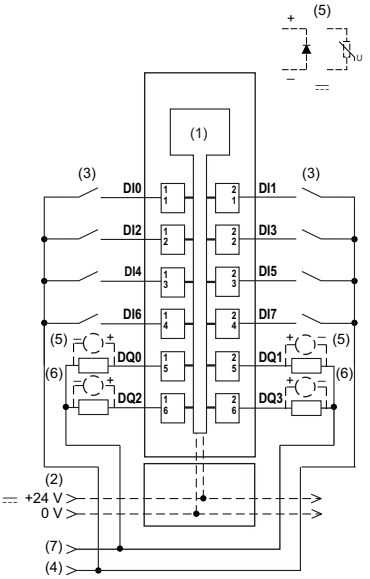

1 Internal electronics
2 24 Vdc I/O power segment integrated into the bus bases
3 2-wire sensor
4 24 Vdc I/O power segment by external connection
5 Inductive load protection
6 2-wire load
7 0 Vdc I/O power segment by external connection

NOTE: I/O electronic modules and the field devices connected to them must all reside on the same 24 Vdc I/O power segment. If not, the status LEDs may not function correctly. In addition, there may potentially be more significant consequences such as an explosion and/or fire hazard.

⚠ WARNING

POTENTIAL EXPLOSION OR FIRE

Connect the returns from the devices to the same power source as the 24 Vdc I/O power segment serving the module.

Failure to follow these instructions can result in death, serious injury, or equipment damage.

The 8-input / 4-output TM5SDM12DT electronic module can independently support 1-wire devices. To connect 2-wire devices, you can add TM5SPDD12F and TM5SPDG12F Common Distribution modules.

The following illustration shows the wiring diagram for the TM5SPDD12F, TM5SPDG12F and the TM5SDM12DT:

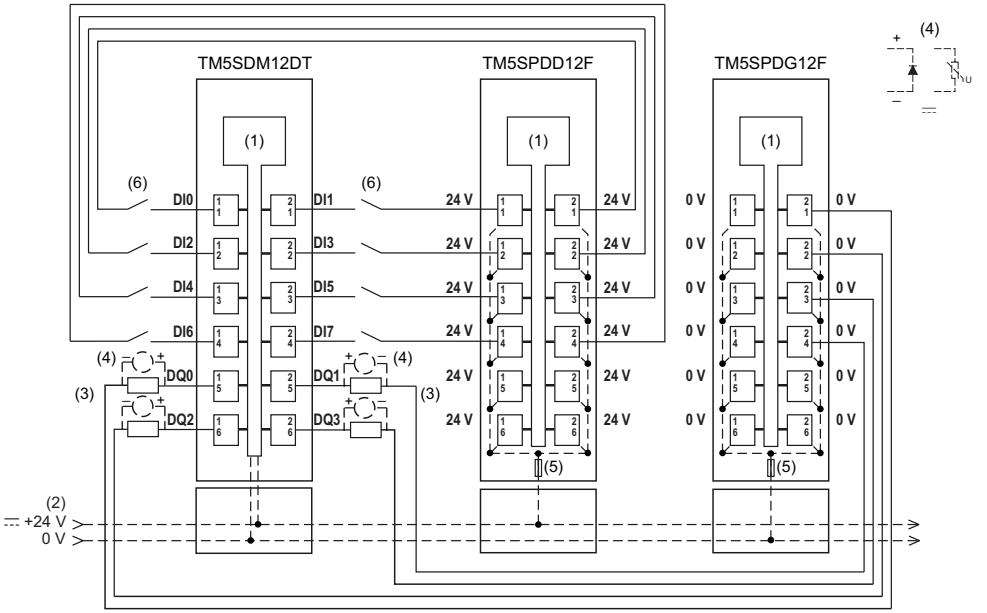

1 Internal electronics
2 24 Vdc I/O power segment integrated into the bus bases
3 2-wire load
4 Inductive load protection
5 Integrated fuse type T slow-blow 6.3 A 250 V exchangeable
6 2-wire sensor

⚠ WARNING

UNINTENDED EQUIPMENT OPERATION

Do not connect wires to unused terminals and/or terminals indicated as “No Connection (N.C.)”.

Failure to follow these instructions can result in death, serious injury, or equipment damage.

Chapter 23
TM5SMM6D2L Electronic Module 4DI/2DO 24Vdc Tr 0.5A / 1AI/1AO ±10V/0-20mA 12 Bits

What Is in This Chapter?

This chapter contains the following topics:

Topic	Page
TM5SMM6D2L Presentation	214
TM5SMM6D2L Characteristics	217
TM5SMM6D2L Wiring Diagram	223

TM5SMM6D2L Presentation

Main Characteristics

The tables describe the main characteristics of the TM5SMM6D2L electronic module:

Main Characteristics of Digital Input / Output Channels	
Number of digital input channels	4
Number of digital output channels	2
Input type	Type 1
Input signal type	Sink
Rated input voltage	24 Vdc
Output type	Transistor
Output signal type	Source
Output current	0.5 A max.

Main Characteristics of Analog Input / Output Channels		
Number of analog input channels	1	
Number of analog output channels	1	
Signal type	Voltage	Current
Input range	-10...+10 Vdc	0...20 mA / 4...20 mA
Output range	-10...+10 Vdc	0...20 mA
Resolution	12 bits + sign	12 bits

Ordering Information

The illustration shows the TM5SMM6D2L:

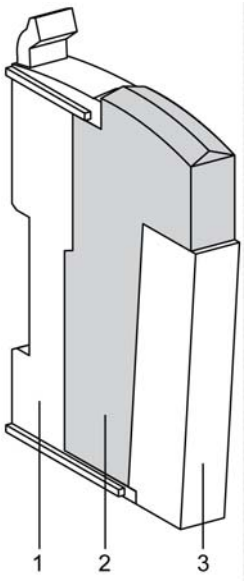

The table shows the model numbers for the terminal block and the bus bases associated with the TM5SMM6D2L:

Number	Reference	Description	Color
1	TM5ACBM11 or TM5ACBM15	Bus base Bus base with address setting	White White
2	TM5SMM6D2L	Electronic module	White
3	TM5ACTB12	Terminal block, 12 pins	White

NOTE: For more information, refer to *TM5 bus bases and terminal blocks (see Modicon TM5 / TM7 Flexible System, System Planning and Installation Guide)*.

Status LEDs

The following illustration describes the LEDs for TM5SMM6D2L:

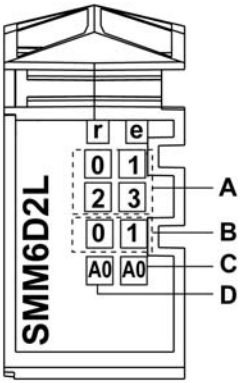

The table shows the TM5SMM6D2L input status LEDs:

Position in Illustration	LED	Color	Status	Description
–	r	Green	Off	No power supply
			Single flash	Reset state
			Flashing	Preoperational state
			On	Normal operation
–	e	Red	Off	OK or no power supply
			Single flash	Error detected on output channels
–	e+r	Steady red / Single green flash		Invalid firmware
A	0 - 3	Green	Off	Corresponding digital input deactivated
			On	Corresponding digital input activated
B	0 - 1	Orange	Off	Corresponding digital output deactivated
			On	Corresponding digital output activated
C	A0	Orange	Off	The value = 0.
			On	The value ≠ 0.
D	A0	Green	Off	The connection is open or the sensor is disconnected.
			Flashing	Overflow or underflow of the input signal
			On	The analog / digital converter is running, the value is OK.

TM5SMM6D2L Characteristics

Introduction

This is the description characteristics for the TM5SMM6D2L electronic module. See also Environmental Characteristics *(see page 25)*.

⚠ DANGER

FIRE HAZARD

Use only the recommended wire sizes for the current capacity of the I/O channels and power supplies.

Failure to follow these instructions will result in death or serious injury.

⚠ WARNING

UNINTENDED EQUIPMENT OPERATION

Do not exceed any of the rated values specified in the environmental and electrical characteristics tables.

Failure to follow these instructions can result in death, serious injury, or equipment damage.

General Characteristics

The table below describes the general characteristics of the TM5SMM6D2L electronic module:

General Characteristics	
Rated power supply voltage Power supply source	24 Vdc Connected to the 24 Vdc I/O power segment
Power supply range	20.4...28.8 Vdc
24 Vdc I/O segment current draw	73 mA (all digital inputs and outputs On)
TM5 Bus 5 Vdc current draw	2 mA
Power dissipation	1.75 W max.
Weight	25 g (0.9 oz)
ID code for firmware update	9411 dec

Input Characteristics of Digital Channels

The table describes the input characteristics of digital channels of the TM5SMM6D2L electronic module:

Input Characteristics		
Number of input channels		4
Wiring type		1 wire
Rated input voltage		24 Vdc
Input voltage range		20.4...28.8 Vdc
De-rating	Temperature: 55...60° C (131...140° F)	up to 3 inputs simultaneously activated
Rated input current at 24 Vdc		3.3 mA
Input impedance		7.18 kΩ
OFF state		5 Vdc max.
ON state		15 Vdc min.
Input filter	Hardware	≤2 µs
	Software	Default: 1 ms Can be configured between 0 and 25 ms in 0.2 ms intervals.
Isolation	Between input and internal bus	See note [1]
	Between channels	Not isolated

[1] The isolation of the electronic module is 500 Vac RMS between the electronics powered by the TM5 bus and those powered by 24 Vdc I/O power segment connected to the module. In practice, the TM5 electronic module is installed in the bus base, and there is a bridge between the TM5 power bus and the 24 Vdc I/O power segment. The two power circuits reference the same functional ground (FE) through specific components designed to reduce effects of electromagnetic interference. These components are rated at 30 Vdc or 60 Vdc. This effectively reduces isolation of the entire system from the 500 Vac RMS.

Input Characteristics of Analog Channels

The table describes the input characteristics of analog channels of the TM5SMM6D2L electronic module:

Input Characteristics	Voltage Input	Current Input
Input range	-10...+10 Vdc	0...20 mA / 4...20 mA
Input impedance	1 MΩ min.	–
Load impedance	–	300 Ω max.
Sample duration time	400 µs	
Input type	Single ended	
Conversion mode	Successive Approximative Register	
Input filter	Low pass third order / cut-off frequency 1 kHz	
Input tolerance - maximum deviation at ambient 25° C (77° F)	< 0.08% of the measurement	< 0.08% of the measurement
Input tolerance - temperature drift	0.006% / °C of the measurement	0.009% / °C of the measurement
Input tolerance - non linearity	0.02%	0.02%
Digital resolution	12 bits + sign	12 bits
Resolution value	2.441 mV	4.883 µA
Common mode rejection	DC	70 dB min.
	50 Hz	70 dB min.

Output Characteristics of Digital Channels

The table describes the output characteristics of digital channels of the TM5SMM6D2L electronic module:

Output Characteristics		
Number of Output channels		2
Wiring type		1 wire
Output current		0.5 A max. per output
Total output current		1 A max.
Output voltage		24 Vdc
Output voltage range		20.4...28.8 Vdc
De-rating	Temperature: 55...60° C (131...140° F)	I=0.4 A max. by channel
Voltage drop		0.2 Vdc max. at 0.5 A rated current
Leakage current when switched off		5 µA
Turn on time		250 µs max.
Turn off time		250 µs max.
Output protection		Against short-circuit and overload, thermal protection
Short-circuit output peak current		14 A max.
Automatic rearming after short-circuit or overload		Yes, 10 ms min. depending on internal temperature
Protection against reverse polarity		Yes
Clamping voltage		Typ. 50 Vdc
Switching frequency	Resistive load	100 Hz
	Inductive load	See the switching inductive load characteristics *(see page 222)*.
Isolation	Between input and internal bus	See note [1]
	Between channels	Not isolated

[1] The isolation of the electronic module is 500 Vac RMS between the electronics powered by the TM5 bus and those powered by 24 Vdc I/O power segment connected to the module. In practice, the TM5 electronic module is installed in the bus base, and there is a bridge between the TM5 power bus and the 24 Vdc I/O power segment. The two power circuits reference the same functional ground (FE) through specific components designed to reduce effects of electromagnetic interference. These components are rated at 30 Vdc or 60 Vdc. This effectively reduces isolation of the entire system from the 500 Vac RMS.

Output Characteristics of Analog Channels

The table describes the output characteristics of analog channels of the TM5SMM6D2L electronic module:

Output Characteristics	Voltage Output	Current Output
Output range	-10...+10 Vdc	0...20 mA
Output impedance	1 kΩ min. (0...55° C (32...131° F)), 10 kΩ min. (55...60° C (131...140° F))	–
Load impedance	–	400 Ω max. (0...55° C (32...131° F)), >300 Ω max. (55...60° C (131...140° F))
Conversion time	300 µs	
Response time for output change	1 ms max.	
Output tolerance - maximum deviation at ambient 25° C (77° F)	< 0.15% of the measurement	
Output tolerance - temperature drift	0.02% / ° C of the measurement	
Output tolerance - non linearity	< 0.1% of the measurement	
Output tolerance - maximum deviation caused by load change	0.02% from 10 MΩ to 1 kΩ, resistive	0.5% from 1 Ω to 500 Ω, resistive
Digital resolution	12 bits + sign	12 bits
Resolution value	2.441 mV	4.882 µA
Noise resistance - cable	Shielded cable is necessary	
Isolation between channels	Not isolated	
Isolation between channels and bus	See note [1]	
Output protection	Short-circuit protection: current limitation is 50 mA	

[1] The isolation of the electronic module is 500 Vac RMS between the electronics powered by the TM5 bus and those powered by 24 Vdc I/O power segment connected to the module. In practice, the TM5 electronic module is installed in the bus base, and there is a bridge between the TM5 power bus and the 24 Vdc I/O power segment. The two power circuits reference the same functional ground (FE) through specific components designed to reduce effects of electromagnetic interference. These components are rated at 30 Vdc or 60 Vdc. This effectively reduces isolation of the entire system from the 500 Vac RMS.

Switching Inductive Loads

The curves provide the switching inductive load characteristics for the TM5SMM6D2L electronic module.

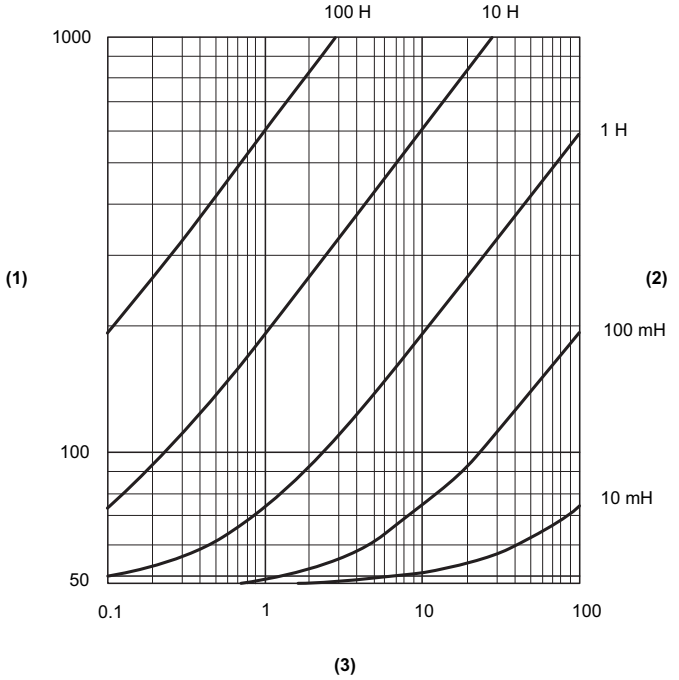

1 Load resistance in Ω
2 Load inductance
3 Max. operating cycles / second

TM5SMM6D2L Wiring Diagram

Wiring Diagram

The following illustration shows the wiring diagram for TM5SMM6D2L:

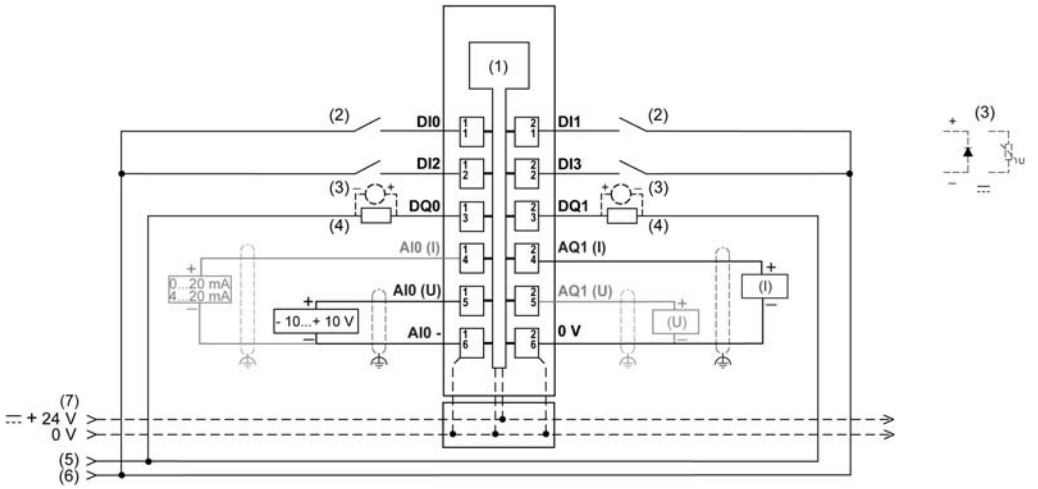

1 internal electronics
2 2-wire sensor
3 inductive load protection
4 2-wire load
5 0 Vdc I/O power segment by external connection
6 24 Vdc I/O power segment integrated into the bus bases
7 24 Vdc I/O power segment integrated into the bus bases
I current
U voltage

⚠ WARNING
UNINTENDED EQUIPMENT OPERATION Do not connect wires to unused terminals and/or terminals indicated as “No Connection (N.C.)”. **Failure to follow these instructions can result in death, serious injury, or equipment damage.**

Specific Information for Digital Inputs

NOTE: I/O electronic modules and the field devices connected to them must all reside on the same 24 Vdc I/O power segment. If not, the status LEDs may not function correctly. In addition, there may potentially be more significant consequences such as an explosion and/or fire hazard.

⚠ WARNING

POTENTIAL EXPLOSION OR FIRE

Connect the returns from the devices to the same power source as the 24 Vdc I/O power segment serving the module.

Failure to follow these instructions can result in death, serious injury, or equipment damage.

The 4-digital input TM5SMM6D2L electronic module can independently support 1-wire devices. To connect 2-wire devices, you can add a TM5SPDD12F Common Distribution module.

Specific Information for Analog Inputs

Use shielded, properly grounded cables for all analog and high-speed inputs or outputs and communication connections. If you do not use shielded cable for these connections, electromagnetic interference can cause signal degradation. Degraded signals can cause the controller or attached modules and equipment to perform in an unintended manner.

⚠ WARNING

UNINTENDED EQUIPMENT OPERATION

- Use shielded cables for all fast I/O, analog I/O and communication signals.
- Ground cable shields for all analog I/O, fast I/O and communication signals at a single point[1].
- Route communication and I/O cables separately from power cables.

Failure to follow these instructions can result in death, serious injury, or equipment damage.

[1]Multipoint grounding is permissible if connections are made to an equipotential ground plane dimensioned to help avoid cable shield damage in the event of power system short-circuit currents.

For example, If you have physically wired the analog channel for a voltage signal and you configure the channel for a current signal in SoMachine, you may damage the analog circuit.

NOTICE
INOPERABLE EQUIPMENT Verify that the physical wiring of the analog circuit is compatible with the software configuration for the analog channel. **Failure to follow these instructions can result in equipment damage.**

Specific Information for Digital Outputs

NOTE: I/O electronic modules and the field devices connected to them must all reside on the same 24 Vdc I/O power segment. If not, the status LEDs may not function correctly. In addition, there may potentially be more significant consequences such as an explosion and/or fire hazard.

⚠ WARNING
POTENTIAL EXPLOSION OR FIRE Connect the returns from the devices to the same power source as the 24 Vdc I/O power segment serving the module. **Failure to follow these instructions can result in death, serious injury, or equipment damage.**

The 2-digital output TM5SMM6D2L electronic module can independently support 1-wire devices. To connect 2-wire devices, you can add a TM5SPDG12F Common Distribution module.

Specific Information for Analog Output

Use shielded, properly grounded cables for all analog and high-speed inputs or outputs and communication connections. If you do not use shielded cable for these connections, electromagnetic interference can cause signal degradation. Degraded signals can cause the controller or attached modules and equipment to perform in an unintended manner.

⚠ WARNING

UNINTENDED EQUIPMENT OPERATION

- Use shielded cables for all fast I/O, analog I/O and communication signals.
- Ground cable shields for all analog I/O, fast I/O and communication signals at a single point[1].
- Route communication and I/O cables separately from power cables.

Failure to follow these instructions can result in death, serious injury, or equipment damage.

[1]Multipoint grounding is permissible if connections are made to an equipotential ground plane dimensioned to help avoid cable shield damage in the event of power system short-circuit currents.

For example, If you have physically wired the analog channel for a voltage signal and you configure the channel for a current signal in SoMachine, you may damage the analog circuit.

NOTICE

INOPERABLE EQUIPMENT

Verify that the physical wiring of the analog circuit is compatible with the software configuration for the analog channel.

Failure to follow these instructions can result in equipment damage.

Glossary

0-9

%

According to the IEC standard, % is a prefix that identifies internal memory addresses in the logic controller to store the value of program variables, constants, I/O, and so on.

A

analog input

Converts received voltage or current levels into numerical values. You can store and process these values within the logic controller.

analog output

Converts numerical values within the logic controller and sends out proportional voltage or current levels.

B

bus base

A mounting device that is designed to seat an electronic module on a DIN rail and connect it to the TM5 bus for M258 and LMC058 logic controllers. Each base bus extends the integrated TM5 data and electronic power buses as well as the 24 Vdc I/O power segment. The electronic modules are added to the TM5 system through their insertion on the base bus.

C

CAN

(*controller area network*) A protocol (ISO 11898) for serial bus networks, designed for the interconnection of smart devices (from multiple manufacturers) in smart systems and for real-time industrial applications. Originally developed for use in automobiles, CAN is now used in a variety of industrial automation control environments.

CANopen

An open industry-standard communication protocol and device profile specification (EN 50325-4).

configuration

The arrangement and interconnection of hardware components within a system and the hardware and software parameters that determine the operating characteristics of the system.

controller

Automates industrial processes (also known as programmable logic controller or programmable controller).

CSA

(*Canadian standards association*) The Canadian standard for industrial electronic equipment in hazardous environments.

D

derating

A reduction in an operating specification. For devices in general, it is usually a specified reduction in nominal power to facilitate operation at increased ambient conditions like higher temperatures or higher altitudes.

DIN

(*Deutsches Institut für Normung*) A German institution that sets engineering and dimensional standards.

E

electronic module

In a programmable controller system, most electronic modules directly interface to the sensors, actuators, and external devices of the machine/process. This electronic module is the component that mounts in a bus base and provides electrical connections between the controller and the field devices. Electronic modules are offered in a variety of signal levels and capacities. (Some electronic modules are not I/O interfaces, including power distribution modules and transmitter/receiver modules.)

element

The short name of the ARRAY element.

EN

EN identifies 1 of many European standards maintained by CEN (*European Committee for Standardization*), CENELEC (*European Committee for Electrotechnical Standardization*), or ETSI (*European Telecommunications Standards Institute*).

encoder

A device for length or angular measurement (linear or rotary encoders).

equipment

A part of a machine including sub-assemblies such as conveyors, turntables, and so on.

Ethernet

A physical and data link layer technology for LANs, also known as IEE 802.3.

F

FAST I/O

FAST input/output Specific I/O modules with some electrical features (for example, response time) while the treatment of these channels are done directly by the controller

firmware

Represents the BIOS, data parameters, and programming instructions that constitute the operating system on a controller. The firmware is stored in non-volatile memory within the controller.

function

A programming unit that has 1 input and returns 1 immediate result. However, unlike FBs, it is directly called with its name (as opposed to through an instance), has no persistent state from one call to the next and can be used as an operand in other programming expressions.

Examples: boolean (AND) operators, calculations, conversions (BYTE_TO_INT)

H

hot swapping

The replacement of a component with a like component while the system remains under power and operational. The replacement component begins to function automatically after it is installed.

I

I/O

(*input/output*)

ID

(*identifier/identification*)

IEC

(*international electrotechnical commission*) A non-profit and non-governmental international standards organization that prepares and publishes international standards for electrical, electronic, and related technologies.

input filter

A special function that helps reject extraneous signals on input lines due to such things as contact bounce and inducted electrical transients. Inputs provide a level of input filtering using the hardware. Additional filtering with software is also configurable through the programing or the configuration software.

IP 20

(*ingress protection*) The protection classification according to IEC 60529 offered by an enclosure, shown by the letter IP and 2 digits. The first digit indicates 2 factors: helping protect persons and for equipment. The second digit indicates helping protect against water. IP 20 devices help protect against electric contact of objects larger than 12.5 mm, but not against water.

L

LED

(*light emitting diode*) An indicator that illuminates under a low-level electrical charge.

M

machine

Consists of several *functions* and/or *equipment*.

ms

(*millisecond*)

N

network

A system of interconnected devices that share a common data path and protocol for communications.

P

PCI

(*peripheral component interconnect*) An industry-standard bus for attaching peripherals.

PDM

(*power distribution module*) A module that distributes either AC or DC field power to a cluster of I/O modules.

T

terminal block

(*terminal block*) The component that mounts in an electronic module and provides electrical connections between the controller and the field devices.

U

UL

(*underwriters laboratories*) A US organization for product testing and safety certification.

Index

E

Electronic modules
- documentation references, *28*
- installation, *28*

environmental characteristics, *25*

G

General characteristics
- TM5SDI2DF, *80*

H

hot swapping, *29*

I

installation and Maintenance
- installation and Maintenance requirements, *16*

P

Presentation
- TM5SDO12T, *158*
- TM5SDO16T, *168*
- TM5SDO2R, *178*
- TM5SDO2S, *194*
- TM5SDO2T, *110*
- TM5SDO4R, *186*
- TM5SDO4T, *120*
- TM5SDO4TA, *130*
- TM5SDO6T, *140*
- TM5SDO8TA, *148*

T

TM5 digital
- TM5SDI12D, *61*
- TM5SDI16D, *69*
- TM5SDI2A, *85*
- TM5SDI2D, *41*
- TM5SDI4A, *93*
- TM5SDI4D, *47*
- TM5SDI6D, *53*
- TM5SDI6U, *101*
- TM5SDM12DT, *203*
- TM5SDO12T, *157*
- TM5SDO16T, *167*
- TM5SDO2R, *177*
- TM5SDO2S, *193*
- TM5SDO2T, *109*
- TM5SDO4R, *185*
- TM5SDO4T, *119*
- TM5SDO4TA, *129*
- TM5SDO6T, *139*
- TM5SDO8TA, *147*
- TM5SMM6D2L, *213*

TM5 expert
- TM5SDI2DF, *77*

TM5SDI12D, *61*
TM5SDI16D, *69*
TM5SDI2A, *85*
TM5SDI2D, *41*
TM5SDI2DF, *77*
TM5SDI4A, *93*
TM5SDI4D, *47*
TM5SDI6D, *53*
TM5SDI6U, *101*
TM5SDM12DT, *203*
TM5SDO12T, *157*
TM5SDO16T, *167*
TM5SDO2R, *177*
TM5SDO2S, *193*
TM5SDO2T, *109*
TM5SDO4R, *185*
TM5SDO4T, *119*

TM5SDO4TA, *129*
TM5SDO6T, *139*
TM5SDO8TA, *147*
TM5SMM6D2L, *213*

W

Wiring Diagram
  TM5SDM12DT, *211*
  TM5SDO12T, *164*
  TM5SDO16T, *174*
  TM5SDO2DS, *198*
  TM5SDO2R, *183*
  TM5SDO2T, *116*
  TM5SDO4R, *191*
  TM5SDO4T, *126*
  TM5SDO4TA, *136*
  TM5SDO6T, *146*
  TM5SDO8TA, *155*
  TM5SMM6D2L, *223*
wiring rules, *19*