Modicon™ M340™ automation platform
Single-rack configuration

Introduction

BMXXBP●●00 racks are the basic element in Modicon™ M340™ single-rack and multi-rack configurations. They perform the following functions:

■ Mechanical function: they are used to install the modules in a PAC station (power supply, processor, discrete, analog and application-specific I/O). These racks can be mounted on a panel, plate or DIN rail:
- □ Inside enclosures
- □ On machine frames

■ Electrical function: the racks incorporate a Bus X (proprietary bus). They are used to:
- □ Distribute the power supplies required for each module in the same rack
- □ Distribute data and service signals for the entire PAC station
- □ Hot swap modules during operation

Description

BMXXBP●●00 racks are available in 4, 6, 8 or 12-slot versions and feature:

1 Metal frame that performs the following functions:
- Holds the Bus X electronic card and helps to protect it against EMI and ESD type interference
- Holds the modules
- Gives the rack mechanical rigidity

2 Earth ground terminal for grounding the rack
3 4 holes (big enough for M6 screws) for mounting the rack on a frame
4 2 mounting points for the shielding connection bar
5 Tapped holes to take the locking screw on each module
6 Connector for a rack expansion module, marked **XBE**
7 40-way female ½ DIN connectors forming the electrical connection between the rack and each module, marked **CPS**, **00** to **11** (The rack is delivered with each connector covered. The cover is removed before inserting the module)
8 Slots for anchoring the module pins

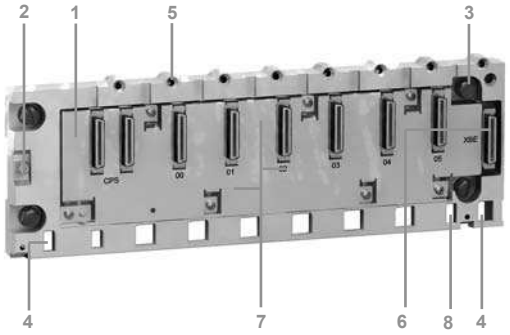

BMXXBP0600 rack with 6 slots

To be ordered separately:

A **BMXXSP●●00** cable shielding connection kit, used to help protect against electrostatic discharge when connecting the shielding on cordsets for connecting:
- □ Analog, counter and motion control modules
- □ A Magelis™ XBT operator interface to the processor (via **BMXXCAUSBH0●●** shielded USB cable)

The **BMXXSP●●00** shielding connection kit is comprised of:

9 Metal bar that takes the clamping rings and the grounding terminal
10 Two sub-bases to be mounted on the rack
11 Earth grounding terminal
12 Not included in the shielding connection kit, the **STBXSP30●0** clamping rings (sold in lots of 10, cross-section 1.5 to 6 mm² or 5 to 11 mm²)

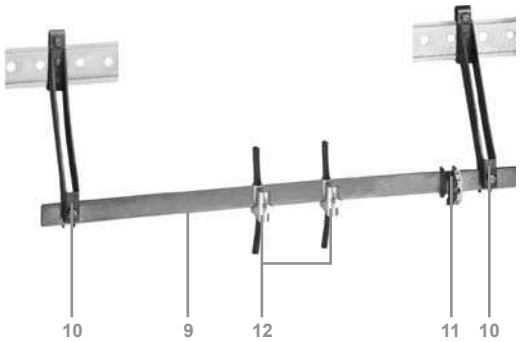

BMXXSP●●00 cable shielding connection kit

Function

Addressing modules in a single-rack configuration *(1)*

Each rack requires a power supply module and a processor module.

Installing the modules in the rack:
- □ The power supply module occupies the **CPS** slot
- □ The processor module is installed in slot **00**
- □ I/O modules and application-specific modules are installed from slot **01** to slot:
  - **03** for a 4-slot rack
  - **05** for a 6-slot rack
  - **07** for an 8-slot rack
  - **11** for a 12-slot rack

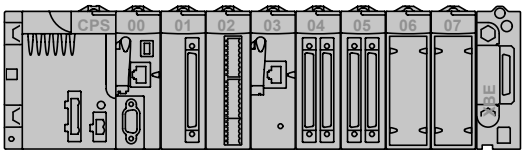

Example of installation with 8-slot rack

(1) For a multi-rack configuration with a BMXXBE1000 rack expansion module (XBE slot), see page 1/12.

Modicon™ M340™ automation platform

Single-rack configuration

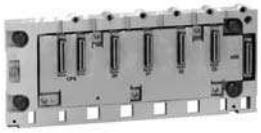

BMXXBP0400

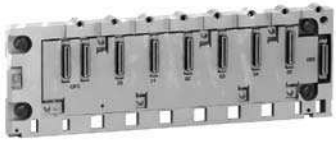

BMXXBP0600

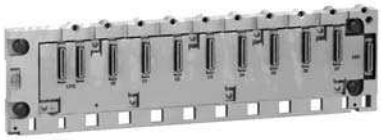

BMXXBP0800

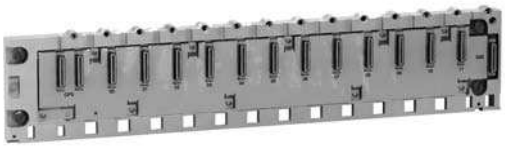

BMXXBP1200

Racks

Description	Type of module to be inserted	No. of slots *(1)*	Reference	Weight kg
Racks	BMXCPS power supply, BMXP34processor, I/O modules, communication modules and application-specific modules (counter, motion control and serial)	4	**BMXXBP0400**	0.630
		6	**BMXXBP0600**	0.790
		8	**BMXXBP0800**	0.950
		12	**BMXXBP1200**	1.270

(1) Number of slots taking the processor module, I/O modules, communication modules and application-specific modules (excluding power supply module).



STBXSP●●00 + STBXP30●0

Accessories

Description	For use with	Reference	Weight kg
Shielding connection kits is comprised of: - 1 metal bar - 2 support sub-bases - 1 grounding terminal	BMXXBP0400 rack	**BMXXSP0400**	0.280
	BMXXBP0600 rack	**BMXXSP0600**	0.310
	BMXXBP0800 rack	**BMXXSP0800**	0.340
	BMXXBP1200 rack	**BMXXSP1200**	0.400
Spring clamping rings Sold in lots of 10	Cables, cross-section 1.5 to 6 mm²	**STBXSP3010**	0.050
	Cables, cross-section 5 to 11 mm²	**STBXSP3020**	0.070
Protective covers (replacement parts) Sold in lots of 5	Unoccupied slots on BMXXBP●●00 rack	**BMXXEM010**	0.005

I/O: pages 2/2 and 2/14 | Communication: page 3/2 | Software: page 4/2 | Ruggedized Modicon M340 modules: page 6/2