Variable speed drives

Altivar 71 and Altivar 71 Plus

for three-phase motors from 0.37 to 630 kW

Catalogue

September 2011

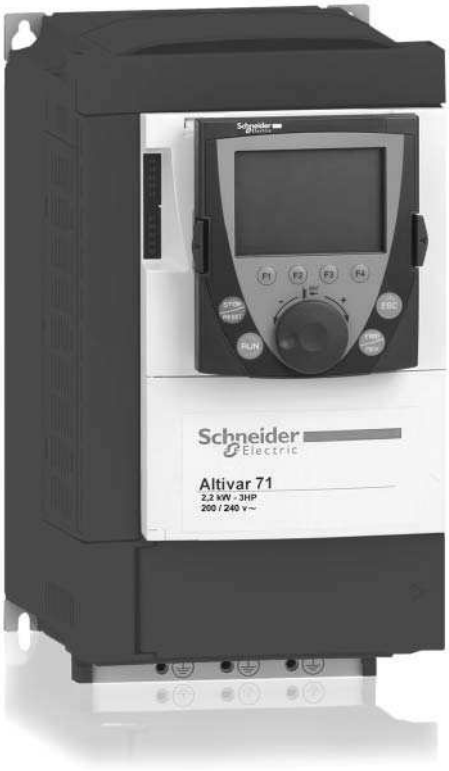

Schneider Electric

All technical information about products listed in this catalogue are now available on:

www.schneider-electric.com

+

Browse the “product data sheet” to check out :

- characteristics,
- dimensions,
- curves, ...
- and also the links to the user guides and the CAD files.

1 From the home page, type the model number* into the “Search” box.



* type the model number without any blank, replace “●” by “*”

2 Under ”All” tab, click the model number that interests you.

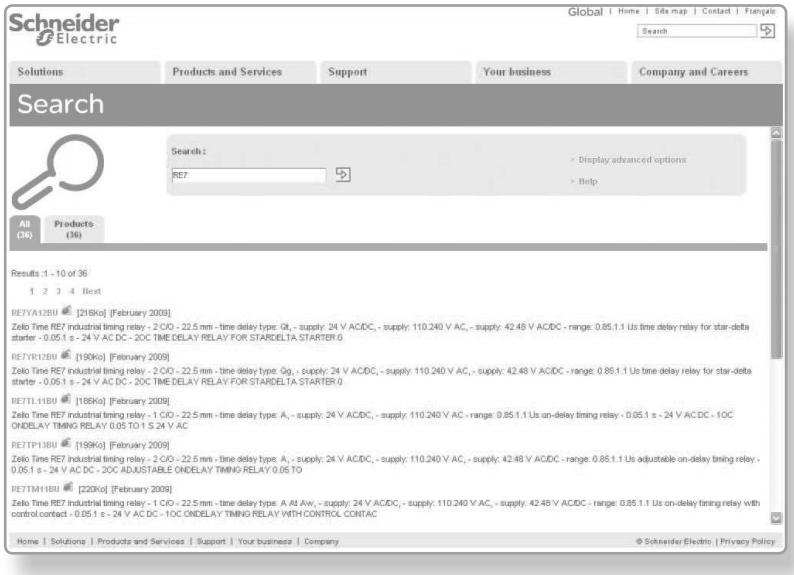

3 The product data sheet displays.

Example : Zelio Time data sheet

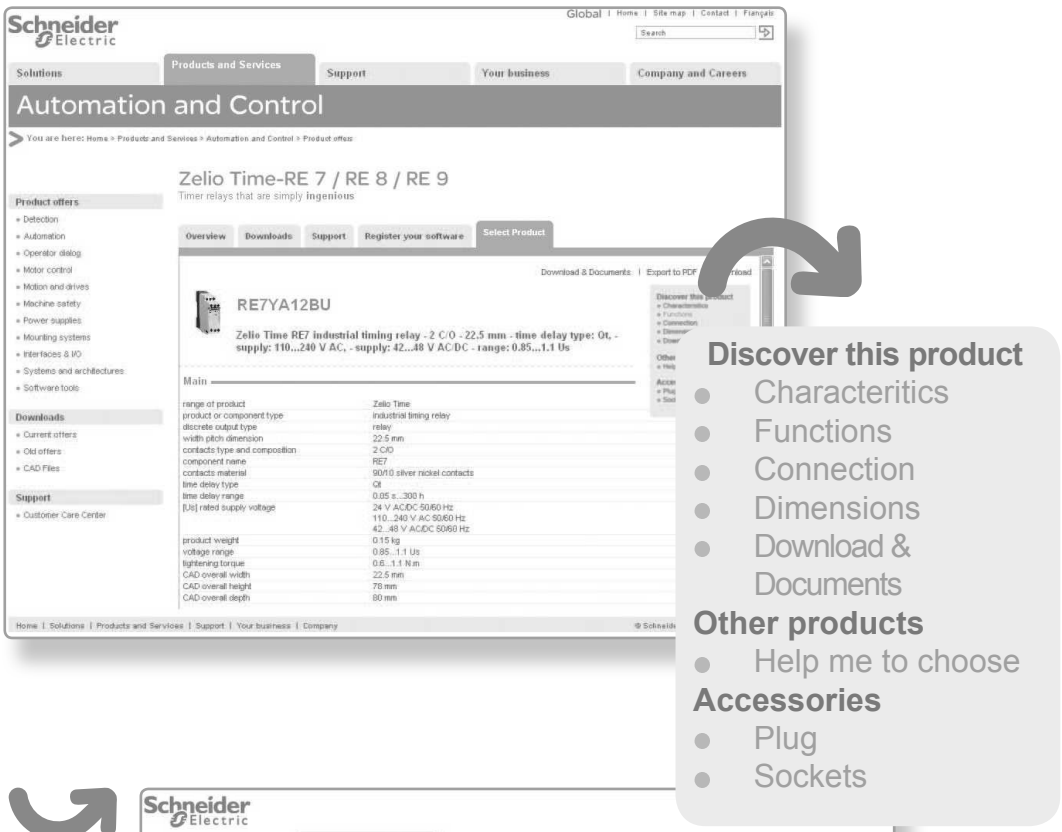

Example : Zelio Time data sheet



Example : Zelio Time data sheet

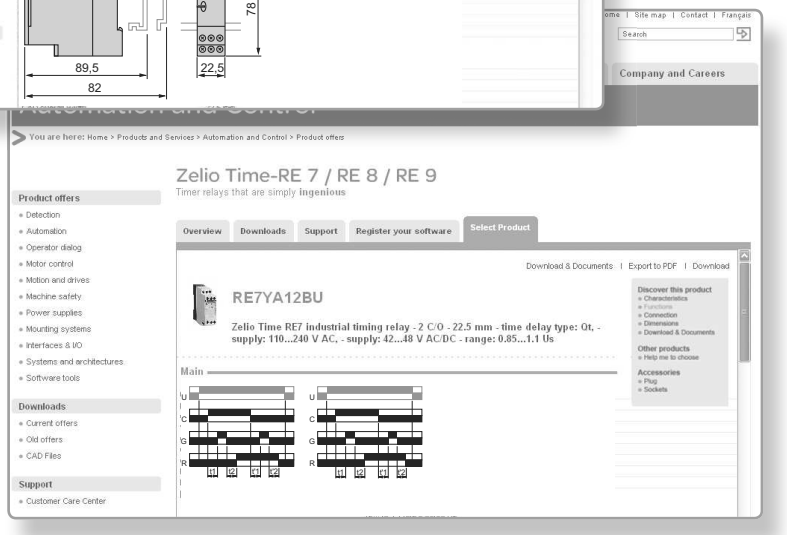

☑ You can get this information in one single pdf file.

Contents

Altivar 71 and Altivar 71 Plus variable speed drives

IP 20 variable speed drive selection guide. . . . . page 4

IP 54 or IP 55 variable speed drive selection guide . . . . . page 6

Altivar 71 Plus variable speed drive selection guide . . . . . page 8

■ **Presentation** . . . . . *page 10*

■ **Altivar 71 variable speed drives**

□ 200…240 V power supply, IP 20. . . . . *page 16*
□ 380…480 V power supply:
- IP 20. . . . . *page 17*
- IP 20, on base plate . . . . . *page 18*
- IP 20, water-cooled . . . . . *page 18*
- IP 54. . . . . *page 19*
- IP 54, with Vario switch disconnector . . . . . *page 19*

□ 500…600 V power supply, IP 20. . . . . *page 20*
□ 500…690 V power supply:
- IP 20. . . . . *page 20*
- IP 20, water-cooled . . . . . *page 21*

□ Variants . . . . . *page 22*
□ Accessories . . . . . *page 23*
□ Dialogue and configuration tools . . . . . *page 32*
□ SoMove setup software . . . . . *page 36*

■ **Drive/option combinations** . . . . . *page 40*

■ **Options**

□ Encoder interface cards . . . . . *page 52*
□ I/O extension cards . . . . . *page 53*
□ Controller inside programmable card . . . . . *page 54*
□ Communication buses and networks . . . . . *page 58*
□ Resistance braking units . . . . . *page 64*
□ Braking resistors . . . . . *page 65*
□ Hoist resistors . . . . . *page 68*
□ Network braking units. . . . . *page 70*
□ Active Front End. . . . . *page 72*
□ Reduction of current harmonics:
- DC chokes . . . . . *page 76*
- line chokes . . . . . *page 78*
- passive filters . . . . . *page 81*

□ Additional EMC input filters . . . . . *page 84*
□ Output filters:
- motor chokes . . . . . *page 86*
- sinus filters . . . . . *page 90*

■ **Motor starters. . . . . *page 92***

■ **Altivar 71 Plus variable speed drives**

□ Pre-equipped IP 54 floor-standing enclosure kit. . . . . *page 102*
□ “Ready to use” IP 54 floor-standing enclosure . . . . . *page 104*
□ IP 23 or IP 54 enclosure with separate air flows . . . . . *page 106*
□ IP 23 or IP 54 enclosure compact version. . . . . *page 110*
□ Options . . . . . *page 114*

■ **Index of references . . . . . *page 124***

IP 20 or IP 21 variable speed drives for asynchronous and synchronous motors

Type of machine			Simple machines		Pumps and fans (building (HVAC)) *(1)*
					
Power range for 50…60 Hz (kW) line supply			**0.18…4**	**0.18…15**	**0.75…75**
	Single-phase 100…120 V (kW)		0.18…0.75	–	–
	Single-phase 200…240 V (kW)		0.18…2.2	0.18…2.2	–
	Three-phase 200…230 V (kW)		–	–	–
	Three-phase 200…240 V (kW)		0.18…4	0.18…15	0.75…30
	Three-phase 380…480 V (kW)		–	–	0.75…75
	Three-phase 380…500 V (kW)		–	0.37…15	–
	Three-phase 500…600 V (kW)		–	–	–
	Three-phase 525…600 V (kW)		–	0.75…15	–
	Three-phase 500…690 V (kW)		–	–	–
Degree of protection			IP 20	IP 21	
Type of cooling			Heatsink		
Drive	Output frequency		0.1…400 Hz	0.1…500 Hz	0.5…200 Hz
	Type of control	Asynchronous motor	Standard (voltage/frequency) Performance (sensorless flux vector control) Pump/fan (Kn^2 quadratic ratio)	Standard (voltage/frequency) Performance (sensorless flux vector control) Energy saving ratio	Sensorless flux vector control Voltage/frequency ratio (2 points) Energy saving ratio
		Synchronous motor	–		
	Transient overtorque		150…170% of the nominal motor torque	170…200% of the nominal motor torque	120% of the nominal motor torque
Functions					
Number of functions			40	50	50
Number of preset speeds			8	16	7
Number of I/O	Analog inputs		1	3	2
	Logic inputs		4	6	3
	Analog outputs		1	1	1
	Logic outputs		1	–	–
	Relay outputs		1	2	2
Communication	Integrated		Modbus	Modbus and CANopen	Modbus, METASYS N2, APOGEE FLN, BACnet
	Available as an option		–	CANopen Daisy Chain, DeviceNet, PROFIBUS DP, Modbus TCP, Fipio	LonWorks
Cards (available as an option)			–		
Dialogue tools			IP 54 or IP 65 remote terminal	IP 54 or IP 65 remote terminal IP 54 remote graphic display terminal	IP 54 or IP 65 remote graphic display terminal
Configuration tools	Setup software		SoMove		PCSoft for ATV 212
	Configuration tools		Simple Loader, Multi-Loader		Multi-Loader
Standards and certifications			IEC 61800-5-1 IEC 61800-3 (environments 1 and 2, categories C1 to C3, cat. C1 with option for ATV 212)		
			CE, UL, CSA, C-Tick, NOM, GOST	CE, UL, CSA, DNV, C-Tick, NOM, GOST	EN 55011: Group 1, class A and class B with option card. CE, UL, CSA, C-Tick, NOM
References			**ATV 12**	**ATV 312**	**ATV 212**
Catalogues			"Altivar 12 variable speed drives"	"Altivar 312 variable speed drives"	"Altivar 212 variable speed drives"

(1) Heating, Ventilation and Air Conditioning

Pumps and fans (industrial)	**Complex machines**
	  
0.37…800	**0.37…630**
–	–
0.37…5.5	0.37…5.5
–	–
0.75…90	0.37…75
0.75…630	0.75…500
–	–
2.2…7.5	1.5…7.5
–	–
2.2…800	1.5…630
IP 20	
Heatsink or water-cooled system	Heatsink, base plate or water-cooled system
0.1…500 Hz for the entire range 0.1…599 Hz up to 37 kW at 200…240 V ∼ and 380…480 V ∼	0.1…500 Hz for the entire range 0.1…599 Hz up to 37 kW at 200…240 V ∼ and 380…480 V ∼
Sensorless flux vector control Voltage/frequency ratio (2 or 5 points) Energy saving ratio	Flux vector control with or without sensor Voltage/frequency ratio (2 or 5 points) ENA System
Vector control without speed feedback	Vector control with or without speed feedback
120% of the nominal motor torque for 60 seconds	220% of the nominal motor torque for 2 seconds 170% for 60 seconds
> 100	> 150
8	16
2…4	2…4
6…20	6…20
1…3	1…3
0…8	0…8
2…4	2…4
Modbus and CANopen	
Modbus TCP Daisy Chain, Modbus/Uni-Telway, EtherNet/IP, DeviceNet, PROFIBUS DP V0 and V1, InterBus, CC-Link, LonWorks, METASYS N2, APOGEE FLN, BACnet	Modbus TCP Daisy Chain, Modbus/Uni-Telway, EtherNet/IP, DeviceNet, PROFIBUS DP V0 and V1, InterBus, CC-Link
I/O extension cards, “Controller Inside” programmable card, multi-pump cards, encoder interface cards	Interface cards for incremental, resolver, SinCos, SinCos Hiperface®, EnDat® or SSI encoders, I/O extension cards, Controller Inside programmable card
IP 54 or IP 65 remote graphic display terminal	
SoMove	
Simple Loader, Multi-Loader	
IEC 61800-5-1 IEC 61800-3 (environments 1 and 2, categories C1 to C3), IEC 61000-4-2/4-3/4-4/4-5/4-6/4-11 CE, UL, CSA, DNV, C-Tick, NOM, GOST	
ATV 61	**ATV 71**
“Altivar 61 variable speed drives”	Page 16

IP 54 or IP 55 variable speed drives for asynchronous and synchronous motors

Type of machine			Simple machines	Pumps and fans (building (HVAC)) *(1)*
				
Power range for 50…60 Hz (kW) line supply			**0.18…15**	**0.75…75**
	Single-phase 200…240 V (kW)		0.18…2.2	–
	Three-phase 380…480 V (kW)		–	0.75…75
	Three-phase 380…500 V (kW)		0.37…15	–
Degree of protection			IP 55	IP 55
Variants			Enclosure user-definable up to 4 kW: Vario switch disconnector, LEDs, selector switch, potentiometer	–
Drive	Output frequency		0.1…500 Hz	0.1…200 Hz
	Type of control	Asynchronous motor	Sensorless flux vector control Voltage/frequency ratio	Sensorless flux vector control Voltage/frequency ratio (2 points) Energy saving ratio
		Synchronous motor	–	–
	Transient overtorque		170…200% of the nominal motor torque	120% of the nominal motor torque for 60 seconds
Functions				
Number of functions			50	50
Number of preset speeds			16	7
Number of I/O	Analog inputs		3	2
	Logic inputs		6	3
	Analog outputs		1	1
	Logic outputs		–	–
	Relay outputs		2	2
Communication	Integrated		Modbus and CANopen	Modbus, METASYS N2, APOGEE FLN, BACnet
	Available as an option		Modbus TCP, Fipio, PROFIBUS DP, DeviceNet	LonWorks
Cards (available as an option)			–	–
Dialogue tools			IP 65 remote terminal	IP 54 or IP 65 remote graphic display terminal
Configuration tools	Setup software		SoMove	PCSoft for ATV 212 drive
	Configuration tool		Simple Loader	Multi-Loader
Standards and certifications			IEC 61800-5-1, IEC 61800-3 (environments 1 and 2, categories C1 to C3) CE, UL, CSA, C-Tick, GOST	
References			**ATV 31C**	**ATV 212W**
Catalogues			"Altivar 31C variable speed drives"	"Altivar 212 variable speed drives"

(1) Heating, Ventilation and Air Conditioning

Pumps and fans (industrial)		Complex machines	
			
0.75…90		**0.75…75**	
–			
0.75…90		0.75…75	
–			
IP 54			
–	Equipped with a Vario switch disconnector	–	Equipped with a Vario switch disconnector
0.1…599 Hz from 0.75 to 45 kW 0.1…500 Hz from 55…90 kW		0.1…599 Hz from 0.75 to 37 kW 0.1…500 Hz from 45 to 75 kW	
Sensorless flux vector control Voltage/frequency ratio (2 or 5 points) Energy saving ratio		Sensorless flux vector control Voltage/frequency ratio (2 or 5 points) ENA System	
Vector control without speed feedback		Vector control with or without speed feedback	
110% of the nominal motor torque for 60 seconds		220% of the nominal motor torque for 2 seconds 170% for 60 seconds	
>100		>150	
8		16	
2…4		2…4	
6…20		6…20	
1…3		1…3	
0…8		0…8	
2…4		2…4	
Modbus and CANopen			
Modbus TCP Daisy Chain, Modbus/Uni-Telway, EtherNet/IP, DeviceNet, PROFIBUS DP V0 and V1, InterBus, CC-Link, LonWorks, METASYS N2, APOGEE FLN, BACnet		Modbus TCP Daisy Chain, Modbus/Uni-Telway, EtherNet/IP, DeviceNet, PROFIBUS DP V0 and V1, InterBus, CC-Link	
I/O extension cards, “Controller Inside” programmable card, multi-pump cards, encoder interface cards		Interface cards for incremental, resolver, SinCos, SinCos Hiperface®, EnDat® or SSI encoders, I/O extension cards, Controller Inside programmable card	
IP 54 or IP 65 remote graphic display terminal			
SoMove			
Simple Loader, Multi-Loader			
IEC 61800-5-1, IEC 61800-3 (environments 1 and 2, categories C1 to C3), IEC 61000-4-2/4-3/4-4/4-5/4-6/4-11 CE, UL, CSA, DNV, C-Tick, NOM, GOST			
ATV 61W	**ATV 61E5**	**ATV 71W**	**ATV 71E5**
“Altivar 61 variable speed drives”		Page 19	

Variable speed drives
Altivar 61 Plus and Altivar 71 Plus
Integrated solutions

Type of machine			**Pumps and fans** (industrial)		
					
Power range for 50…60 Hz (kW) line supply			**90…630**	**90…800**	**630…2400**
	Three-phase 380…415 V		90...630	90...630	630...1400
	Three-phase 500 V		–	90...630	630...1800
	Three-phase 690 V		–	110...800	800...2400
Main characteristics			With enhanced protection		With enhanced protection and integrated cooling circuit
Variants			Ready to use	Standard offer Modular with integrated options User-definable on request	
Drive	Output frequency		0.1...500 Hz		
	Type of control	Asynchronous motor	Sensorless flux vector control Voltage/frequency ratio 2 or 5 points Energy saving ratio		
		Synchronous motor	Flux vector control without speed feedback		
	Transient overtorque		120% of the nominal motor torque for 60 seconds		
Communication	Embedded		Modbus and CANopen		
	As an option		Modbus TCP, Modbus/Uni-Telway, EtherNet/IP, DeviceNet, PROFIBUS DP V0 and V1, InterBus, CC-Link LonWorks, METASYS N2, APOGEE FLN, BACnet		
Cards (available as an option)			"Controller Inside" programmable card Multi-pump cards		
Degree of protection			IP 54 with separate air flows, **ATV 61ES5**	IP 23 compact version, **ATV 61EXC2** IP 54 compact version, **ATV 61EXC5** IP 54 with separate air flows, **ATV 61EXS5**	With integrated air-cooled circuit: IP 23: **ATV 61EXA2** IP 54: **ATV 61EXA5** With external water-cooled system: IP 55, on request
References			**ATV 61 Plus**		
Catalogues			"Altivar 61 variable speed drives"		

Complex machines
(industrial and infrastructure)





90…500	**90…630**	**500…2000**
90…500	90…500	500…1300
–	90…500	500…1500
–	110…630	630…2000
With enhanced protection		With enhanced protection and integrated cooling circuit
Ready to use	Standard offer Modular with integrated options User-definable on request	
0.1…500 Hz		
Flux vector control with or without sensor Voltage/frequency ratio (2 or 5 points) ENA System		
Vector control with or without speed feedback		
220% of the nominal motor torque for 2 seconds 170% of the nominal motor torque for 60 seconds		
Modbus and CANopen		
Modbus TCP, Modbus/Uni-Telway, EtherNet/IP, DeviceNet, PROFIBUS DP V0 and V1, InterBus, CC-Link		
“Controller Inside” programmable card		
IP 54 with separate air flows, **ATV 71ES5**	IP 23 compact version, **ATV 71EXC2** IP 54 compact version, **ATV 71EXC5** IP 54 with separate air flows, **ATV 71EXS5**	IP 23, with integrated air-cooled circuit, **ATV 71EXA2** IP 54, with integrated air-cooled circuit, **ATV 71EXA5** IP 55, with external water-cooled system (on request)

ATV 71 Plus

Page 102

Variable speed drives
Altivar 71

100529



Hoisting application

104209



Packaging application

102163



Wood-working machine application

Applications

With its different types of motor control and numerous integrated functions, the Altivar 71 range of variable speed drives meets the most stringent requirements.

It is suitable for the most demanding drive systems:
- Torque and speed accuracy at very low speed, high dynamic performance with Flux Vector Control with or without sensor
- Extended frequency range for high-speed motors
- Parallel connection of motors and special drives using the voltage/frequency ratio
- Static speed accuracy and energy saving for open-loop synchronous motors
- Smooth flexibility for unbalanced machines with the ENA (ENergy Adaptation) System.

In conjunction with the wide voltage range for a 690 V ∼ line supply, the Altivar 71 drive's advanced functions boost performance levels and make machines more versatile so they can be used for a large number of applications.

Hoisting
- Brake control adapted for translational, hoisting and slewing movements
- Load measurement using weight sensor
- High-speed hoisting
- Brake feedback management
- Limit switch management
- Slack sling

Handling
- Very quick response times on transmission of a command: 2 ms (± 0.5 ms)
- Reference via pulse train or differential analog input
- Control via the principal communication networks
- Position control via limit switches with time optimization at low speed
- Multiple parameter settings via parameter set switching

Packaging
- Up to 50 Hz of the bandwidth
- Very quick response times on change of reference: 2 ms (± 0.5 ms)
- Control via integrated CANopen machine bus
- Position control via limit switches

Textile machines
- High resolution of the digital speed reference (1/32,000)
- Speed accuracy assured by use of synchronous motor, irrespective of load
- High bandwidth
- Spooling function
- Connection to common DC bus
- Control of both asynchronous and synchronous motors supported
- High-performance speed loop

Wood-working machines
- Operation up to 1600 Hz
- Fastest possible controlled stop on loss of line supply
- Control via integrated CANopen machine bus
- Protection of motor against overvoltages

Process machinery
- PID regulator
- High-resolution references
- Speed or torque control
- Connection to the principal communication networks
- Separate control section power supply
- Braking unit via re-injection to the line supply
- Connection to common DC bus

Variable speed drives: pages 16 to 21 | Variants: page 22 | Accessories: pages 23 to 31 | Options: page 52 | Drive/option combinations: page 40

Variable speed drives
Altivar 71



An extensive range with a wide selection of options

An extensive and versatile offer

The Altivar 71 range of variable speed drives covers a wide range of motor power ratings from 0.37 kW to 630 kW with five types of power supply:
- 200…240 V single-phase, 0.37 kW to 5.5 kW, IP 20 (**ATV 71H●●●M3**)
- 200…240 V three-phase, 0.37 kW to 75 kW, IP 20 (**ATV 71H●●●M3** and **ATV 71H●●●M3X**)
- 380…480 V three-phase, 0.75 kW to 500 kW, IP 20 (**ATV 71H●●●N4**)
- 500…600 V three-phase, 1.5 kW to 7.5 kW, IP 20 (**ATV 71H●●●S6X**)
- 500…690 V three-phase, 1.5 kW to 630 kW, IP 20 (**ATV 71H●●●Y**)

This range can be used for controlling asynchronous motors in sensor/sensorless flux vector control mode.
At 200…240 V ∿ and 380…480 V ∿, there is a special version available that can be used for controlling synchronous motors with sinusoidal electromotive force when there is speed feedback. Control of asynchronous motors is still supported (see pages 22 and 52). All the options supported by the Altivar 71 range of variable speed drives are also available with this version when an identical rating is used.

The Altivar 71 drive integrates the Modbus and CANopen protocols as standard, as well as numerous functions. These functions can be extended using communication option cards (see page 58), I/O extension cards, an encoder interface or a Controller Inside programmable card (see pages 52 to 57).

External options such as braking resistors, resistance braking units, chokes and filters complete the offer (see page 15).

Eco-friendly and energy-saving

The Altivar 71 drive has been designed to generate significant energy savings in industrial processes, by offering options that can reduce line interference (DC chokes, line chokes, passive filters, Active Front End (AFE), etc.).
It has been designed as an eco-friendly product (using 90% recyclable materials, compliant with environmental standard ISO 14040). It is RoHS-compliant.

Compliance with international standards and certifications

The entire range conforms to international standards IEC/EN 61800-5-1, IEC/EN 61800-2, IEC/EN 61800-3, is UL, CSA, DNV, C-Tick, NOM 117 and GOST certified, and has been developed to meet the requirements of directives regarding the protection of the environment (RoHS, WEEE, etc.) as well as those of European Directives (CE mark).

Functional safety and ATEX applications

The Altivar 71 drive features a Power Removal safety function that is designed to ensure motor stopping and prevent accidental restarts. This safety function means that the drive can be installed as part of the safety system for an Electrical/Electronic/Programmable Electronic control system relating to the safety of a machine or industrial process.
It meets the requirements of category 3 of the ISO 1384 machine safety standard, SIL 2 of IEC/EN 61508 and standard IEC/EN 61800-5-2 which covers the functional safety requirements of power drive products.

The Power Removal safety function also enables the Altivar 71 drive to offer protection for motors installed in explosive atmospheres (ATEX certification). Please refer to the ATEX guide which is available on our website www.schneider-electric.com.

Electromagnetic compatibility

Reducing current harmonics and observing requirements in respect of electromagnetic compatibility were considered right from the design stage.
The incorporation of EMC filters in **ATV 71H●●●M3**, **ATV 71●●●●N4**, **ATV 71●●●●Y** and **ATV 71P●●●N4Z** drives and the recognition of EMC requirements facilitates installation and provides an economical means of ensuring machines receive the CE mark.

ATV 71H●●●M3X and **ATV 71H●●●S6X** drives have been designed without an EMC filter. Filters are available as an option and can be installed by the customer to reduce the level of emissions (see page 84).

107473



ATV 71W075N4

PF524498



Kit VW3 A9 544

PF536936



ATV 71EXC2●●●N4

107481



ATV 71PU40N4Z

Appropriate solutions for each environment

The IP 20 Altivar 71 range of variable speed drives includes numerous different versions. It can therefore offer solutions in a wide variety of fields and in very harsh environments. It is designed to adapt perfectly to your needs with ready-to-use or modular solutions.

Versions with IP 54 degree of protection for difficult environments

To meet the requirements of applications in difficult environments (dusty, humid, etc.), drives can be supplied on their own or inside a floor-standing enclosure:

■ A drive version with IP 54 degree of protection (see page 19):
□ at 380…480 V ∿, 0.75 kW to 75 kW (**ATV 71W●●●N4**)

■ A drive version with IP 54 degree of protection featuring a Vario switch disconnector (see page 19):
□ at 380…480 V ∿, 0.75 kW to 75 kW (**ATV 71E5●●●N4**)

■ A drive version ready-assembled in an IP 54 floor-standing enclosure (see pages 104 and 105). The offer covers motor power ratings from 90 kW to 630 kW (**ATV 71EXS5●●●N4, ATV 71EXS5●●●N** and **ATV 71EXS5●●●Y**).

■ A drive version ready-assembled in an IP 23 or IP 54 floor-standing enclosure (see pages 106 to 109). The offer covers motor power ratings from 500 kW to 2000 kW (**ATV 71EXA●●●●●**).

The **ATV 71EXS5●●●●●** and **ATV 71EXA●●●●●** products have been designed for easy setup in highly polluted environments and, in particular, to ensure optimum enclosure ventilation by keeping the control and power air circuits separate. They include a standard version and a modular version.

■ A preassembled kit for creating an IP 54-certified floor-standing enclosure (see pages 102 and 103).
This straightforward and cost-effective solution, which is available by quoting a single reference, provides you with all the mechanical components you need to create an IP 54 floor-standing enclosure (**VW3 A9 541**…**VW3 A9 551**).
This product has been designed for compatibility with IP 20 Altivar 71 drives, 90 kW to 500 kW at 380…480 V ∿ (**ATV 71HD90N4…HC50N4**). It includes a standard version and a modular version.

Water-cooled versions for environments requiring greater ruggedness

With their internal water-cooled system, Altivar 71Q (**ATV 71Q●●●N4** and **ATV 71Q●●●Y**) drives represent the optimum solution for applications in which rugged versions are essential. The integrated water-cooled system circuit can dissipate heat at its source and hence offers optimum integration of the whole electrical control system.
85% of drive thermal losses are evacuated by this system, which also avoids the need to install an expensive air conditioning system.
The Altivar 71Q offer is also perfectly suited to frequent start-up applications.
See pages 18 and 21.

Version for industrial environments and infrastructures

The following product is available to facilitate setup in industrial environments and infrastructure contexts (tunnels, treatment plants, etc.):
■ A drive version ready-assembled in an IP 23 or IP 54 compact floor-standing enclosure which covers motor power ratings from 90 kW to 630 kW (**ATV 71EXC●●●●●**). It is available in a standard version or modular version.
See pages 110 to 113.

Version for environments where no ventilation is permitted

The following product is available to meet the requirements of applications where the necessary degree of protection rules out the possibility of ventilation:
■ A drive on base plate version providing IP 20 degree of protection:
□ at 380…480 V ∿, 0.75 to 11 kW (**ATV 71P●●●N4Z**) (see page 18)

As the drive is not equipped with a fan as standard, a DC choke (see page 76) must be added in order to prevent overheating during operation.

DF536808

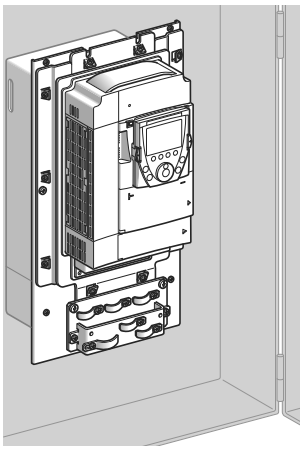

ATV 71HU75N4 flush-mounted

DF536809

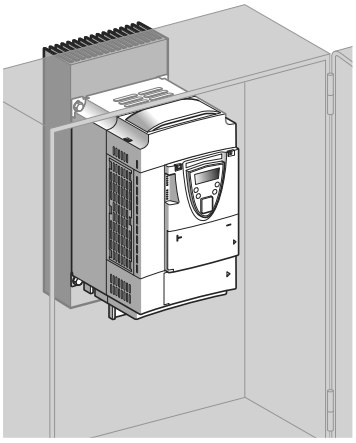

ATV 71PU75N4Z in dust and damp proof enclosure

Mounting options

The Altivar 71 drive can be mounted in a variety of ways for integration in various devices.

Mounting outside enclosure

The standard version of the Altivar 71 (on heatsink) or the base plate version can be mounted directly on a wall without having to be installed inside an enclosure.
UL Type 1 conformity can be achieved using kit **VW3 A9 2●●**, or IP 21 or IP 31 conformity with kit **VW3 A9 1●●** (see pages 28 and 29).

Flush-mounting in dust and damp proof enclosure

The Altivar 71 drive has been designed to optimize the size of enclosures (floor-standing, wall-mounted, etc.).
This type of flush-mounting can be used to reduce the size of enclosure required and to limit the temperature rise inside the enclosure:

- The power section, with IP 54 degree of protection, can be easily mounted outside the enclosure using kit **VW3 A9 5●●** for flush-mounting in a dust and damp proof enclosure (see page 26).

This type of mounting can lead to ambient temperatures of up to 60°C inside the enclosure without derating.
It may be necessary to use a control card fan kit **VW3 A9 4●●** appropriate for the drive rating in order to avoid hot spots (see page 25).

If the installation conditions require it, this version also allows side-by-side mounting (please consult our website www.schneider-electric.com).

Mounting in a dust and damp proof enclosure or on machine frame

The Altivar 71 drive on base plate supports two mounting options:

- In a dust and damp proof enclosure using kit **VW3 A9 80●** for dust and damp proof mounting (see page 27) which has been designed to dissipate heat via a heatsink mounted outside the enclosure
- On a machine frame, where the frame's earth allows the heat to be dissipated

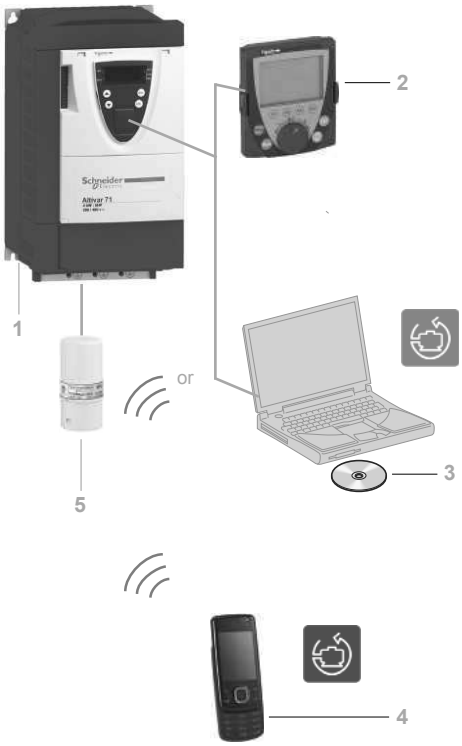

Application-specific dialogue and configuration tools

Remote graphic display terminal

The Altivar 71 drive 1, except for the version on a base plate ATV71P●●●N4Z, is supplied with a remote graphic display terminal 2.
It is extremely user-friendly, offering quick and easy access to the drop-down menus and the most complex functions, online help screens, six languages installed as standard and others available via flash memory. Four configuration files can be stored.
It is customizable for the customer or the machine.
It can be mounted remotely on an enclosure door with IP 54 or IP 65 degree of protection on IP 20 drives, or built-in on IP 54 drives.
The most complex functions are easily accessible thanks to advanced functions on the display unit.

Up to 15 kW at 200…240 V ∿ and 75 kW at 380…480 V ∿, the Altivar 71 drive can be ordered without a remote graphic display terminal; it is then only equipped with the integrated terminal.

SoMove setup software 3

SoMove setup software for PC is used to configure, adjust and debug the Altivar 71 drive with the Oscilloscope function and also for maintenance of this drive, as for all other Schneider Electric drives and starters. See page 160.

SoMove Mobile software 4

SoMove Mobile software is particularly suitable for maintenance operations. It can be used to edit the drive parameters from a mobile phone, save the configurations, import them from a PC or export them to a PC via a Bluetooth wireless connection 5. See page 160.

Simple Loader and Multi-Loader programming tools

The Simple Loader tool enables one powered-up drive's configuration to be duplicated on another powered-up drive.
The Multi-Loader tool enables a number of configurations from a PC or drive to be copied and duplicated on another drive; the Altivar 71 drives do not need to be powered up. See page 161.

Quick programming tools

Macro-configuration
The Altivar 71 drive offers quick and easy programming using macro-configurations corresponding to different applications or uses: start-stop, handling, hoisting, general use, connection to communication networks, PID regulator, master/slave applications (for synchronous motors with speed feedback).
Each of these configurations is still fully modifiable.
Simply Start menu
The Simply start menu can be used to ensure that the application is working correctly, maximize motor performance and ensure motor protection.

The architecture, the hierarchical parameter structure and the direct access functions all serve to make programming quick and easy, even for the more complex functions.

536803

RUN	Term	+50.00Hz	5.4A
1.1 SIMPLY START			
Cde 2 fils/3 fils	:		**Cde 2 fils**
Macro-configuration	:		Manutention
Standard fréq. mot	:		50Hz IEC
Puissance nom. mot	:		2.2kW
Tension nom. mot	:		400V
Code	<<	>>	Quick

Quick programming with the Simply Start menu

536804

SCF1	Term	+50.00Hz	0.0A
HISTORIQUE DEFAUTS			
Court-circuit mot.			
Surintensité			
Déf. Externe LI			
Surtension réseau			
Soustension			
Help			Quick

Built-in function:
Error log

536805

SCF1	Term	+50.00Hz	0.0A
COURT-CIRCUIT MOTEUR			
Vérifier les câbles de liaison			
et l'isolement du moteur.			
Effectuer un test de diagnostic			
			Quick

Built-in function:
Troubleshooting screen

Built-in maintenance, monitoring and diagnostic functions

The Altivar 71 has numerous built-in maintenance, monitoring and diagnostic functions:
Examples of functions:
- Built-in drive test functions with diagnostic screen on the remote graphic display terminal
- I/O maps
- Communication maps for the different ports
- Oscilloscope function that can be viewed using the SoMove setup software
- Management of the drive installed base via microprocessors with flash memory
- Remote use of these functions by connecting the drive to a modem via the Modbus port
- Identification of all the drive's component parts as well as the software versions
- Error logs with display of the value of up to 16 variables on occurrence of a fault
- Display terminal languages loaded in the flash memory
- A message of up to 5 lines of 24 characters can be stored in the drive

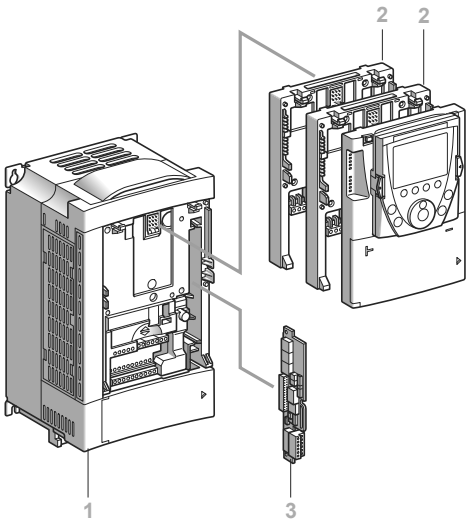

A wide range of options

The numerous options designed for the Altivar 71 drive make it highly flexible and extremely easy to adapt to applications.

Option cards

The Altivar 71 drive 1 can integrate up to three different option cards simultaneously, including:

- Two of the following cards:
  - I/O extension cards 2 (see page 53)
  - Communication cards 2 (Modbus TCP Daisy Chain, Modbus/Uni-Telway, EtherNet/IP, DeviceNet, PROFIBUS DP, etc.) (see page 58)
  - Controller Inside programmable card 2 to adapt the variable speed drive to specific applications (see page 54)
- One of the following encoder interface cards 3: with RS 422-compatible differential outputs; with open collector outputs (NPN); with push-pull outputs; resolver; with SinCos, SinCos Hiperface®, EnDat®, or SSI universal outputs; with RS 422-compatible differential outputs plus encoder emulation (RS 422 ESIM) (see page 52)

Other options

Numerous other external options can be combined with the Altivar 71:

- Braking units and resistors (standard or hoist-specific) (see pages 64 to 69)
- Network braking units (see pages 70 to 71)
- Active Front End (AFE) to use the drive to return energy to the line supply or when the installation requires particularly low harmonic levels; in addition it operates on unstable line supplies (see pages 72 to 75)
- DC chokes, line chokes and passive filters to reduce harmonic currents (see pages 76 to 83)
- Additional EMC input filters to reduce conducted emissions on the line (see pages 84 and 85)
- Motor chokes and sinus filters for long cable runs or to remove the need for shielding (see pages 86 to 91)

***Note:** Please refer to the compatibility summary tables to determine which options are available for individual drives (see pages 40 to 51).*

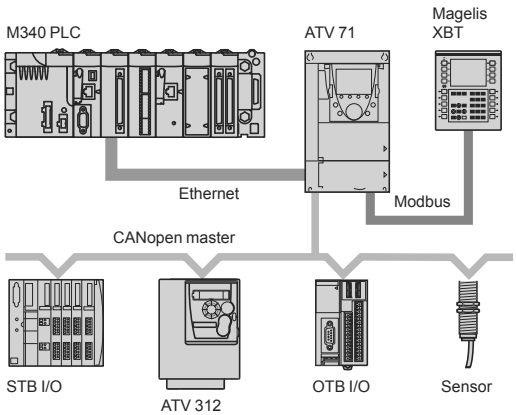

Integration into PLC architectures

The Altivar 71 drive has a built-in combined Modbus or CANopen port for quick, accurate motion control, adjustment, supervision and configuration. A second port is available for connecting a Magelis terminal for machine dialogue.

The Altivar 71 drive can be integrated into most networked industrial applications using the communication option cards.
The following protocols are available:
Modbus TCP Daisy Chain, Modbus/Uni-Telway, EtherNet/IP, DeviceNet, PROFIBUS DP V0 and V1, INTERBUS and CC-LINK (see pages 58 to 63).

The option of powering the control section separately enables communication (monitoring, diagnostics) to be maintained even if there is no power supply to the control section.

The Controller Inside programmable card transforms the drive into an automation island. This is used to adapt the drive to specific applications quickly and progressively, by decentralizing the control system functions (pages 54 to 57):

- The card has its own I/O; it can also manage those of the drive and an I/O extension card.
- It contains onboard application programs developed in IEC/EN 61131-3 languages, which reduce the control system response time.
- Its CANopen master port enables control of other drives and dialogue with I/O modules and sensors.

Variable speed drives
Altivar 71
Supply voltage: 200...240 V 50/60 Hz
IP 20 drives

107472



ATV 71HU22M3Z

101001



ATV 71H037M3

101010



ATV 71HD37M3X

IP 20 drives

Motor		Line supply				Altivar 71				
Power indicated on rating plate *(1)*		Line current *(2)*		Apparent power	Max. prospective line Isc	Maximum continuous current *(1)*	Max. transient current for		Reference *(3)*	Weight
		200 V	240 V	240 V		230 V	60 s	2 s		
kW	*HP*	A	A	kVA	kA	A	A	A		kg
Single-phase supply voltage: 200…240 V 50/60 Hz										
0.37	*0.5*	6.9	5.8	1.4	5	3	4.5	4.9	**ATV 71H075M3**	3.000
0.75	*1*	12	9.9	2.4	5	4.8	7.2	7.9	**ATV 71HU15M3**	3.000
1.5	*2*	18.2	15.7	3.7	5	8	12	13.2	**ATV 71HU22M3**	4.000
2.2	*3*	25.9	22.1	5.3	5	11	16.5	18.1	**ATV 71HU30M3**	4.000
3	–	25.9	22	5.3	5	13.7	20.6	22.6	**ATV 71HU40M3** *(4)*	4.000
4	*5*	34.9	29.9	7	5	17.5	26.3	28.8	**ATV 71HU55M3** *(4)*	5.500
5.5	*7.5*	47.3	40.1	9.5	22	27.5	41.3	45.3	**ATV 71HU75M3** *(4)*	7.000
Three-phase supply voltage: 200…240 V 50/60 Hz										
0.37	*0.5*	3.5	3.1	1.3	5	3	4.5	4.9	**ATV 71H037M3**	3.000
0.75	*1*	6.1	5.3	2.2	5	4.8	7.2	7.9	**ATV 71H075M3**	3.000
1.5	*2*	11.3	9.6	4	5	8	12	13.2	**ATV 71HU15M3**	3.000
2.2	*3*	15	12.8	5.3	5	11	16.5	18.1	**ATV 71HU22M3**	4.000
3	–	19.3	16.4	6.8	5	13.7	20.6	22.6	**ATV 71HU30M3**	4.000
4	*5*	25.8	22.9	9.5	5	17.5	26.3	28.8	**ATV 71HU40M3**	4.000
5.5	*7.5*	35	30.8	12.8	22	27.5	41.3	45.3	**ATV 71HU55M3**	5.500
7.5	*10*	45	39.4	16.4	22	33	49.5	54.5	**ATV 71HU75M3**	7.000
11	*15*	53.3	45.8	19	22	54	81	89.1	**ATV 71HD11M3X** *(5)*	22.000
15	*20*	71.7	61.6	25.6	22	66	99	109	**ATV 71HD15M3X** *(5)*	22.000
18.5	*25*	77	69	28.7	22	75	112	124	**ATV 71HD18M3X** *(5)*	30.000
22	*30*	88	80	33.3	22	88	132	145	**ATV 71HD22M3X** *(5)*	30.000
30	*40*	124	110	45.7	22	120	180	198	**ATV 71HD30M3X** *(5)*	37.000
37	*50*	141	127	52.8	22	144	216	238	**ATV 71HD37M3X** *(5)*	37.000
45	*60*	167	147	61.1	22	176	264	290	**ATV 71HD45M3X** *(5)*	37.000
55	*75*	200	173	71.9	35	221	332	365	**ATV 71HD55M3X** *(5) (6)*	100.000
75	*100*	271	232	96.4	35	285	428	470	**ATV 71HD75M3X** *(5) (6)*	122.000

Dimensions (overall)

Drives	W x H x D mm
ATV 71H037M3…HU15M3	130 x 230 x 175
ATV 71HU22M3…HU40M3	155 x 260 x 187
ATV 71HU55M3	175 x 295 x 187
ATV 71HU75M3	210 x 295 x 213
ATV 71HD11M3X, HD15M3X	230 x 400 x 213
ATV 71HD18M3X, HD22M3X	240 x 420 x 236
ATV 71HD30M3X…HD45M3X	320 x 550 x 266
ATV 71HD55M3X	320 x 920 x 377
ATV 71HD75M3X	360 x 1022 x 377

(1) These values are given for a nominal switching frequency of 4 kHz up to ATV 71HD15M3X or 2.5 kHz for ATV 71HD18M3X… HD75M3X drives for use in continuous operation.
The switching frequency is adjustable from 1…16 kHz up to ATV 71HD45M3X and from 1…8 kHz for ATV 71HD55M3X and ATV 71HD75M3X drives. Above 2.5 or 4 kHz, depending on the rating, the drive will reduce the switching frequency automatically in the event of an excessive temperature rise. For continuous operation above the nominal switching frequency, derate the nominal drive current (see derating curves on our website www.schneider-electric.com).
(2) Typical value for the indicated motor power and for the maximum prospective line Isc.
(3) Variants available (see page 22).
(4) A line choke must be used (see page 78).
(5) Drive supplied without EMC filter. EMC filters are available as an option (see page 84).
(6) Drive supplied without EMC mounting plate. It is included in the UL Type 1 or IP 31 conformity kit, which must be ordered separately (see pages 28 and 29).

***Note:** Consult the summary tables of possible drive, option and accessory combinations (see page 40).*

Variable speed drives

Altivar 71

Supply voltage: 380...480 V 50/60 Hz
IP 20 drives

107464



ATV 71HU22N4

107478



ATV 71HU40N4Z

101016



ATV 71HC28N4

IP 20 drives

Motor		Line supply				Altivar 71					
Power indicated on rating plate *(1)*		Line current *(2)*		Apparent power	Max. prospective line Isc	Maximum continuous current *(1)*		Max. transient current for		Reference *(3)*	Weight
		380 V	480 V	380 V		380 V (IEC)	460 V (NEC)	60 s	2 s		
kW	*HP*	A	A	kVA	kA	A	A	A	A		kg
Three-phase supply voltage: 380…480 V 50/60 Hz											
0.75	*1*	3.7	3	2.4	5	2.3	2.1	3.5	3.8	**ATV 71H075N4**	3.000
1.5	*2*	5.8	5.3	3.8	5	4.1	3.4	6.2	6.8	**ATV 71HU15N4**	3.000
2.2	*3*	8.2	7.1	5.4	5	5.8	4.8	8.7	9.6	**ATV 71HU22N4**	3.000
3	–	10.7	9	7	5	7.8	6.2	11.7	12.9	**ATV 71HU30N4**	4.000
4	*5*	14.1	11.5	9.3	5	10.5	7.6	15.8	17.3	**ATV 71HU40N4**	4.000
5.5	*7.5*	20.3	17	13.4	22	14.3	11	21.5	23.6	**ATV 71HU55N4**	5.500
7.5	*10*	27	22.2	17.8	22	17.6	14	26.4	29	**ATV 71HU75N4**	5.500
11	*15*	36.6	30	24.1	22	27.7	21	41.6	45.7	**ATV 71HD11N4**	7.000
15	*20*	48	39	31.6	22	33	27	49.5	54.5	**ATV 71HD15N4**	22.000
18.5	*25*	45.5	37.5	29.9	22	41	34	61.5	67.7	**ATV 71HD18N4**	22.000
22	*30*	50	42	32.9	22	48	40	72	79.2	**ATV 71HD22N4**	30.000
30	*40*	66	56	43.4	22	66	52	99	109	**ATV 71HD30N4**	37.000
37	*50*	84	69	55.3	22	79	65	118.5	130	**ATV 71HD37N4**	37.000
45	*60*	104	85	68.5	22	94	77	141	155	**ATV 71HD45N4**	44.000
55	*75*	120	101	79	22	116	96	174	191	**ATV 71HD55N4**	44.000
75	*100*	167	137	109.9	22	160	124	240	264	**ATV 71HD75N4**	44.000
90	*125*	166	134	109.3	35	179	179	269	295	**ATV 71HD90N4** *(4)*	100.000
110	*150*	202	163	133	35	215	215	323	355	**ATV 71HC11N4** *(4)*	122.000
132	*200*	239	192	157.3	35	259	259	388	427	**ATV 71HC13N4** *(4)*	116.000
160	*250*	289	233	190.2	50	314	314	471	518	**ATV 71HC16N4** *(4)*	163.000
200	*300*	357	286	235	50	387	387	580	638	**ATV 71HC20N4** *(4)*	207.000
220	*350*	396	320	260.6	50	427	427	640	704	**ATV 71HC25N4** *(4)*	207.000
250	*400*	444	357	292.2	50	481	481	721	793		
280	*450*	494	396	325.1	50	550	550	825	907	**ATV 71HC28N4** *(4)*	207.000
315	*500*	555	444	365.3	50	616	616	924	1016	**ATV 71HC31N4** *(4)*	320.000
355	–	637	512	419.3	50	671	671	1006	1107	**ATV 71HC40N4** *(4)*	330.000
400	*600*	709	568	466.6	50	759	759	1138	1252		
500	*700*	876	699	576.6	50	941	941	1411	1552	**ATV 71HC50N4** *(4)*	435.000

Dimensions (overall)

Drives	W x H x D mm
ATV 71H075N4…HU22N4	130 x 230 x 175
ATV 71HU30N4, HU40N4	155 x 260 x 187
ATV 71HU55N4, HU75N4	175 x 295 x 187
ATV 71HD11N4	210 x 295 x 213
ATV 71HD15N4, HD18N4	230 x 400 x 213
ATV 71 HD22N4	240 x 420 x 236
ATV 71HD30N4, HD37N4	240 x 550 x 266
ATV 71HD45N4…HD75N4	320 x 630 x 290
ATV 71HD90N4	320 x 920 x 377
ATV 71HC11N4	360 x 1022 x 377
ATV 71HC13N4	340 x 1190 x 377
ATV 71HC16N4	440 x 1190 x 377
ATV 71HC20N4…HC28N4	595 x 1190 x 377
ATV 71HC31N4, HC40N4	890 x 1390 x 377
ATV 71HC50N4	1120 x 1390 x 377

(1) These values are given for a nominal switching frequency of 4 kHz up to ATV 71HD30N4 or 2.5 kHz for ATV 71HD37N4… HC50N4 drives for use in continuous operation.
The switching frequency is adjustable from 1…16 kHz up to ATV 71HD75N4 and from 2.5…8 kHz for ATV 71HD90N4… ATV 71HC50N4 drives.
Above 2.5 or 4 kHz, depending on the rating, the drive will reduce the switching frequency automatically in the event of an excessive temperature rise. For continuous operation above the nominal switching frequency, derate the nominal drive current (see derating curves on our website www.schneider-electric.com).
(2) Typical value for the indicated motor power and for the maximum prospective line Isc.
(3) Variants available (see page 22).
(4) Drive supplied without EMC mounting plate. It is included in the UL Type 1 or IP 31 kit, which must be ordered separately (see pages 28 and 29).

***Note:** Consult the summary tables of possible drive, option and accessory combinations (see page 42).*

Variants: page 22 | Accessories: page 23 | Dialogue: page 32 | Drive/option combinations: pages 40

Variable speed drives

Altivar 71

Supply voltage: 380...480 V 50/60 Hz
IP 20 drives

107472



ATV 71PU40N4Z

IP 20 drives on base plate with integrated category C2 EMC filter

Motor		Line supply				Altivar 71					
Power indicated on rating plate *(1)*		Line current *(2)*		Apparent power	Max. prospective line Isc	Maximum continuous current *(1)*		Max. transient current for		Reference *(3) (4) (5)*	Weight
		380 V	480 V	380 V		380 V (IEC)	460 V (NEC)	60 s	2 s		
kW	*HP*	A	A	kVA	kA	A	A	A	A		kg
Three-phase supply voltage: 380…480 V 50/60 Hz											
0.75	*1*	3.7	3	2.4	5	2.3	2.1	3.5	3.8	**ATV 71P075N4Z**	2.700
1.5	*2*	5.8	5.3	3.8	5	4.1	3.4	6.2	6.8	**ATV 71PU15N4Z**	2.700
2.2	*3*	8.2	7.1	5.4	5	5.8	4.8	8.7	9.6	**ATV 71PU22N4Z**	2.700
3	–	10.7	9	7	5	7.8	6.2	11.7	12.9	**ATV 71PU30N4Z**	3.600
4	*5*	14.1	11.5	9.3	5	10.5	7.6	15.8	17.3	**ATV 71PU40N4Z**	3.600
5.5	*7.5*	20.3	17	13.4	22	14.3	11	21.5	23.6	**ATV 71PU55N4Z**	5.000
7.5	*10*	27	22.2	17.8	22	17.6	14	26.4	29	**ATV 71PU75N4Z**	5.000
11	*15*	36.6	30	24.1	22	27.7	21	41.6	45.7	**ATV 71PD11N4Z**	7.000

110502



ATV 71QD90N4

Water-cooled IP 20 drives

Motor		Line supply				Altivar 71					
Power indicated on rating plate *(1)*		Line current *(2)*		Apparent power	Max. prospective line Isc	Maximum continuous current *(1)*		Max. transient current for		Reference *(4)*	Weight
		380 V	480 V	380 V		380 V (IEC)	460 V (NEC)	60 s	2 s		
kW	*HP*	A	A	kVA	kA	A	A	A	A		kg
Three-phase supply voltage: 380…480 V 50/60 Hz											
90	*125*	166	134	109.3	35	179	179	269	295	**ATV 71QD90N4**	80.000
110	*150*	202	163	133	35	215	215	323	355	**ATV 71QC11N4**	80.000
132	*200*	239	192	157.3	35	259	259	388	427	**ATV 71QC13N4**	80.000
160	*250*	289	233	190.2	50	314	314	471	518	**ATV 71QC16N4**	140.000
200	*300*	357	286	235	50	387	387	580	638	**ATV 71QC20N4**	140.000
220	*350*	396	320	260.6	50	427	427	640	704	**ATV 71QC25N4**	140.000
250	*400*	444	357	292.2	50	481	481	721	793		
315	*500*	555	444	365.3	50	616	616	924	1016	**ATV 71QC31N4**	300.000
355	–	637	512	419.3	50	671	671	1006	1107	**ATV 71QC40N4**	300.000
400	*600*	709	568	466.6	50	759	759	1138	1252		
500	*700*	876	699	576.6	50	941	941	1411	1552	**ATV 71QC50N4**	300.000

Dimensions (overall)

Drives	W x H x D mm	Drives	W x H x D mm
ATV 71P075N4Z, PU22N4Z	130 x 230 x 149	ATV 71QD90N4...QC13N4	330 x 950 x 377
ATV 71PU30N4Z, PU40N4Z	155 x 260 x 161	ATV 71QC16N4...QC25N4	585 x 950 x 377
ATV 71P55N4Z, PU75N4Z	175 x 295 x 161	ATV 71QC31N4...QC50N4	1110 x 1150 x 377
ATV 71PD11N4Z	210 x 295 x 187		

(1) These values are given for a nominal switching frequency in continuous operation:
- 4 kHz for ATV 71P●●●N4Z
- 2.5 kHz for ATV 71Q●●●N4
The switching frequency is adjustable from:
- 1...16 kHz for ATV 71P●●●N4Z
- 2.5....8 kHz for ATV 71Q●●●N4
Above 4 kHz, the drive will reduce the switching frequency automatically in the event of excessive temperature rise. For continuous operation above the nominal switching frequency, derate the nominal drive current (see derating curves on our website www.schneider-electric.com).
(2) Typical value for the indicated motor power and for the maximum prospective line Isc.
(3) Variants available (see page 22).
(4) A DC choke must be used (see page 76).
(5) ATV 71P●●●N4Z drives supplied with a plate for EMC mounting and a thermal liner for mounting on the machine frame (see page 27).

***Note**: Consult the summary tables of possible drive, options and accessory combinations on pages 42 and 46.*

Variable speed drives

Altivar 71

Supply voltage: 380...480 V 50/60 Hz
IP 54 drives

107473



ATV 71W075N4

IP 54 drives with integrated category C2 EMC filter

Motor		Line supply				Altivar 71					
Power indicated on rating plate *(1)*		Line current *(2)*		Apparent power	Max. prospective line Isc	Maximum continuous current *(1)*		Max. transient current for		Reference *(3) (4)*	Weight
		380 V	480 V	380 V		380 V (IEC)	460 V (NEC)	60 s	2 s		
kW	*HP*	A	A	kVA	kA	A		A			kg
Three-phase supply voltage: 380…480 V 50/60 Hz											
0.75	*1*	3.7	3	2.4	5	2.3	2.1	3.5	3.8	**ATV 71W075N4**	12.000
1.5	*2*	5.8	5.3	3.8	5	4.1	3.4	6.2	6.8	**ATV 71WU15N4**	12.000
2.2	*3*	8.2	7.1	5.4	5	5.8	4.8	8.7	9.6	**ATV 71WU22N4**	12.000
3	–	10.7	9	7	5	7.8	6.2	11.7	12.9	**ATV 71WU30N4**	13.000
4	*5*	14.1	11.5	9.3	5	10.5	7.6	15.8	17.3	**ATV 71WU40N4**	13.000
5.5	*7.5*	20.3	17	13.4	22	14.3	11	21.5	23.6	**ATV 71WU55N4**	16.000
7.5	*10*	27	22.2	17.8	22	17.6	14	26.4	29	**ATV 71WU75N4**	16.000
11	*15*	36.6	30	24.1	22	27.7	21	41.6	45.7	**ATV 71WD11N4**	21.000
15	*20*	48	39	31.6	22	33	27	49.5	54.5	**ATV 71WD15N4**	31.000
18.5	*25*	45.5	37.5	29.9	22	41	34	61.5	67.7	**ATV 71WD18N4**	31.000
22	*30*	50	42	32.9	22	48	40	72	79.2	**ATV 71WD22N4**	30.500
30	*40*	66	56	43.4	22	66	52	99	109	**ATV 71WD30N4**	38.500
37	*50*	84	69	55.3	22	79	65	118.5	130	**ATV 71WD37N4**	38.500
45	*60*	104	85	68.5	22	94	77	141	155	**ATV 71WD45N4**	61.500
55	*75*	120	101	79	22	116	96	174	191	**ATV 71WD55N4**	61.500
75	*100*	167	137	109.9	22	160	124	240	264	**ATV 71WD75N4**	61.500

107641



ATV 71E5D11N4

IP 54 drives with Vario and integrated category C2 EMC filter

Three-phase supply voltage: 380…480 V 50/60 Hz											
0.75	*1*	3.7	3	2.4	5	2.3	2.1	3.5	3.8	**ATV 71E5075N4**	14.400
1.5	*2*	5.8	5.3	3.8	5	4.1	3.4	6.2	6.8	**ATV 71E5U15N4**	14.400
2.2	*3*	8.2	7.1	5.4	5	5.8	4.8	8.7	9.6	**ATV 71E5U22N4**	14.400
3	–	10.7	9	7	5	7.8	6.2	11.7	12.9	**ATV 71E5U30N4**	15.400
4	*5*	14.1	11.5	9.3	5	10.5	7.6	15.8	17.3	**ATV 71E5U40N4**	15.400
5.5	*7.5*	20.3	17	13.4	22	14.3	11	21.5	23.6	**ATV 71E5U55N4**	18.400
7.5	*10*	27	22.2	17.8	22	17.6	14	26.4	29	**ATV 71E5U75N4**	18.400
11	*15*	36.6	30	24.1	22	27.7	21	41.6	45.7	**ATV 71E5D11N4**	29.700
15	*20*	48	39	31.6	22	33	27	49.5	54.5	**ATV 71E5D15N4**	40.400
18.5	*25*	45.5	37.5	29.9	22	41	34	61.5	67.7	**ATV 71E5D18N4**	40.400
22	*30*	50	42	32.9	22	48	40	72	79.2	**ATV 71E5D22N4**	46.700
30	*40*	66	56	43.4	22	66	52	99	109	**ATV 71E5D30N4**	57.800
37	*50*	84	69	55.3	22	79	65	118.5	130	**ATV 71E5D37N4**	57.800
45	*60*	104	85	68.5	22	94	77	141	155	**ATV 71E5D45N4**	80.400
55	*75*	120	101	79	22	116	96	174	191	**ATV 71E5D55N4**	80.400
75	*100*	167	137	109.9	22	160	124	240	264	**ATV 71E5D75N4**	80.400

Dimensions (overall)

Drives	W x H x D mm	Drives	W x H x D mm
ATV 71W075N4…WU22N4	240 x 490 x 272	ATV 71E5075N4…E5U22N4	240 x 490 x 296
ATV 71WU30N4, WU40N4	240 x 490 x 286	ATV 71E5U30N4, E5U40N4	240 x 490 x 310
ATV 71WU55N4, WU75N4	260 x 525 x 286	ATV 71E5U55N4, E5U75N4	260 x 525 x 310
ATV 71WD11N4	295 x 560 x 315	ATV 71E5D11N4	295 x 560 x 339
ATV 71WD15N4, WD18N4	315 x 665 x 315	ATV 71E5D15N4, E5D18N4	315 x 665 x 340
ATV 71WD22N4	285 x 720 x 315	ATV 71E5D22N4	285 x 720 x 335
ATV 71WD30N4, WD37N4	285 x 880 x 343	ATV 71E5D30N4, E5D37N4	285 x 880 x 383
ATV 71WD45N4…WD75N4	362 x 1000 x 364	ATV 71E5D45N4…E5D75N4	362 x 1000 x 404

(1) These values are given for a nominal switching frequency of 4 kHz up to ATV 71WD30N4 or ATV71E5D30N4, or 2.5 kHz for ATV 71WD37N4…WD75N4 or ATV 71E5D37N4…E5D75N4 used in continuous operation.
The switching frequency is adjustable from 1…16 kHz for all ratings.
Above 2.5 or 4 kHz, depending on the rating, the drive will reduce the switching frequency automatically in the event of an excessive temperature rise. For continuous operation above the nominal switching frequency, derate the nominal drive current (see derating curves on our website www.schneider-electric.com).
(2) Typical value for the indicated motor power and for the maximum prospective line Isc.
(3) Variants available (see page 22).
(4) Drives supplied with a plate for EMC mounting.

***Note:** Consult the summary tables of possible drive, option and accessory combinations (see page 44).*

Variable speed drives
Altivar 71
Supply voltage: 500...690 V 50/60 Hz
IP 20 drives

101014



ATV 71HU22Y

IP 20 drives

Motor		Line supply			Altivar 71			
Power indicated on rating plate *(1)*		Line current *(2)*		Max. prospective line Isc	Maximum continuous current *(1) (3)*		Reference *(4)*	Weight
500 V	575 V	500 V	600 V		500 V	575 V		
kW	*HP*	A	A	kA	A	A		kg
Three-phase supply voltage: 500…600 V 50/60 Hz								
1.5	*2*	5.6	4.9	22	3.2	2.7	**ATV 71HU15S6X**	7.500
2.2	*3*	7.6	6.7	22	4.5	3.9	**ATV 71HU22S6X**	7.500
3	–	9.9	10	22	5.8	–	**ATV 71HU30S6X**	7.500
4	*5*	12.5	10.9	22	7.5	6.1	**ATV 71HU40S6X**	7.500
5.5	*7.5*	16.4	14.2	22	10	9	**ATV 71HU55S6X**	7.500
7.5	*10*	21.4	18.4	22	13.5	11	**ATV 71HU75S6X**	7.500

107538



ATV 71HD37Y

Motor			Line supply				Altivar 71				
Power indicated on rating plate *(1)*			Line current *(2)*			Max. prospective line Isc	Maximum continuous current *(1) (3)*			Reference *(4)*	Weight
500 V	575 V	690 V	500 V	600 V	690 V		500 V	575 V	690 V		
kW	*HP*	kW	A	A	A	kA	A	A	A		kg
Three-phase supply voltage: 500…690 V 50/60 Hz											
1.5	*2*	2.2	3.8	3.2	4	22	3.2	2.7	4	**ATV 71HU22Y**	30.000
2.2	*3*	3	5.2	4.4	5.2	22	4.5	3.9	4.5	**ATV 71HU30Y**	30.000
3	–	4	6.8	–	6.6	22	5.8	–	5.5	**ATV 71HU40Y**	30.000
4	*5*	5.5	8.6	7.2	8.6	22	7.5	6.1	7.5	**ATV 71HU55Y**	30.000
5.5	*7.5*	7.5	11.2	9.5	11.2	22	10	9	10	**ATV 71HU75Y**	30.000
7.5	*10*	11	14.6	12.3	15.5	22	13.5	11	13.5	**ATV 71HD11Y**	30.000
11	*15*	15	19.8	16.7	20.2	22	18.5	17	18.5	**ATV 71HD15Y**	30.000
15	*20*	18.5	24	21	24	22	24	22	24	**ATV 71HD18Y**	30.000
18.5	*25*	22	29	24	27	22	29	27	27	**ATV 71HD22Y**	30.000
22	*30*	30	33	28	34	22	35	32	35	**ATV 71HD30Y**	30.000
30	*40*	37	48	41	47	22	47	41	43	**ATV 71HD37Y**	68.000
37	*50*	45	62	51	55	22	59	52	54	**ATV 71HD45Y**	68.000
45	*60*	55	68	57	63	22	68	62	62	**ATV 71HD55Y**	68.000
55	*75*	75	84	70.5	88	22	85	77	84	**ATV 71HD75Y**	68.000
75	*100*	90	109	92	101	22	110	99	104	**ATV 71HD90Y**	68.000
90	*125*	110	128	113	117	28	136	125	125	**ATV 71HC11Y** *(5) (6)*	102.000
110	*150*	132	153	133	137	28	165	144	150	**ATV 71HC13Y** *(5) (6)*	102.000
132	–	160	182	–	163	35	200	–	180	**ATV 71HC16Y** *(5) (6)*	102.000
160	*200*	200	227	204	212	35	240	192	220	**ATV 71HC20Y** *(5) (6)*	181.000
200	*250*	250	277	249	256	35	312	242	290	**ATV 71HC25Y** *(5) (6)*	181.000
250	*350*	315	342	311	317	35	390	336	355	**ATV 71HC31Y** *(5) (6)*	181.000
315	*450*	400	439	401	409	35	462	412	420	**ATV 71HC40Y** *(5) (6)*	383.000
400	*550*	500	544	491	498	35	590	528	543	**ATV 71HC50Y** *(5) (6)*	383.000
500	*700*	630	673	613	616	42	740	672	675	**ATV 71HC63Y** *(5) (6)*	383.000

107540



ATV 71HC25Y

+

107532



VW3 A4 372 (line choke mandatory) (5)

Dimensions (overall)

Drives	W x H x D mm
ATV 71HU15S6X…HU75S6X	210 x 295 x 213
ATV 71HU22Y…HD30Y	240 x 420 x 236
ATV 71HD37Y…HD90Y	320 x 630 x 290
ATV 71HC11Y…HC16Y	340 x 1190 x 377
ATV 71HC20Y…HC31Y	595 x 1190 x 377
ATV 71HC40Y…HC63Y	1120 x 1390 x 377

(1) These values are given for a nominal switching frequency of 4 kHz for ATV 71HU●●S6X and for ATV 71 HU22Y…HD30Y or 2.5 kHz for ATV 71HD37Y…HC63Y for use in continuous operation.
The switching frequency is adjustable from 2.5…6 kHz for ATV 71HU●●S6X and for ATV 71HU22Y…HD30Y, and 2.5…4.9 kHz for ATV 71HD37Y…ATV 71HC63Y drives.
Above 2.5 kHz or 4 kHz, depending on the rating, the drive will reduce the switching frequency automatically in the event of an excessive temperature rise. For continuous operation above the nominal switching frequency, derate the nominal drive current (see derating curves on our website www.schneider-electric.com).
(2) Typical value for the indicated motor power and for the maximum prospective line Isc.
(3) The maximum transient current for:
- 60 seconds is equal to 150% of the maximum continuous current
- 2 seconds is equal to 165% of the maximum continuous current
(4) Variants available (see page 22).
(5) Line choke mandatory for ATV 71HC11Y…HC63Y drives, unless a special transformer is used (12-pulse). The line choke must be ordered separately (see page 78).
(6) Drive supplied without EMC mounting plate. It is included in the UL Type 1 or IP 31 kit, which must be ordered separately (see pages 28 and 29).

Note: *Consult the summary tables of possible drive, option and accessory combinations (see pages 46 and 48).*

Variable speed drives
Altivar 71
Supply voltage: 500...690 V 50/60 Hz
IP 20 drives

110504



ATV 71QC11Y

Water-cooled IP 20 drives

Motor			Line supply				Altivar 71				
Power indicated on rating plate *(1)*			Line current *(2)*			Max. prospective line Isc	Maximum continuous current *(1) (3)*			Reference	Weight
500 V	575 V	690 V	500 V	600 V	690 V		500 V	575 V	690 V		
kW	*HP*	kW	A	A	A	kA	A	A	A		kg
Three-phase supply voltage: 500…690 V 50/60 Hz											
90	*125*	110	128	113	117	28	136	125	125	**ATV 71QC11Y**	80.000
110	*150*	132	153	133	137	28	165	144	150	**ATV 71QC13Y**	80.000
132	–	160	182	–	163	35	200	–	180	**ATV 71QC16Y**	80.000
160	*200*	200	227	204	212	35	240	192	220	**ATV 71QC20Y**	140.000
200	*250*	250	277	249	256	35	312	242	290	**ATV 71QC25Y**	140.000
250	*350*	315	342	311	317	35	390	336	355	**ATV 71QC31Y**	140.000
315	*450*	400	439	401	409	35	462	412	420	**ATV 71QC40Y**	300.000
400	*550*	500	544	491	498	35	590	528	543	**ATV 71QC50Y**	300.000
500	*700*	630	673	613	616	42	740	672	675	**ATV 71QC63Y**	300.000

Dimensions (overall)

Drives	W x H x D mm
ATV 71QC11Y...QC16Y	330 x 950 x 377
ATV 71QC20Y...QC31Y	585 x 950 x 377
ATV 71QC40Y...QC63Y	1110 x 1150 x 377

(1) These values are given for a nominal switching frequency of 2.5 kHz for use in continuous operation.
The switching frequency is adjustable from 2.5…4.9 kHz.
Above 2.5 kHz, depending on the rating, the drive will reduce the switching frequency automatically in the event of an excessive temperature rise. For continuous operation above the nominal switching frequency, derate the nominal drive current (see derating curves on our website www.schneider-electric.com).
(2) Typical value for the indicated motor power and for the maximum prospective line Isc.
(3) The maximum transient current for:
- 60 seconds is equal to 150% of the maximum continuous current
- 2 seconds is equal to 165% of the maximum continuous current

Note: *Consult the summary tables of possible drive, option and accessory combinations (see page 48).*

Variable speed drive for synchronous motor with speed feedback

The drives are supplied as standard for asynchronous motors with or without sensor feedback.

ATV 71H075N4…HD75N4 drives can control not only those motors included in the standard offer, but also synchronous motors with speed feedback, by adding **383** at the end of the reference.
Example: ATV 71H075N4 becomes **ATV 71H075N4383**.
See page 52 for the available encoder interface cards.

Variable speed drive with additional power supply

When the total power consumption does not exceed 200 mA, ATV 71W●●●N4 drives can be supplied with an additional 24 V ⎓ power supply, which allows additional consumption of 250 mA.

In this case, add **A24** at the end of the reference. Example: ATV 71W075N4 becomes **ATV 71W075N4A24**.

Variable speed drive in a reinforced version

This variant enables variable speed drives to operate in difficult ambient pollution conditions and complies with standard IEC60721-3-3 class 3C2.
ATV 71HD55M3X, HD75M3X, ATV 71HD90N4…HC50N4, ATV71H●●●Y and ATV 71W●●●N4A24 drives are supplied as standard in a reinforced version.

To order ATV 71H●●●M3 and ATV 71H075N4…HD75N4 variable speed drives in a reinforced version, add **S337** at the end of the reference.
Example: ATV 71H075M3 becomes **ATV 71H075M3S337**.

To order ATV 71HD11M3X…HD45M3X drives in this version, add **337** at the end of the reference.
Example: ATV 71HD11M3X becomes **ATV 71HD11M3X337**.

In the reinforced version, the variable speed drive is supplied with a remote graphic display terminal.

Variable speed drive with integrated terminal

Except for ATV 71P●●●N4Z drives on base plates supplied with a integrated display terminal, all drives come with a remote graphic display terminal and an integrated terminal as standard.

ATV 71H037M3…HD15M3X and ATV 71H075N4…HD75N4 drives can be ordered without a remote graphic display terminal. They will then have the integrated terminal only. In this case, add **Z** at the end of the reference.
Example: ATV 71H075M3 becomes **ATV 71H075M3Z**.

To order ATV 71H075N4383...HD75N4383 drives without a graphic display terminal, please contact our Customer Care Centre.

Variable speed drive without DC choke

ATV 71HD90N4…HC50N4 drives are supplied as standard with a DC choke which must be used when connecting drives to the three-phase supply.

They can be ordered without a DC choke for connections to the DC bus or when using a line choke (see page 78), by adding **D** at the end of the reference.
Example: ATV 71HD90N4 becomes **ATV 71HD90N4D**.

Variable speed drive with EMC plate conforming to NEMA type 12 standard

ATV 71W●●●N4 drives are supplied as standard with a European version EMC plate. To order drives with an EMC plate conforming to NEMA type 12 standard, add **U** at the end of the reference. This plate is supplied without a drill hole.
Example: ATV 71W075N4 becomes **ATV 71W075N4U**.
Note:
- ATV 71H037M3…HD45M3X, ATV 71H075N4…HD75N4, ATV 71H●●●S6X and ATV 71HU22Y…HD90Y drives are supplied as standard with a European version EMC plate.
- ATV 71HD55M3X, HD75M3X, ATV 71HD90N4…HC50N4, ATV 71P●●●N4Z and ATV71HC11Y…HC63Y drives are supplied as standard without a plate for EMC mounting.
Depending on the reference, the European version EMC plate is included in the UL Type 1 or IP 31 kit (see pages 28 and 29).

Variable speed drives
Altivar 71
Options: Accessories

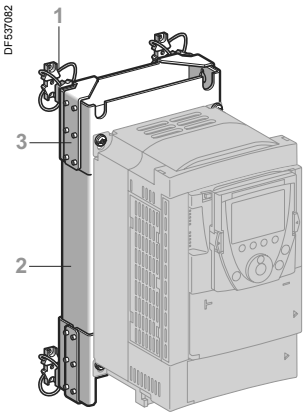

ATV 71HD11M3X drive mounted on DNV kit VW3 A9 625

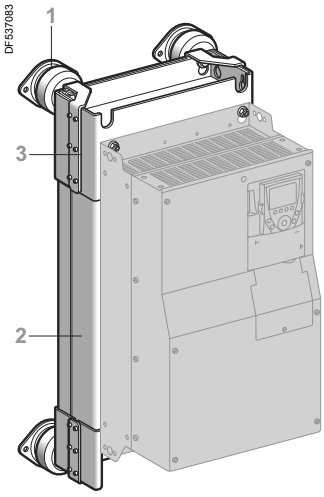

ATV 71HD45N4 drive mounted on DNV kit VW3 A9 628

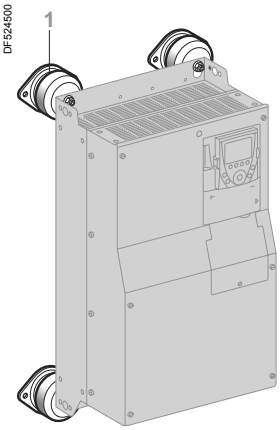

ATV 71H●●●Y drive mounted on DNV kit VW3 A9 64●

DNV kit

This kit enables Altivar 71 variable speed drives to satisfy the requirements of the DNV certification body.

For the following variable speed drives:
- ATV 71H●●●M3
- ATV 71HD11M3X…HD45M3X
- ATV 71H075N4…HD75N4

the kit includes:
- Shock-absorbing mounts 1
- An additional EMC input filter 2
- EMC filter supports 3
- Fixing accessories

It is mounted on the back of the variable speed drive on the additional EMC filter supplied with the DNV kit as standard.

References

For drives	Reference	Weight kg
ATV 71H037M3…HU15M3 ATV 71H075N4…HU22N4	**VW3 A9 621**	5.400
ATV 71HU22M3…HU40M3 ATV 71HU30N4, HU40N4	**VW3 A9 622**	7.400
ATV 71HU55M3 ATV 71HU55N4, HU75N4	**VW3 A9 623**	9.800
ATV 71HU75M3 ATV 71HD11N4	**VW3 A9 624**	11.200
ATV 71HD11M3X, HD15M3X ATV 71HD15N4, HD18N4	**VW3 A9 625**	16.500
ATV 71HD18M3X, HD22M3X ATV 71HD22N4	**VW3 A9 626**	20.000
ATV 71HD30N4, HD37N4	**VW3 A9 627**	22.500
ATV 71HD30M3X…HD45M3X ATV 71HD45N4…HD75N4	**VW3 A9 628**	53.500

For ATV 71HU22Y…HD30Y variable speed drives, the kit includes:
- Shock-absorbing mounts 1
- An EMC input filter
- Fixing accessories

The shock-absorbing mounts are mounted on the back of the variable speed drive. The EMC filter is positioned beside the unit.

Reference

For drives	Reference	Weight kg
ATV 71HU22Y…HD30Y	**VW3 A9 642**	9.000

For ATV 71HD37Y…HD90Y variable speed drives, the kit includes:
- Shock-absorbing mounts 1
- An EMC input filter
- A line choke
- Fixing accessories

The shock-absorbing mounts are mounted on the back of the variable speed drive. The EMC filter is positioned beside the unit. The line choke must be installed upstream of the drive.

Reference

For drives	Reference	Weight kg
ATV 71HD37Y…HD90Y	**VW3 A9 643**	23.000

Variable speed drives
Altivar 71
Options: Accessories

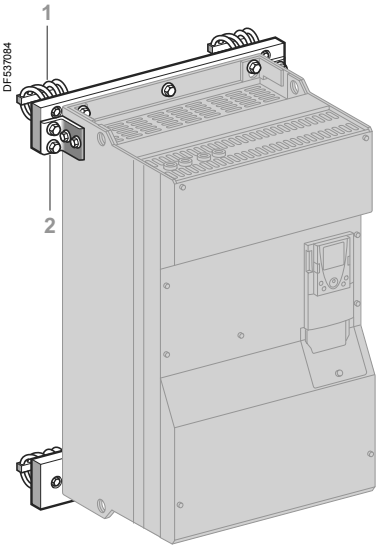

ATV 71HC11N4D drive mounted on DNV kit VW3 A9 631

DNV kit (continued)

For the following variable speed drives:
- ATV 71HD55M3X, HD75M3X
- ATV 71HD90N4D…HC50N4D
- ATV 71HC11Y…HC63Y

the kit includes:
- Shock-absorbing mounts 1
- The mechanical fittings (rails and brackets) required for mounting 2
- Fixing accessories

It is mounted on the back of the variable speed drive using the mechanical fittings.

References

For drives	Line choke *(1)*	EMC filter *(2)*	Reference	Weight kg
ATV 71HD55M3X *(3)*	VW3 A4 562	VW3 A4 410	**VW3 A9 629**	–
ATV 71HD90N4D	VW3 A4 558	VW3 A4 410	**VW3 A9 629**	–
ATV 71HD75M3XD *(3)*	VW3 A4 563	VW3 A4 410	**VW3 A9 631**	–
ATV 71HC11N4D	VW3 A4 559	VW3 A4 410	**VW3 A9 631**	–
ATV 71HC13N4D	VW3 A4 560	VW3 A4 410	**VW3 A9 633**	–
ATV 71HC16N4D	VW3 A4 561	VW3 A4 411	**VW3 A9 635**	–
ATV 71HC20N4D	VW3 A4 569	VW3 A4 411	**VW3 A9 637**	–
ATV 71HC25N4D, HC28N4D	VW3 A4 564	VW3 A4 411	**VW3 A9 638**	–
ATV 71HC31N4D	VW3 A4 565	VW3 A4 412	**VW3 A9 639**	–
ATV 71HC40N4D	2 x VW3 A4 569	VW3 A4 412	**VW3 A9 640**	–
ATV 71HC50N4D	2 x VW3 A4 564	VW3 A4 413	**VW3 A9 641**	–
ATV 71HC11Y *(4)*	VW3 A4 570	–	**VW3 A9 644**	–
ATV 71HC13Y, HC16Y *(4)*	VW3 A4 571	–	**VW3 A9 645**	–
ATV 71HC20Y *(4)*	VW3 A4 560	–	**VW3 A9 646**	–
ATV 71HC25Y, HC31Y *(4)*	VW3 A4 572	–	**VW3 A9 647**	–
ATV 71HC40Y *(4)*	2 x VW3 A4 568	–	**VW3 A9 648**	–
ATV 71HC50Y, HC63Y *(4)*	2 x VW3 A4 572	–	**VW3 A9 649**	–

DNV shock-absorbing mounts

These mounts 1 are mounted on ATV 71H075N4…HD37N4 and ATV 71HU22Y…HD90Y drives.
They are supplied with the fixing accessories necessary for fixing the shock-absorbing mounts on the back of the drive.

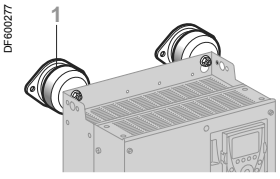

DNV shock-absorbing mounts

References

Description	For drives	Reference	Weight kg
DNV shock-absorbing mounts 1 supplied with fixing accessories	ATV 71H075N4…HU75N4	**VW3 A9 650**	0.215
	ATV 71HD11N4…HD18N4	**VW3 A9 651**	0.345
	ATV 71HD22N4…HD37N4	**VW3 A9 652**	0.650
	ATV 71HU22Y…HD30Y	**VW3 A9 653**	2.700
	ATV 71HD37Y…HD90Y	**VW3 A9 654**	2.700

(1) A line choke must be used which must be ordered separately (see page 78).
(2) An EMC filter must be used which must be ordered separately (see page 84).
(3) If using the DNV kit, do not mount the DC choke supplied as standard with the drive.
(4) When using a DNV kit, the variable speed drive and the transformer for the fan are mounted separately. Please refer to the dimensions on our website www.schneider-electric.com.

536943

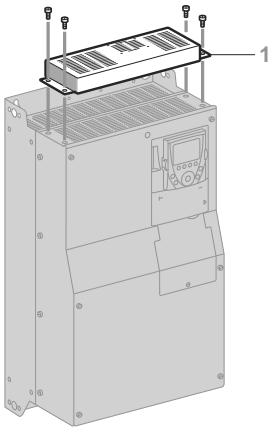

Control card fan kit

Control card fan kit
(for ATV 71H●●●●● drives on heatsink)

This kit is required for ATV 71HD18M3X…HD45M3X, ATV 71HD22N4…HD75N4 and ATV 71HU22Y…HD90Y drives in order that they can operate at ambient temperatures between 50°C and 60°C, for example if they are mounted in an IP 54 enclosure. The circulation of air around the electronic cards prevents the formation of hot spots.

To ascertain the derating to be applied to the drive nominal current, please refer to the curves on our website www.schneider-electric.com.

The kit 1 is mounted on the upper part of the drive. It is powered by the drive and includes:
- A fan subassembly
- Fixing accessories
- A manual

References

For drives	Reference	Weight kg
ATV 71HD18M3X, HD22M3X ATV 71HD22N4 ATV 71HU22Y…HD30Y	**VW3 A9 404**	–
ATV 71HD30N4, HD37N4	**VW3 A9 405**	–
ATV 71HD30M3X…HD45M3X	**VW3 A9 406**	–
ATV 71HD45N4…HD75N4 ATV 71HD37Y…HD90Y	**VW3 A9 407**	–

Adaptor for 115 V ∿ logic inputs

This adaptor is used to connect 115 V ∿ logic signals to the logic inputs on the drive or an I/O extension card.

7 logic inputs with capacitive impedance at 60 Hz of 0.22 µF are available for connecting the logic signals:
- Max. current: 200 mA
- Response time: 5 ms to change from state 0 to state 1, 20 ms to change from state 1 to state 0
- Logic state 0 for a voltage below 20 V, logic state 1 for a voltage between 70 V and 132 V

The power supply must be provided by a 115 V external power supply (min. 70 V, max. 132 V).

Reference

Description	Reference	Weight kg
Adaptor for 115 V ∿ logic inputs	**VW3 A3 101**	–

536946

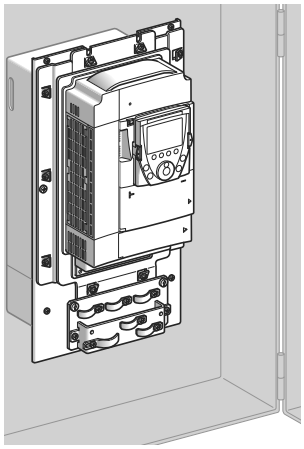

ATV 71HU75N4 flush-mounted drive

Kit for flush-mounting in a dust and damp proof enclosure
(for ATV 71H●●●●● drives on heatsink)

This kit can be used to mount the power section of the drive outside the enclosure (IP 54 degree of protection), which reduces the power dissipated into the enclosure *(1)*.

It is available for ATV 71H●●●M3, ATV 71H●●●M3X, ATV 71H075N4…HC28N4, ATV 71HD90N4D…HC28N4D and ATV 71HU22Y…HC31Y drives.

With this type of mounting, the maximum internal temperature in the enclosure can then reach 60°C without it being necessary to derate the drive current.
Between 50°C and 60°C, a control card fan kit must be used for ATV 71HD18M3X…HD45M3X, ATV 71HD22N4…HD75N4, ATV 71H●●●S6X and ATV 71HU22Y…HD90Y drives to prevent hot spots (see page 25).

The back of the enclosure must be drilled and cut out for this type of mounting.

The kit includes:
- A metal frame of the right size for the drive rating
- Corner pieces
- Seals
- A fan support (this can be used to move the fans so that they can be accessed from the front of the enclosure)
- Fixing accessories
- A manual

536947

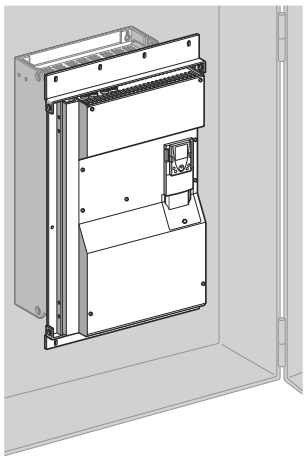

ATV 71HC28N4D flush-mounted drive

References

For drives		Reference	Weight kg
ATV 71H037M3…HU15M3 ATV 71H075N4…HU22N4		**VW3 A9 501**	2.700
ATV 71HU22M3…HU40M3 ATV 71HU30N4, HU40N4		**VW3 A9 502**	3.100
ATV 71HU55M3 ATV 71HU55N4, HU75N4		**VW3 A9 503**	3.700
ATV 71HU75M3 ATV 71HD11N4 ATV 71HU15S6X…HU75S6X		**VW3 A9 504**	4.600
ATV 71HD11M3X, HD15M3X ATV 71HD15N4, HD18N4		**VW3 A9 505**	4.900
ATV 71HD18M3X, HD22M3X ATV 71HD22N4 ATV 71HU22Y…HD30Y		**VW3 A9 506**	3.900
ATV 71HD30N4, HD37N4		**VW3 A9 507**	4.200
ATV 71HD30M3X…HD45M3X		**VW3 A9 508**	4.900
ATV 71HD45N4…HD75N4 ATV 71HD37Y…HD90Y		**VW3 A9 509**	5.200
ATV 71HD55M3X *(2)* ATV 71HD90N4 *(2)* ATV 71HD90N4D *(3)*		**VW3 A9 510**	5.100
ATV 71HD75M3X *(2)* ATV 71HC11N4 *(2)* ATV 71HC11N4D *(3)*		**VW3 A9 511**	3.600
ATV 71HC13N4 *(2)* ATV 71HC13N4D *(3)* ATV 71HC11Y…HC16Y *(4)*		**VW3 A9 512**	4.300
ATV 71HC16N4 *(2)* ATV 71HC16N4D *(3)*		**VW3 A9 513**	4.400
ATV 71HC20N4…HC28N4 *(2)* ATV 71HC20N4D…HC28N4D *(3)* ATV 71HC20Y…HC31Y *(4)*	Without braking unit	**VW3 A9 514**	4.700
	With braking unit	**VW3 A9 515**	4.700

(1) Power dissipated in the enclosure for dust and damp proof flush-mounting: please consult our website www.schneider-electric.com.
(2) Drives supplied as standard with a DC choke. In this case, cut out and drill the enclosure for the choke.
(3) Drives supplied without DC choke.
(4) Drives supplied as standard with a transformer for the fan. In this case, cut out and drill the enclosure for the transformer.

Variable speed drives: page 16 | Variants: page 22 | Dialogue: page 32 | Drive/option combinations: page 40

DF536952

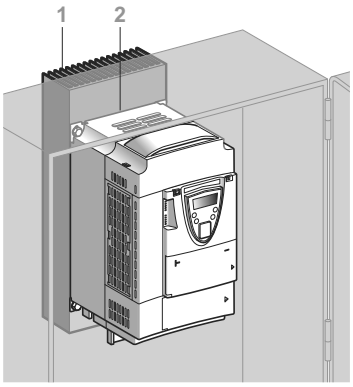

ATV 71PU22N4Z drive in a dust and damp proof enclosure

Kit for mounting in a dust and damp proof enclosure
(for ATV 71P●●●N4Z drives on base plate)

This kit can be used to mount a drive "on a base plate" inside a dust and damp proof enclosure (IP 54 degree of protection). Heat is dissipated via a heatsink mounted outside the enclosure.

This type of mounting simply requires that a hole be drilled in the enclosure at the same level as the drive fixing holes used to mount the heatsink.

The kit includes:
- A heatsink 1
- A thermal liner 2
- Sealing joints
- A manual

Enclosure characteristics

The steel used for the floor-standing or wall-mounted enclosure which is to house the drive must meet the following requirements:
- Thickness 1.5 to 3 mm
- □ Steel: Stainless or paint-finished smooth steel
- □ Heat-treated epoxy paintwork (lacquer finish not permitted), max. depth 70 µm, fine or medium texture

References

For drives	Reference	Weight kg
ATV 71P075N4Z…PU22N4Z	**VW3 A9 801**	–
ATV 71PU30N4Z, PU40N4Z	**VW3 A9 802**	–
ATV 71PU55N4Z, PU75N4Z	**VW3 A9 803**	–

DF536951

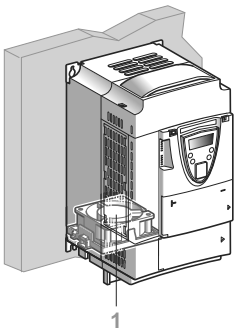

ATV 71PU22N4Z drive with VZ3 V1 203 fan

Fan for variable speed drives on base plate

This fan 1 is required for ATV 71P●●●N4Z drives if they are not equipped with a DC choke (see page 76).

It is mounted on the underside of the drive, thereby enabling installation dimensions to be optimized. It is powered by the drive.

References

For drives	Reference	Weight kg
ATV 71P075N4Z…PU22N4Z	**VZ3 V1 203**	–
ATV 71PU30N4Z, PU40N4Z	**VZ3 V1 209**	–
ATV 71PU55N4Z, PU75N4Z	**VZ3 V1 204**	–
ATV 71PD11N4Z	**VZ3 V1 210**	–

534544

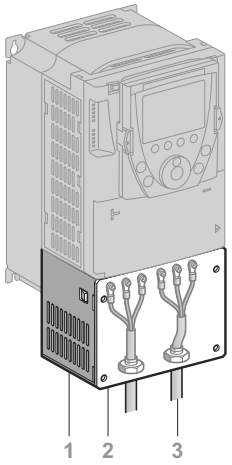

536950

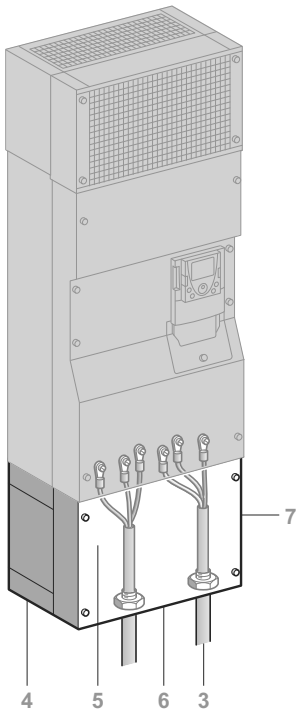

UL Type 1 conformity kits

UL Type 1 conformity kit (for mounting outside the enclosure)

When the drive is mounted directly on a wall outside the enclosure, this kit can be used to ensure UL Type 1 conformity when connecting the cables with a tube.
The shielding is connected inside the kit.

For ATV 71H●●●M3, ATV 71HD11M3X…HD45M3X, ATV 71H075N4...HD75N4, ATV 71P●●●N4Z, ATV 71H●●●S6X and ATV 71HU22Y…HD90Y drives, the kit includes:
- All the mechanical fittings 1 including a pre-cut plate 2 for connecting the tubes 3
- Fixing accessories
- A manual

For ATV 71HD55M3X, HD75M3X, ATV 71HD90N4…HC28N4, ATV 71HD90N4D… HC28N4D and ATV 71HC11Y…HC31Y drives, the kit includes:
- An IP 54 casing 4 used to maintain the IP 54 degree of protection for the power section
- An EMC plate 5
- A UL Type 1 cover 7
- A pre-drilled plate 6 for connecting the tubes 3
- Fixing accessories
- A manual

References

For drives		Reference	Weight kg
ATV 71H037M3…HU15M3 ATV 71H075N4…HU22N4 ATV 71P075N4Z…PU22N4Z		**VW3 A9 201**	1.300
ATV 71HU22M3…HU40M3 ATV 71HU30N4, HU40N4 ATV 71PU30N4Z, PU40N4Z		**VW3 A9 202**	1.500
ATV 71HU55M3 ATV 71HU55N4, HU75N4 ATV 71PU55N4Z, PU75N4Z		**VW3 A9 203**	1.800
ATV 71HU75M3 ATV 71HD11N4 ATV 71HU15S6X…HU75S6X		**VW3 A9 204**	2.000
ATV 71HD11M3X, HD15M3X ATV 71HD15N4, HD18N4		**VW3 A9 205**	2.800
ATV 71HD18M3X, HD22M3X ATV 71HD22N4 ATV 71HU22Y…HD30Y		**VW3 A9 206**	4.000
ATV 71HD30N4, HD37N4		**VW3 A9 207**	5.000
ATV 71HD30M3X…HD45M3X		**VW3 A9 217**	7.000
ATV 71HD45N4…HD75N4 ATV 71HD37Y…HD90Y		**VW3 A9 208**	7.200
ATV 71HD55M3X *(1)* ATV 71HD90N4 *(1)* ATV 71HD90N4D *(2)*		**VW3 A9 209**	9.400
ATV 71HD75M3X *(1)* ATV 71HC11N4 *(1)* ATV 71HC11N4D *(2)*		**VW3 A9 210**	11.800
ATV 71HC13N4 *(1)* ATV 71HC13N4D *(2)* ATV 71HC11Y…HC16Y *(3)*		**VW3 A9 211**	11.600
ATV 71HC16N4 *(1)* ATV 71HC16N4D *(2)*		**VW3 A9 212**	14.600
ATV 71HC20N4…HC28N4 *(1)* ATV 71HC20N4D…HC28N4D *(2)* ATV 71HC20Y…HC31Y *(3)*	Without braking unit	**VW3 A9 213**	19.500
	With braking unit	**VW3 A9 214**	19.500

(1) Drives supplied as standard with a DC choke.
(2) Drives supplied without DC choke.
(3) Drives supplied as standard with a transformer for the fan.

536948

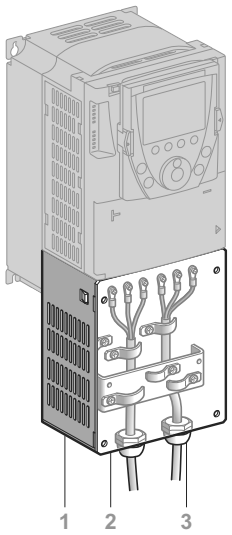

IP 21 conformity kit

536949

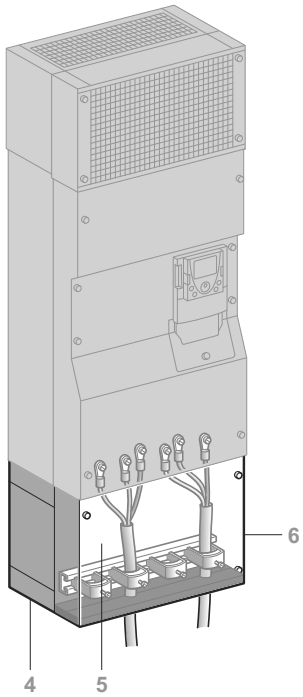

IP 31 conformity kit

IP 21 or IP 31 conformity kit (mounting outside the enclosure)

When the drive is mounted directly on a wall outside the enclosure, this kit can be used to ensure IP 21 or IP 31 degree of protection when connecting the cables with a cable gland.
The shielding is connected inside the kit.

For ATV 71H●●●M3, ATV 71HD11M3X…HD45M3X, ATV 71H075N4…HD75N4, ATV 71P●●●N4Z, ATV 71H●●●S6X and ATV 71HU22Y…HD90Y drives, the kit conforms to IP 21 degree of protection and includes:
- All the mechanical fittings 1 including a drilled plate 2 for attaching the cable glands 3
- Fixing accessories
- A manual

For ATV 71HD55M3X, HD75M3X, ATV 71HD90N4…HC50N4 and ATV 71HC11Y… HC63Y drives, the kit conforms to IP 31 degree of protection and includes:
- An IP 54 casing 4 used to maintain the IP 54 degree of protection for the power section
- An EMC plate with cable clamps 5
- An IP 31 cover 6
- Fixing accessories
- A manual

References

For drives		Degree of protection	Reference	Weight kg
ATV 71H037M3…HU15M3 ATV 71H075N4…HU22N4 ATV 71P075N4Z…PU22N4Z		IP 21	**VW3 A9 101**	1.300
ATV 71HU22M3…HU40M3 ATV 71HU30N4, HU40N4 ATV 71PU30N4Z, PU40N4Z		IP 21	**VW3 A9 102**	1.500
ATV 71HU55M3 ATV 71HU55N4, HU75N4 ATV 71PU55N4Z, PU75N4Z		IP 21	**VW3 A9 103**	1.800
ATV 71HU75M3 ATV 71HD11N4 ATV 71HU15S6X…HU75S6X		IP 21	**VW3 A9 104**	2.000
ATV 71HD11M3X, HD15M3X ATV 71HD15N4, HD18N4		IP 21	**VW3 A9 105**	2.800
ATV 71HD18M3X, HD22M3X ATV 71HD22N4 ATV 71HU22Y…HD30Y		IP 21	**VW3 A9 106**	4.000
ATV 71HD30N4, HD37N4		IP 21	**VW3 A9 107**	5.000
ATV 71HD30M3X…HD45M3X		IP 21	**VW3 A9 117**	7.000
ATV 71HD45N4…HD75N4 ATV 71HD37Y…HD90Y		IP 21	**VW3 A9 108**	7.000
ATV 71HD55M3X *(1)* ATV 71HD90N4 *(1)* ATV 71HD90N4D *(2)*		IP 31	**VW3 A9 109**	9.400
ATV 71HD75M3X *(1)* ATV 71HC11N4 *(1)* ATV 71HC11N4D *(2)*		IP 31	**VW3 A9 110**	11.800
ATV 71HC13N4 *(1)* ATV 71HC13N4D *(2)* ATV 71HC11Y…HC16Y *(3)*		IP 31	**VW3 A9 111**	11.600
ATV 71HC16N4 *(1)* ATV 71HC16N4D *(2)*		IP 31	**VW3 A9 112**	14.600
ATV 71HC20N4…HC28N4 *(1)* ATV 71HC20N4D…HC28N4D *(2)* ATV 71HC20Y…HC31Y *(3)*	Without braking unit	IP 31	**VW3 A9 113**	19.500
	With braking unit	IP 31	**VW3 A9 114**	19.500
ATV 71HC31N4, HC40N4 *(1)* ATV 71HC31N4D, HC40N4D *(2)*		IP 31	**VW3 A9 115**	25.000
ATV 71HC50N4 *(1)* ATV 71HC50N4D *(2)* ATV 71HC40Y…HC63Y *(3)*		IP 31	**VW3 A9 116**	35.000

(1) Drives supplied as standard with a DC choke.
(2) Drives supplied without DC choke.
(3) Drives supplied as standard with a transformer for the fan.

Variable speed drives: page 16 | Variants: page 22 | Dialogue: page 32 | Drive/option combinations: page 40

Variable speed drives
Altivar 71
Options: Accessories

536945

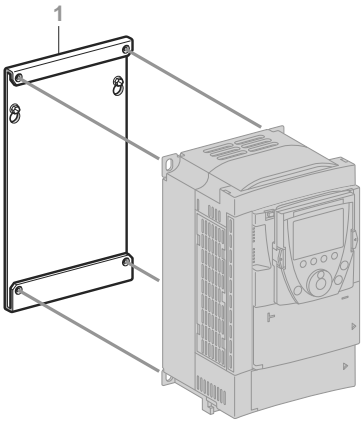

Substitution kit VW3 A9 304

Substitution kit for Altivar 58 or Altivar 58F drives

This kit 1 is used to install an Altivar 71 drive in the place of an Altivar 58 or Altivar 58F drive using the same fixing holes. It includes the mechanical adaptors required for mounting.

High torque application (170% Tn)

Old drive	Motor Power		Replaced by	Reference	Weight
	kW	*HP*			kg
200…240 V single-phase supply voltage					
ATV 58HU09M2	0,37	*0,5*	ATV 71H075M3	**VW3 A9 301**	–
ATV 58HU18M2	0,75	*1*	ATV 71HU15M3	**VW3 A9 301**	–
ATV 58HU29M2	1,5	*2*	ATV 71HU22M3	**VW3 A9 303**	–
ATV 58HU41M2	2,2	*3*	ATV 71HU30M3	**VW3 A9 303**	–
ATV 58HU72M2	3	–	ATV 71HU40M3	**VW3 A9 304**	–
ATV 58HU90M2	4	*5*	ATV 71HU55M3	**VW3 A9 306**	–
ATV 58HD12M2	5,5	*7,5*	ATV 71HU75M3	**VW3 A9 307**	–
200…240 V three-phase supply voltage					
ATV 58HU29M2	1,5	*2*	ATV 71HU15M3	**VW3 A9 302**	–
ATV 58HU41M2	2,2	*3*	ATV 71HU22M3	**VW3 A9 303**	–
ATV 58HU54M2	3	–	ATV 71HU30M3	**VW3 A9 304**	–
ATV 58HU72M2	4	*5*	ATV 71HU40M3	**VW3 A9 304**	–
ATV 58HU90M2	5,5	*7,5*	ATV 71HU55M3	**VW3 A9 306**	–
ATV 58HD12M2	7,5	*10*	ATV 71HU75M3	**VW3 A9 307**	–
ATV 58HD16M2X	11	*15*	ATV 71HD11M3X	**VW3 A9 309**	–
ATV 58HD23M2X	15	*20*	ATV 71HD15M3X	**VW3 A9 309**	–
ATV 58HD28M2X	18,5	*25*	ATV 71HD18M3X	**VW3 A9 312**	–
ATV 58HD33M2X	22	*30*	ATV 71HD22M3X	**VW3 A9 312**	–
ATV 58HD46M2X	30	*40*	ATV 71HD30M3X	**VW3 A9 314**	–
380…480 V three-phase supply voltage					
ATV 58HU18N4	0,75	*1*	ATV 71H075N4	**VW3 A9 302**	–
ATV 58HU29N4	1,5	*2*	ATV 71HU15N4	**VW3 A9 302**	–
ATV 58HU41N4	2,2	*3*	ATV 71HU22N4	**VW3 A9 302**	–
ATV 58HU54N4	3	–	ATV 71HU30N4	**VW3 A9 304**	–
ATV 58HU72N4	4	*5*	ATV 71HU40N4	**VW3 A9 304**	–
ATV 58HU90N4	5,5	*7,5*	ATV 71HU55N4	**VW3 A9 305**	–
ATV 58HD12N4	7,5	*10*	ATV 71HU75N4	**VW3 A9 306**	–
ATV 58HD16N4	11	*15*	ATV 71HD11N4	**VW3 A9 307**	–
ATV 58HD23N4	15	*20*	ATV 71HD15N4	**VW3 A9 308**	–
ATV 58HD28N4	18,5	*25*	ATV 71HD18N4	**VW3 A9 309**	–
ATV 58HD33N4	22	*30*	ATV 71HD22N4	**VW3 A9 310**	–
ATV 58HD46N4	30	*40*	ATV 71HD30N4	**VW3 A9 310**	–
ATV 58HD54N4	37	*50*	ATV 71HD37N4	**VW3 A9 312**	–
ATV 58HD64N4	45	*60*	ATV 71HD45N4	**VW3 A9 312**	–
ATV 58HD79N4	55	*75*	ATV 71HD55N4	**VW3 A9 312**	–
500 V three-phase supply voltage					
ATV 58HU18N4	0,75	*1*	ATV 71HU22Y	**VW3 A9 310**	–
ATV 58HU29N4	1,5	*2*	ATV 71HU22Y	**VW3 A9 310**	–
ATV 58HU41N4	2,2	*3*	ATV 71HU30Y	**VW3 A9 310**	–
ATV 58HU54N4	3	–	ATV 71HU40Y	**VW3 A9 310**	–
ATV 58HU72N4	4	*5*	ATV 71HU55Y	**VW3 A9 310**	–
ATV 58HU90N4	5,5	*7,5*	ATV 71HU75Y	**VW3 A9 310**	–
ATV 58HD12N4	7,5	*10*	ATV 71HD11Y	**VW3 A9 310**	–
ATV 58HD16N4	11	*15*	ATV 71HD15Y	**VW3 A9 310**	–
ATV 58HD23N4	15	*20*	ATV 71HD18Y	**VW3 A9 310**	–
ATV 58HD28N4	18,5	*25*	ATV 71HD22Y	**VW3 A9 310**	–
ATV 58HD33N4	22	*30*	ATV 71HD30Y	**VW3 A9 310**	–
ATV 58HD46N4	30	*40*	ATV 71HD37Y	**VW3 A9 312**	–
ATV 58HD54N4	37	*50*	ATV 71HD45Y	**VW3 A9 312**	–
ATV 58HD64N4	45	*60*	ATV 71HD55Y	**VW3 A9 312**	–
ATV 58HD79N4	55	*75*	ATV 71HD75Y	**VW3 A9 312**	–

Variable speed drives: page 16 | Variants: page 22 | Dialogue: page 32 | Drive/option combinations: page 40

536944

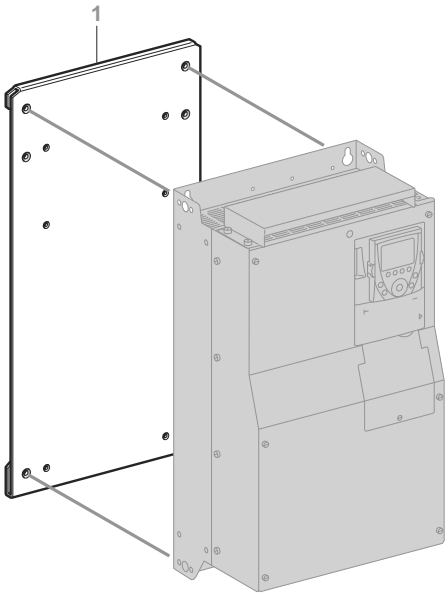

Substitution kit VW3 A9 312

Substitution kit for Altivar 58 or Altivar 58F drives (continued)

Standard torque application (120% Tn)

Old drive	Motor Power		Replaced by	Reference	Weight kg
	kW	*HP*			
200…240 V three-phase supply voltage					
ATV 58HD16M2X	15	*20*	ATV 71HD15M3X	**VW3 A9 309**	–
ATV 58HD23M2X	18,5	*25*	ATV 71HD18M3X	**VW3 A9 310**	–
ATV 58HD28M2X	22	*30*	ATV 71HD22M3X	**VW3 A9 312**	–
ATV 58HD33M2X	30	*40*	ATV 71HD30M3X	**VW3 A9 312**	–
ATV 58HD46M2X	37	*50*	ATV 71HD37M3X	**VW3 A9 312**	–
380…480 V three-phase supply voltage					
ATV 58HD28N4	22	*30*	ATV 71HD22N4	**VW3 A9 310**	–
ATV 58HD33N4	30	*40*	ATV 71HD30N4	**VW3 A9 310**	–
ATV 58HD46N4	37	*50*	ATV 71HD37N4	**VW3 A9 310**	–
ATV 58HD54N4	45	*60*	ATV 71HD45N4	**VW3 A9 312**	–
ATV 58HD64N4	55	*75*	ATV 71HD55N4	**VW3 A9 312**	–
ATV 58HD79N4	75	*100*	ATV 71HD75N4	**VW3 A9 312**	–
500 V three-phase supply voltage					
ATV 58HD28N4	22	*30*	ATV 71HD30Y	**VW3 A9 310**	–
ATV 58HD33N4	30	*40*	ATV 71HD37Y	**VW3 A9 312**	–
ATV 58HD46N4	37	*50*	ATV 71HD45Y	**VW3 A9 312**	–
ATV 58HD54N4	45	*60*	ATV 71HD55Y	**VW3 A9 312**	–
ATV 58HD64N4	55	*75*	ATV 71HD75Y	**VW3 A9 312**	–
ATV 58HD79N4	75	*100*	ATV 71HD90Y	**VW3 A9 312**	–

Variable speed drives
Altivar 71
Option: Dialogue

PF600255



Remote graphic display terminal

Remote graphic display terminal
(this display terminal can be supplied with the drive or ordered separately)

This display terminal is attached to the front of the drive. It includes the integrated terminal for drives ordered without a graphic display terminal (see page 22).
It can be:
- Used remotely in conjunction with the appropriate accessories (see below)
- Connected to several drives using multidrop link components (see page 33)

It is used to:
- Control, adjust and configure the drive
- Display the current values (motor, input/output values, etc.)
- Save and download configurations; 4 configuration files can be saved.

The maximum operating temperature of the terminal is 60°C and it has IP 54 protection.

Description

1 Graphic display unit:
- 8 lines, 240 x 160 pixels
- large digit display that can be read from 5 m away
- bar chart display

2 Assignable function keys F1, F2, F3, F4:
- dialogue functions: direct access, help screens, navigation
- application functions: Local/Remote, preset speed

3 STOP/RESET key: local control of motor stopping/fault clearing
4 RUN key: Local control of motor operation
5 Navigation button:
- Press: Saves the current value (ENT)
- Turn ±: Increases or decreases the value, or goes to the next or previous line

6 FWD/REV key: Reverses the direction of rotation of the motor
7 ESC key: Aborts a value, a parameter or a menu to return to the previous selection

Note: *Keys 3, 4 and 6 can be used to control the drive directly.*

Reference

Description	Item no.	Reference	Weight kg
Remote graphic display terminal	1	**VW3 A1 101**	0.180

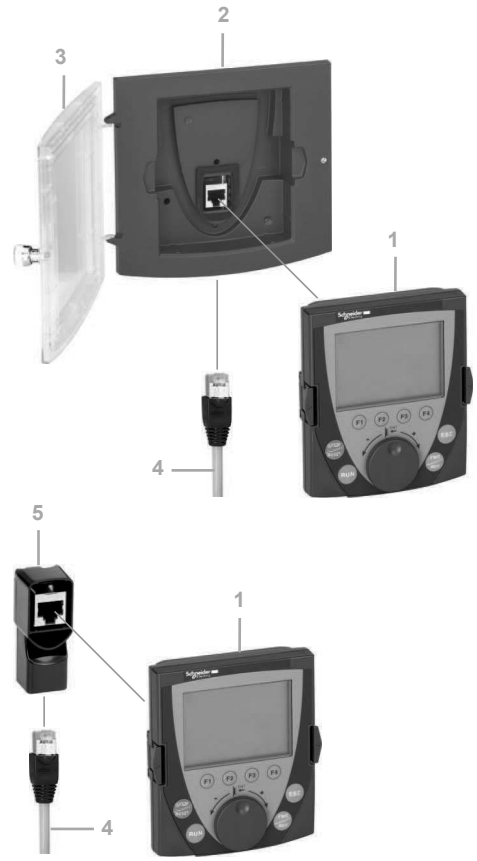

Remote graphic display terminal accessories

Remote graphic display terminal accessories

The following accessories are available:
- A remote mounting kit 2 for mounting on an enclosure door with IP 54 degree of protection, including:
  - All the mechanical fittings
  - Fixing accessories
- A transparent door 3 which attaches to the remote mounting mechanism to achieve IP 65 degree of protection
- A preassembled cordset 4 with two RJ45 connectors for connecting the graphic display terminal to the Altivar 71 drive (1, 3, 5 or 10 metres long)
- A female/female RJ45 adaptor 5 for connecting the graphic display terminal VW3 A1 101 to the remote-mounting cordset VW3 A1 104 R●●●

References

Description	Item no.	Length m	Degree of protection	Reference	Weight kg
Remote mounting kit Order with remote-mounting cordset VW3 A1 104 R●●●	2	–	IP 54	**VW3 A1 102**	0.150
Door for remote mounting kit	3	–	IP 65	**VW3 A1 103**	0.040
Preassembled remote-mounting cordsets with 2 x RJ45 connectors	4	1	–	**VW3 A1 104 R10**	0.050
	4	3	–	**VW3 A1 104 R30**	0.150
	4	5	–	**VW3 A1 104 R50**	0.250
	4	10	–	**VW3 A1 104 R100**	0.500
Female/female RJ45 adaptor	5	–	–	**VW3 A1 105**	0.010

Variable speed drives
Altivar 71
Option: Dialogue

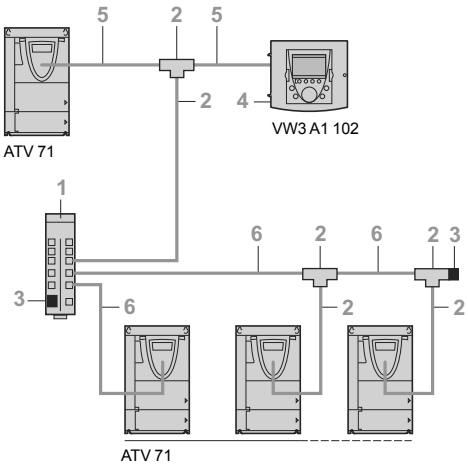

Example of connection via multidrop link

Multidrop connection accessories

These accessories enable a graphic display terminal to be connected to several drives via a multidrop link. This multidrop link is connected to the Modbus terminal port on the front of the drive.

Connection accessories

Description		Item no.	Order in lots of	Unit reference	Weight kg
Modbus splitter box 10 RJ45 connectors and 1 screw terminal		1	–	**LU9 GC3**	0.500
Modbus T-junction boxes	With integrated cable (0.3 m)	2	–	**VW3 A8 306 TF03**	–
	With integrated cable (1 m)	2	–	**VW3 A8 306 TF10**	–
Modbus line terminator	For RJ45 connector R = 120 Ω, C = 1 nf	3	2	**VW3 A8 306 RC**	0.010
Remote mounting kit	For graphic display terminal VW3 A1 101	4	–	**VW3 A1 102**	0.150

Cordsets (preassembled with 2 RJ45 connectors)

Used for	Item no.	Length m	Reference	Weight kg
For remote operation of the Altivar 71 and the graphic display terminal VW3 A1 101	5	1	**VW3 A1 104 R10**	0.050
		3	**VW3 A1 104 R30**	0.150
		5	**VW3 A1 104 R50**	0.250
		10	**VW3 A1 104 R100**	0.500
Modbus serial link	6	0.3	**VW3 A8 306 R03**	0.025
		1	**VW3 A8 306 R10**	0.060
		3	**VW3 A8 306 R30**	0.130

Variable speed drives
Altivar 71
Option: Configuration tools



Configuration with SoMove Mobile software for mobile phones via Bluetooth®



SoMove setup software with Modbus-Bluetooth® adaptor for PC

SoMove Mobile software for mobile phones *(1)*

SoMove Mobile software converts any compatible mobile phone *(1)* into a remote graphic display terminal, offering an identical Human-Machine Interface.

Particularly suitable for on-site or remote maintenance operations, SoMove Mobile software can be used to print out and save configurations, import them from a PC and export them to a PC or a drive equipped with the Modbus-Bluetooth® adaptor (TCSW AAC13FB) via the Bluetooth® wireless link.

SoMove Mobile software and drive configuration files can be downloaded from our website www.schneider-electric.com.

Reference

Description	For drives	Reference	Weight kg
SoMove Mobile software for mobile phones *(1)*	ATV 71●●●●●●	–	–

SoMove setup software

Presentation

SoMove setup software for PC is used to configure, adjust and debug using the Oscilloscope function, as well as for maintenance, like all Schneider Electric drives and starters.

The software can use a direct USB/RJ45 cable link or communicate via a Bluetooth® wireless link with the drive equipped with the Modbus-Bluetooth® adaptor (TCSW AAC13FB).

It is compatible with Altivar 71 drives from software version 1.6 upwards.

For presentation, description and references, see page 36.

(1) SoMove Mobile software requires a mobile phone with minimum features; please consult our website www.schneider-electric.com.



Configuration with the Multi-Loader tool connected to the Altivar 71 drive

Simple Loader configuration tool

The Simple Loader tool enables one powered-up drive's configuration to be duplicated on another powered-up drive. It is connected to the drive's RJ45 communication port.

Reference

Description	For drives	Reference	Weight kg
Simple Loader configuration tool The tool is supplied with a preassembled cordset with 2 RJ45 connectors.	ATV 71●●●●●●	**VW3 A8 120**	–

Multi-Loader configuration tool

The Multi-Loader tool enables a number of configurations from a PC or drive to be copied and duplicated on another drive; the Altivar 71 drives do not need to be powered up.

Reference

Description	For drives	Reference	Weight kg
Multi-Loader configuration tool Includes: - 1 preassembled cordset with 2 RJ45 connectors - 1 preassembled cordset with a USB type A connector and a USB Mini-B type connector - 1 x SD memory card - 1 x female/female RJ45 adaptor - 4 AA/LR6 1.5 V batteries - 1 anti-shock protection - 1 carrying handle	ATV 71●●●●●●	**VW3 A8 121**	–

SoMove setup software

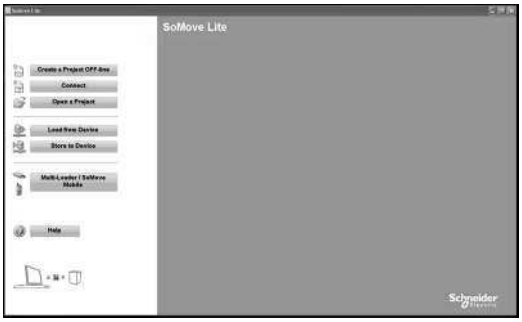

SoMove start page



Example of connecting SoMove software to an ATV 12 drive

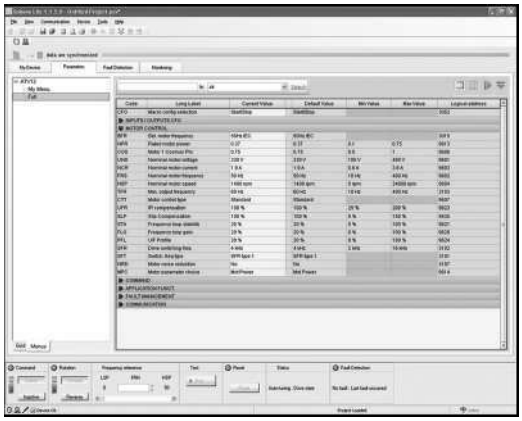

SoMove control panel

Presentation

SoMove is user-friendly setup software for PC designed for configuring the following Schneider Electric motor control devices:
- ATV 12, ATV 312, ATV 31, ATV 32, ATV 61 and ATV 71 drives
- ATS 22 starters
- TeSys U starter-controllers
- TeSys T motor management system
- Lexium 32 servo drives

SoMove software incorporates various functions for the device setup phases, such as:
- Configuration preparation
- Start-up
- Maintenance

To facilitate setup and maintenance, SoMove software can use a direct USB/RJ45 cable link or a Bluetooth® wireless link.
SoMove software is also compatible with the Multi-Loader configuration tool and SoMove Mobile software for mobile phones.
These tools can save a significant amount of time when loading, duplicating or editing configurations on a device.

SoMove software and all the DTMs (Device Type Managers) associated with the devices can be downloaded from our website www.schneider-electric.com.

Functions

Configuration preparation in disconnected mode

SoMove software has a genuine disconnected mode which provides access to all the device parameters. This mode can be used to generate the device configuration. The configuration can be saved, printed and exported to office automation software.

SoMove software also checks the consistency of the parameters, validating the configurations created in disconnected mode.

A large number of functions are available in disconnected mode, in particular:
- The device configuration software wizard
- The configuration comparison function
- Saving, copying, printing and creating configuration files for export to Multi-Loader, SoMove Mobile or Microsoft Excel® tools, and sending configurations by e-mail

Setup

When the PC is connected to the device, SoMove software can be used for:
- Transferring the generated configuration onto the device
- Adjustment and monitoring, which includes such functions as:
  - The oscilloscope
  - Display of communication parameters
- Easy control via the control panel user interface
- Saving the final configuration

Maintenance

In order to simplify maintenance operations, SoMove software can be used to:
- Compare the configuration of a device currently being used with a configuration saved on the PC
- Transfer a configuration to a device
- Compare oscilloscope curves
- Save oscilloscope curves and faults

Variable speed drives: page 16
Options: page 52
Drive/option combinations: page 40

SoMove setup software

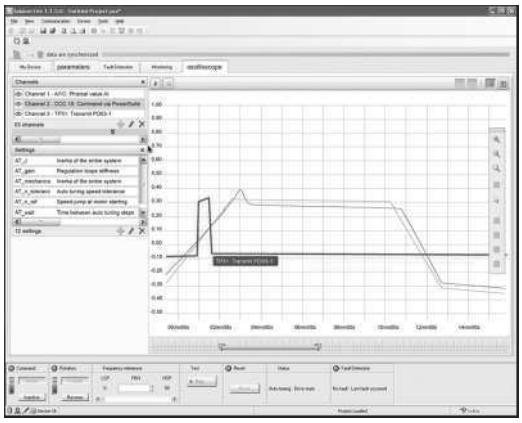

SoMove oscilloscope function

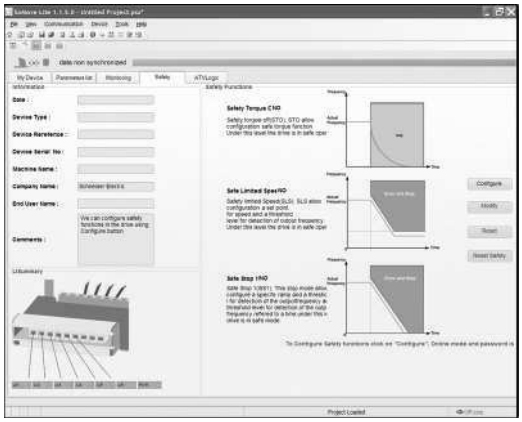

SoMove Safety function

Functions (continued)

User interface

SoMove software provides fast, direct access to all information on the device via five tabs:

■ My Device: Displays all the device information (type, reference, software versions, option cards, etc.)

■ Parameters: Displays all the device adjustment parameters, shown in a table or in the form of diagrams

■ Faults: Displays a list of the faults that may be encountered with the device, the fault log and any current faults or alarms

■ Monitoring: Provides a realtime display of the device status, its I/O and all the monitoring parameters. It is possible to create your own control panel by selecting your parameters and how they are to be represented.

■ Oscilloscope: Provides a high-speed oscilloscope (for recording traces in the device) or low-speed oscilloscope (for recording traces in the software for devices that do not have an integrated oscilloscope)

SoMove's user interface automatically adapts to the specific configured device by offering additional tabs:

■ Safety: For configuring the Safety functions on ATV 32 variable speed drives and Lexium 32 servo drives. It can also be used to:

□ Display the I/O

□ Compile and print a report

■ ATVLogic: For accessing the ATV 32 drive's programmable function blocks. It can also be used to:

□ Develop a program and transfer it to the drive

□ Display and debug the program already on the drive

■ Auto-tuning: For accessing the servo control settings for the three different operating modes of the Lexium 32 servo drive's auto-tuning function:

□ Automatic mode for quick setup, designed for simple applications

□ Semi-automatic mode for quick setup, with the option of optimizing the servo drive/servo motor combination (access to the mechanical and dynamic behaviour parameters)

□ Expert mode for optimizing the adjustment parameters, designed for complex applications

Connections

Modbus serial link

The PC running SoMove software can be connected directly via the RJ45 connector on the device and the USB port on the PC using the USB/RJ45 cable.

See the product references on page 38.

Bluetooth® wireless link

SoMove software can communicate via Bluetooth® wireless link with any Bluetooth® enabled device.

If the device is not Bluetooth® enabled, use the Modbus-Bluetooth® adaptor. This adaptor is connected to the terminal port or the Modbus network port on the device. It has a 20 m range (class 2).

If the PC does not have Bluetooth® technology, use the USB-Bluetooth® adaptor.

See the product references on page 38.

SoMove setup software



SoMove setup software

PF100898C



TCSW AAC13FB: Bluetooth® adaptor

References

Description	Reference	Weight kg
SoMove Lite setup software Includes: ■ SoMove setup software for PC in English, French, German, Italian, Spanish and Chinese ■ DTMs (Device Type Managers) and technical documentation for variable speed drives, starters and servo motors	*(1)*	–
USB/RJ45 cable Used to connect a PC to the device. This cable is 2.5 m long and has a USB connector (PC end) and an RJ45 connector (device end).	**TCSM CNAM 3M002P**	–
Modbus/Uni-Telway-Bluetooth® adaptor Used to enable any non-Bluetooth® device to communicate via Bluetooth® wireless link *(2)*. Includes: ■ 1 Bluetooth® adaptor (range 20 m, class 2) with an RJ45 connector ■ For SoMove: 1 x 0.1 m cordset with 2 x RJ45 connectors ■ For TwidoSuite: 1 x 0.1 m cordset with 1 RJ45 connector and 1 mini DIN connector	**TCSW AAC13FB**	0.032
USB-Bluetooth® adaptor for PC Used to enable any non-Bluetooth® PC to communicate via Bluetooth® wireless link *(3)*. It connects to a USB port on the PC. Range 10 m, class 2	**VW3 A8 115**	0.290

(1) Available on our website www.schneider-electric.com.
(2) Required for the following devices:
- ATV 12, ATV 312, ATV 31, ATV 61 and ATV 71 drives
- ATS 22 starters
- TeSys U starter-controllers
- TeSys T motor management system
- Lexium 32 servo drives
(3) Check the manufacturer's specification.

Variable speed drives: page 16
Options: page 52
Drive/option combinations: page 40

SoMove setup software

Compatibility of SoMove software with specific devices

Device	Range	Version of software on the device
Variable speed drive	ATV 12, ATV 312, ATV32	≥ 1.0
	ATV 31	≥ 1.1
	ATV 61, ATV 71	≥ 1.6
Starter	ATS 22	≥ 1.0
Starter-controller	TeSys U	≥ 1.0
Motor management system	TeSys T	≥ 1.0
Servo drive	Lexium 32	≥ 1.0

Environments

SoMove operates in the following PC environments and configurations:
- Microsoft Windows® 7 Professional *(1)*
- Microsoft Windows® XP Professional SP3
- Microsoft Windows® Vista Business SP2
- Pentium IV (or equivalent), 1 GHz, hard disk with 1 GB available space, 1 GB of RAM (minimum configuration)

(1) Please contact our Customer Care Centre.

Variable speed drives: page 16
Options: page 52
Drive/option combinations: page 40

Table showing possible combinations of ATV 71H●●●M3 and ATV 71H●●●M3X drive options *(1)*

Motor		Drive	Options				
			DC choke	Line choke	Additional EMC input filter	Motor choke	IP 20 kit for motor choke
kW	***HP***						
Single-phase supply voltage: 200…240 V 50/60 Hz							
0.37	*0.5*	**ATV 71H075M3**	–	–	VW3 A4 401	VW3 A5 101	–
0.75	*1*	**ATV 71HU15M3**	–	–	VW3 A4 401	VW3 A5 101	–
1.5	*2*	**ATV 71HU22M3**	–	–	VW3 A4 402	VW3 A5 101	–
2.2	*3*	**ATV 71HU30M3**	–	–	VW3 A4 402	VW3 A5 102, 103	–
3	–	**ATV 71HU40M3**	–	VW3 A58 501	VW3 A4 402	VW3 A5 102, 103	–
4	*5*	**ATV 71HU55M3**	–	VW3 A58 502	VW3 A4 403	VW3 A5 102, 103	–
5.5	*7.5*	**ATV 71HU75M3**	–	VW3 A58 502	VW3 A4 404	VW3 A5 102, 103	–
Three-phase supply voltage: 200…240 V 50/60 Hz							
0.37	*0.5*	**ATV 71H037M3**	VW3 A4 501	VW3 A4 551	VW3 A4 401	VW3 A5 101	–
0.75	*1*	**ATV 71H075M3**	VW3 A4 503	VW3 A4 551	VW3 A4 401	VW3 A5 101	–
1.5	*2*	**ATV 71HU15M3**	VW3 A4 505	VW3 A4 552	VW3 A4 401	VW3 A5 101	–
2.2	*3*	**ATV 71HU22M3**	VW3 A4 506	VW3 A4 552	VW3 A4 402	VW3 A5 101	–
3	–	**ATV 71HU30M3**	VW3 A4 507	VW3 A4 553	VW3 A4 402	VW3 A5 102, 103	–
4	*5*	**ATV 71HU40M3**	VW3 A4 508	VW3 A4 554	VW3 A4 402	VW3 A5 102, 103	–
5.5	*7.5*	**ATV 71HU55M3**	VW3 A4 508	VW3 A4 554	VW3 A4 403	VW3 A5 102, 103	–
7.5	*10*	**ATV 71HU75M3**	VW3 A4 509	VW3 A4 555	VW3 A4 404	VW3 A5 102, 103	–
11	*15*	**ATV 71HD11M3X**	VW3 A4 510	VW3 A4 555	VW3 A4 405	VW3 A5 103	–
15	*20*	**ATV 71HD15M3X**	VW3 A4 510	VW3 A4 556	VW3 A4 405	VW3 A5 103	–
18.5	*25*	**ATV 71HD18M3X**	VW3 A4 511	VW3 A4 557	VW3 A4 406	VW3 A5 103	–
22	*30*	**ATV 71HD22M3X**	VW3 A4 511	VW3 A4 557	VW3 A4 406	VW3 A5 103	–
30	*40*	**ATV 71HD30M3X**	VW3 A4 512	VW3 A4 557	VW3 A4 408	VW3 A5 104	VW3 A9 612
37	*50*	**ATV 71HD37M3X**	VW3 A4 512	VW3 A4 557	VW3 A4 408	VW3 A5 104	VW3 A9 612
45	*60*	**ATV 71HD45M3X**	VW3 A4 512	VW3 A4 557	VW3 A4 408	VW3 A5 104	VW3 A9 612
55	*75*	**ATV 71HD55M3X**	–	VW3 A4 562	VW3 A4 410	VW3 A5 105	VW3 A9 612
75	*100*	**ATV 71HD75M3X**	–	VW3 A4 563	VW3 A4 410	VW3 A5 105	VW3 A9 612
Page		16	77	79	85	88	89

(1) The options available for ATV 71H●●●M3 and H●●●M3X drives are also valid, at the same rating, for ATV 71H●●●M3383 and ATV 71H●●●M3X383 drives.

Sinus filter	Braking resistor	Hoist resistor	Flush-mounting kit (inside dust and damp proof enclosure)	UL Type 1 conformity kit (outside enclosure)	IP 21 or IP 31 conformity kit (outside enclosure)	Control card fan kit	DNV kit
VW3 A5 201	VW3 A7 701	VW3 A7 801	VW3 A9 501	VW3 A9 201	VW3 A9 101	–	–
VW3 A5 201	VW3 A7 702	VW3 A7 802	VW3 A9 501	VW3 A9 201	VW3 A9 101	–	–
VW3 A5 202	VW3 A7 702	VW3 A7 803	VW3 A9 502	VW3 A9 202	VW3 A9 102	–	–
VW3 A5 202	VW3 A7 703	VW3 A7 803	VW3 A9 502	VW3 A9 202	VW3 A9 102	–	–
VW3 A5 203	VW3 A7 703	VW3 A7 803	VW3 A9 502	VW3 A9 202	VW3 A9 102	–	–
VW3 A5 203	VW3 A7 704	VW3 A7 804	VW3 A9 503	VW3 A9 203	VW3 A9 103	–	–
VW3 A5 203	VW3 A7 704	VW3 A7 804	VW3 A9 504	VW3 A9 204	VW3 A9 104	–	–
VW3 A5 201	VW3 A7 701	VW3 A7 801	VW3 A9 501	VW3 A9 201	VW3 A9 101	–	VW3 A9 621
VW3 A5 201	VW3 A7 701	VW3 A7 801	VW3 A9 501	VW3 A9 201	VW3 A9 101	–	VW3 A9 621
VW3 A5 201	VW3 A7 702	VW3 A7 802	VW3 A9 501	VW3 A9 201	VW3 A9 101	–	VW3 A9 621
VW3 A5 202	VW3 A7 702	VW3 A7 803	VW3 A9 502	VW3 A9 202	VW3 A9 102	–	VW3 A9 622
VW3 A5 202	VW3 A7 703	VW3 A7 803	VW3 A9 502	VW3 A9 202	VW3 A9 102	–	VW3 A9 622
VW3 A5 203	VW3 A7 703	VW3 A7 803	VW3 A9 502	VW3 A9 202	VW3 A9 102	–	VW3 A9 622
VW3 A5 203	VW3 A7 704	VW3 A7 804	VW3 A9 503	VW3 A9 203	VW3 A9 103	–	VW3 A9 623
VW3 A5 203	VW3 A7 704	VW3 A7 804	VW3 A9 504	VW3 A9 204	VW3 A9 104	–	VW3 A9 624
VW3 A5 204	VW3 A7 705	VW3 A7 805	VW3 A9 505	VW3 A9 205	VW3 A9 105	–	VW3 A9 625
VW3 A5 204	VW3 A7 706	VW3 A7 805	VW3 A9 505	VW3 A9 205	VW3 A9 105	–	VW3 A9 625
VW3 A5 205	VW3 A7 707	VW3 A7 806	VW3 A9 506	VW3 A9 206	VW3 A9 106	VW3 A9 404	VW3 A9 626
VW3 A5 205	VW3 A7 707	VW3 A7 807	VW3 A9 506	VW3 A9 206	VW3 A9 106	VW3 A9 404	VW3 A9 626
VW3 A5 206	VW3 A7 708	VW3 A7 807	VW3 A9 508	VW3 A9 217	VW3 A9 117	VW3 A9 406	VW3 A9 628
VW3 A5 206	VW3 A7 709	VW3 A7 808	VW3 A9 508	VW3 A9 217	VW3 A9 117	VW3 A9 406	VW3 A9 628
VW3 A5 206	VW3 A7 709	VW3 A7 808	VW3 A9 508	VW3 A9 217	VW3 A9 117	VW3 A9 406	VW3 A9 628
VW3 A5 208	VW3 A7 713	VW3 A7 809	VW3 A9 510	VW3 A9 209	VW3 A9 109	–	VW3 A9 629 *(1)*
VW3 A5 208	VW3 A7 714	VW3 A7 810	VW3 A9 511	VW3 A9 210	VW3 A9 110	–	VW3 A9 631 *(1)*
91	65	68	26	28	29	25	23

(1) If using the DNV kit, do not mount the DC choke supplied as standard with the drive.

Table showing possible combinations of ATV 71H●●●N4 drive options

Motor		Drive	Options					
			DC choke	Line choke	Passive filter	Additional EMC input filter	Motor choke	IP 20 kit for motor choke
kW	***HP***							
Three-phase supply voltage: 380…480 V 50/60 Hz								
0.75	*1*	**ATV 71H075N4**	VW3 A4 501	VW3 A4 551	VW3 A4 6●1	VW3 A4 401	VW3 A5 101, 102, 103	–
1.5	*2*	**ATV 71HU15N4**	VW3 A4 502	VW3 A4 551	VW3 A4 6●1	VW3 A4 401	VW3 A5 101, 102, 103	–
2.2	*3*	**ATV 71HU22N4**	VW3 A4 503	VW3 A4 552	VW3 A4 6●1	VW3 A4 401	VW3 A5 101, 102, 103	–
3	–	**ATV 71HU30N4**	VW3 A4 503	VW3 A4 552	VW3 A4 6●1	VW3 A4 402	VW3 A5 101, 102, 103	–
4	*5*	**ATV 71HU40N4**	VW3 A4 504	VW3 A4 552	VW3 A4 6●2	VW3 A4 402	VW3 A5 101, 102, 103	–
5.5	*7.5*	**ATV 71HU55N4**	VW3 A4 505	VW3 A4 553	VW3 A4 6●2	VW3 A4 403	VW3 A5 102, 103, 104	VW3 A9 612
7.5	*10*	**ATV 71HU75N4**	VW3 A4 506	VW3 A4 553	VW3 A4 6●3	VW3 A4 403	VW3 A5 102, 103, 104	VW3 A9 612
11	*15*	**ATV 71HD11N4**	VW3 A4 507	VW3 A4 554	VW3 A4 6●3	VW3 A4 404	VW3 A5 102, 103, 104	VW3 A9 612
15	*20*	**ATV 71HD15N4**	VW3 A4 508	VW3 A4 554	VW3 A4 6●4	VW3 A4 405	VW3 A5 102, 103, 104	VW3 A9 612
18.5	*25*	**ATV 71HD18N4**	VW3 A4 508	VW3 A4 555	VW3 A4 6●5	VW3 A4 405	VW3 A5 102, 103, 104	VW3 A9 612
22	*30*	**ATV 71HD22N4**	VW3 A4 510	VW3 A4 555	VW3 A4 6●6	VW3 A4 406	VW3 A5 103, 104	VW3 A9 612
30	*40*	**ATV 71HD30N4**	VW3 A4 510	VW3 A4 556	VW3 A4 6●7	VW3 A4 407	VW3 A5 103, 104	VW3 A9 612
37	*50*	**ATV 71HD37N4**	VW3 A4 510	VW3 A4 556	VW3 A4 6●7	VW3 A4 407	VW3 A5 103, 104	VW3 A9 612
45	*60*	**ATV 71HD45N4**	VW3 A4 511	VW3 A4 556	VW3 A4 6●8	VW3 A4 408	VW3 A5 104	VW3 A9 612
55	*75*	**ATV 71HD55N4**	VW3 A4 511	VW3 A4 556	VW3 A4 6●8	VW3 A4 408	VW3 A5 104	VW3 A9 612
75	*100*	**ATV 71HD75N4**	VW3 A4 511	VW3 A4 558	VW3 A4 6●9	VW3 A4 408	VW3 A5 104	VW3 A9 612
90	*125*	**ATV 71HD90N4**	–	VW3 A4 558	VW3 A4 6●9	VW3 A4 410	VW3 A5 104	VW3 A9 612
110	*150*	**ATV 71HC11N4**	–	VW3 A4 559	VW3 A4 6●0	VW3 A4 410	VW3 A5 105	VW3 A9 612
132	*200*	**ATV 71HC13N4**	–	VW3 A4 560	VW3 A4 6●1	VW3 A4 410	VW3 A5 105	VW3 A9 612
160	*250*	**ATV 71HC16N4**	–	VW3 A4 561	VW3 A4 6●2	VW3 A4 411	VW3 A5 106	VW3 A9 613
200	*300*	**ATV 71HC20N4**	–	VW3 A4 569	VW3 A4 6●3	VW3 A4 411	VW3 A5 106	VW3 A9 613
220	*350*	**ATV 71HC25N4**	–	VW3 A4 562	VW3 A4 6●3	VW3 A4 411	VW3 A5 106	VW3 A9 613
250	*400*	**ATV 71HC25N4**	–	VW3 A4 564	VW3 A4 6●1	VW3 A4 411	VW3 A5 107	VW3 A9 613
280	*450*	**ATV 71HC28N4**	–	VW3 A4 564	VW3 A4 6●2	VW3 A4 411	VW3 A5 107	VW3 A9 613
315	*500*	**ATV 71HC31N4**	–	VW3 A4 565	VW3 A4 6●2	VW3 A4 412	VW3 A5 107	VW3 A9 613
355	–	**ATV 71HC40N4**	–	VW3 A4 569	VW3 A4 6●2	VW3 A4 412	VW3 A5 107	VW3 A9 613
400	*600*	**ATV 71HC40N4**	–	VW3 A4 569	VW3 A4 6●9	VW3 A4 412	VW3 A5 108	VW3 A9 613
500	*700*	**ATV 71HC50N4**	–	VW3 A4 564	VW3 A4 6●2	VW3 A4 413	VW3 A5 108	VW3 A9 613
Page		17	77	79	82	85	88	89

Table showing possible combinations of ATV 71Q●●●N4 drive options

Motor		Drive	Options					
			DC choke	Line choke	Passive filter	Additional EMC input filter	Motor choke	IP 20 kit for motor choke
kW	***HP***							
Supply voltage: 380…480 V 50/60 Hz								
90	*125*	**ATV 71QD90N4**	–	VW3 A4 559	VW3 A4 6●9	VW3 A4 410	VW3 A5 104	VW3 A9 612
110	*150*	**ATV 71QC11N4**	–	VW3 A4 560	VW3 A4 6●0	VW3 A4 410	VW3 A5 105	VW3 A9 612
132	*200*	**ATV 71QC13N4**	–	VW3 A4 568	VW3 A4 6●1	VW3 A4 410	VW3 A5 105	VW3 A9 612
160	*250*	**ATV 71QC16N4**	–	VW3 A4 561	VW3 A4 6●2	VW3 A4 411	VW3 A5 106	VW3 A9 613
200	*300*	**ATV 71QC20N4**	–	VW3 A4 569	VW3 A4 6●3	VW3 A4 411	VW3 A5 106	VW3 A9 613
220	*350*	**ATV 71QC25N4**	–	VW3 A4 564	VW3 A4 6●3	VW3 A4 411	VW3 A5 106	VW3 A9 613
250	*400*	**ATV 71QC25N4**	–	VW3 A4 564	VW3 A4 6●1	VW3 A4 411	VW3 A5 107	VW3 A9 613
315	*500*	**ATV 71QC31N4**	–	VW3 A4 561	VW3 A4 6●2	VW3 A4 412	VW3 A5 107	VW3 A9 613
355	–	**ATV 71QC40N4**	–	VW3 A4 563	VW3 A4 6●2	VW3 A4 412	VW3 A5 107	VW3 A9 613
400	*600*	**ATV 71QC40N4**	–	VW3 A4 563	VW3 A4 6●9	VW3 A4 412	VW3 A5 108	VW3 A9 613
500	*700*	**ATV 71QC50N4**	–	VW3 A4 573	VW3 A4 6●2	VW3 A4 413	VW3 A5 108	VW3 A9 613
Page		18	–	79	82	85	88	89

Sinus filter	Resistance braking unit	Braking resistor	Hoist resistor	Flush-mounting kit (inside dust and damp proof enclosure)	UL Type 1 conformity kit (outside enclosure)	IP 21 or IP 31 conformity kit (outside enclosure)	Control card fan kit	DNV kit *(1)*
–	–	VW3 A7 701	VW3 A7 801	VW3 A9 501	VW3 A9 201	VW3 A9 101	–	VW3 A9 621
VW3 A5 201	–	VW3 A7 701	VW3 A7 801	VW3 A9 501	VW3 A9 201	VW3 A9 101	–	VW3 A9 621
VW3 A5 201	–	VW3 A7 701	VW3 A7 801	VW3 A9 501	VW3 A9 201	VW3 A9 101	–	VW3 A9 621
VW3 A5 201	–	VW3 A7 701	VW3 A7 802	VW3 A9 502	VW3 A9 202	VW3 A9 102	–	VW3 A9 622
VW3 A5 201	–	VW3 A7 701	VW3 A7 802	VW3 A9 502	VW3 A9 202	VW3 A9 102	–	VW3 A9 622
VW3 A5 202	–	VW3 A7 702	VW3 A7 802	VW3 A9 503	VW3 A9 203	VW3 A9 103	–	VW3 A9 623
VW3 A5 203	–	VW3 A7 702	VW3 A7 803	VW3 A9 503	VW3 A9 203	VW3 A9 103	–	VW3 A9 623
VW3 A5 203	–	VW3 A7 703	VW3 A7 803	VW3 A9 504	VW3 A9 204	VW3 A9 104	–	VW3 A9 624
VW3 A5 203	–	VW3 A7 703	VW3 A7 804	VW3 A9 505	VW3 A9 205	VW3 A9 105	–	VW3 A9 625
VW3 A5 204	–	VW3 A7 704	VW3 A7 804	VW3 A9 505	VW3 A9 205	VW3 A9 105	–	VW3 A9 625
VW3 A5 204	–	VW3 A7 704	VW3 A7 804	VW3 A9 506	VW3 A9 206	VW3 A9 106	VW3 A9 404	VW3 A9 626
VW3 A5 204	–	VW3 A7 704	VW3 A7 804	VW3 A9 507	VW3 A9 207	VW3 A9 107	VW3 A9 405	VW3 A9 627
VW3 A5 205	–	VW3 A7 705	VW3 A7 805	VW3 A9 507	VW3 A9 207	VW3 A9 107	VW3 A9 405	VW3 A9 627
VW3 A5 205	–	VW3 A7 707	VW3 A7 805	VW3 A9 509	VW3 A9 208	VW3 A9 108	VW3 A9 407	VW3 A9 628
VW3 A5 206	–	VW3 A7 707	VW3 A7 805	VW3 A9 509	VW3 A9 208	VW3 A9 108	VW3 A9 407	VW3 A9 628
VW3 A5 206	–	VW3 A7 707	VW3 A7 806	VW3 A9 509	VW3 A9 208	VW3 A9 108	VW3 A9 407	VW3 A9 628
VW3 A5 207	–	VW3 A7 710	VW3 A7 811	VW3 A9 510	VW3 A9 209	VW3 A9 109	–	VW3 A9 629
VW3 A5 207	–	VW3 A7 711	VW3 A7 812	VW3 A9 511	VW3 A9 210	VW3 A9 110	–	VW3 A9 631
VW3 A5 208	–	VW3 A7 711	VW3 A7 812	VW3 A9 512	VW3 A9 211	VW3 A9 111	–	VW3 A9 633
VW3 A5 208	–	VW3 A7 712	VW3 A7 813	VW3 A9 513	VW3 A9 212	VW3 A9 112	–	VW3 A9 635
VW3 A5 209	VW3 A7 101	VW3 A7 715	VW3 A7 814	VW3 A9 514, 515	VW3 A9 213, 214	VW3 A9 113, 114	–	VW3 A9 637
VW3 A5 209	VW3 A7 101	VW3 A7 716	VW3 A7 815	VW3 A9 514, 515	VW3 A9 213, 214	VW3 A9 113, 114	–	VW3 A9 638
VW3 A5 210	VW3 A7 101	VW3 A7 716	VW3 A7 815	VW3 A9 514, 515	VW3 A9 213, 214	VW3 A9 113, 114	–	VW3 A9 638
VW3 A5 210	VW3 A7 101	VW3 A7 716	VW3 A7 815	VW3 A9 514, 515	VW3 A9 213, 214	VW3 A9 113, 114	–	VW3 A9 638
VW3 A5 210	VW3 A7 102	VW3 A7 717	VW3 A7 816	–	–	VW3 A9 115	–	VW3 A9 639
VW3 A5 210	VW3 A7 102	VW3 A7 717	VW3 A7 816	–	–	VW3 A9 115	–	VW3 A9 640
VW3 A5 211	VW3 A7 102	VW3 A7 717	VW3 A7 816	–	–	VW3 A9 115	–	VW3 A9 640
VW3 A5 211	VW3 A7 102	VW3 A7 718	VW3 A7 817	–	–	VW3 A9 116	–	VW3 A9 641
91	64	66	69	26	28	29	25	23

Sinus filter	Resistance braking unit	Braking resistor	Hoist resistor	Flush-mounting kit (inside dust and damp proof enclosure)	UL Type 1 conformity kit (outside enclosure)	IP 21 or IP 31 conformity kit (outside enclosure)	Control card fan kit	DNV kit
VW3 A5 207	–	VW3 A7 710	VW3 A7 811	–	–	–	–	–
VW3 A5 207	–	VW3 A7 711	VW3 A7 812	–	–	–	–	–
VW3 A5 208	–	VW3 A7 711	VW3 A7 812	–	–	–	–	–
VW3 A5 208	VW3 A7 101	VW3 A7 712	VW3 A7 813	–	–	–	–	–
VW3 A5 209	VW3 A7 101	VW3 A7 715	VW3 A7 814	–	–	–	–	–
VW3 A5 209	VW3 A7 101	VW3 A7 716	VW3 A7 815	–	–	–	–	–
VW3 A5 210	VW3 A7 101	VW3 A7 716	VW3 A7 815	–	–	–	–	–
VW3 A5 210	VW3 A7 102	VW3 A7 717	VW3 A7 816	–	–	–	–	–
VW3 A5 210	VW3 A7 102	VW3 A7 717	VW3 A7 816	–	–	–	–	–
VW3 A5 211	VW3 A7 102	VW3 A7 717	VW3 A7 816	–	–	–	–	–
VW3 A5 211	VW3 A7 102	VW3 A7 718	VW3 A7 817	–	–	–	–	–
91	64	66	69	–	–	–	–	–

(1) For DNV kits VW3 A9 629…641, order a drive without a DC choke, by adding a D at the end of the reference.
E.g. ATV 71HD90N4 becomes ATV 71HD90N4D (see page 22).

Table showing possible combinations of ATV 71W●●●N4 drive options

Motor		Drive	Options			
			DC choke	Line choke	Passive filter	Additional EMC filter
kW	***HP***					
Three-phase supply voltage: 380…480 V 50/60 Hz						
0.75	*1*	**ATV 71W075N4**	VW3 A4 501	VW3 A4 551	VW3 A4 6●1	VW3 A4 401
1.5	*2*	**ATV 71WU15N4**	VW3 A4 502	VW3 A4 551	VW3 A4 6●1	VW3 A4 401
2.2	*3*	**ATV 71WU22N4**	VW3 A4 503	VW3 A4 552	VW3 A4 6●1	VW3 A4 401
3	–	**ATV 71WU30N4**	VW3 A4 503	VW3 A4 552	VW3 A4 6●1	VW3 A4 402
4	*5*	**ATV 71WU40N4**	VW3 A4 504	VW3 A4 552	VW3 A4 6●2	VW3 A4 402
5.5	*7.5*	**ATV 71WU55N4**	VW3 A4 505	VW3 A4 553	VW3 A4 6●2	VW3 A4 403
7.5	*10*	**ATV 71WU75N4**	VW3 A4 506	VW3 A4 553	VW3 A4 6●3	VW3 A4 403
11	*15*	**ATV 71WD11N4**	VW3 A4 507	VW3 A4 554	VW3 A4 6●3	VW3 A4 404
15	*20*	**ATV 71WD15N4**	VW3 A4 508	VW3 A4 554	VW3 A4 6●4	VW3 A4 405
18.5	*25*	**ATV 71WD18N4**	VW3 A4 508	VW3 A4 555	VW3 A4 6●5	VW3 A4 405
22	*30*	**ATV 71WD22N4**	VW3 A4 510	VW3 A4 555	VW3 A4 6●6	VW3 A4 406
30	*40*	**ATV 71WD30N4**	VW3 A4 510	VW3 A4 556	VW3 A4 6●7	VW3 A4 407
37	*50*	**ATV 71WD37N4**	VW3 A4 510	VW3 A4 556	VW3 A4 6●7	VW3 A4 407
45	*60*	**ATV 71WD45N4**	VW3 A4 511	VW3 A4 556	VW3 A4 6●8	VW3 A4 408
55	*75*	**ATV 71WD55N4**	VW3 A4 511	VW3 A4 556	VW3 A4 6●8	VW3 A4 408
75	*100*	**ATV 71WD75N4**	VW3 A4 511	VW3 A4 558	VW3 A4 6●9	VW3 A4 408
Page		19	77	79	82	85

Motor choke	IP 20 kit for motor choke	Sinus filter	Braking resistor	Hoist resistor
VW3 A5 101, 102, 103	–	–	VW3 A7 701	VW3 A7 801
VW3 A5 101, 102, 103	–	VW3 A5 201	VW3 A7 701	VW3 A7 801
VW3 A5 101, 102, 103	–	VW3 A5 201	VW3 A7 701	VW3 A7 801
VW3 A5 101, 102, 103	–	VW3 A5 201	VW3 A7 701	VW3 A7 802
VW3 A5 101, 102, 103	–	VW3 A5 201	VW3 A7 701	VW3 A7 802
VW3 A5 102, 103, 104	VW3 A9 612	VW3 A5 202	VW3 A7 702	VW3 A7 802
VW3 A5 102, 103, 104	VW3 A9 612	VW3 A5 203	VW3 A7 702	VW3 A7 803
VW3 A5 102, 103, 104	VW3 A9 612	VW3 A5 203	VW3 A7 703	VW3 A7 803
VW3 A5 102, 103, 104	VW3 A9 612	VW3 A5 203	VW3 A7 703	VW3 A7 804
VW3 A5 102, 103, 104	VW3 A9 612	VW3 A5 204	VW3 A7 704	VW3 A7 804
VW3 A5 103, 104	VW3 A9 612	VW3 A5 204	VW3 A7 704	VW3 A7 804
VW3 A5 103, 104	VW3 A9 612	VW3 A5 204	VW3 A7 704	VW3 A7 804
VW3 A5 103, 104	VW3 A9 612	VW3 A5 205	VW3 A7 705	VW3 A7 805
VW3 A5 104	VW3 A9 612	VW3 A5 205	VW3 A7 707	VW3 A7 805
VW3 A5 104	VW3 A9 612	VW3 A5 206	VW3 A7 707	VW3 A7 805
VW3 A5 104	VW3 A9 612	VW3 A5 206	VW3 A7 707	VW3 A7 806
88	89	91	66	69

Table showing possible combinations of ATV 71P●●●N4Z drive options

Motor		Drive	Options					
			DC choke	Line choke	Passive filter	Additional EMC filter	Motor choke	IP 20 kit for motor choke
kW	***HP***							
Three-phase supply voltage: 380…480 V 50/60 Hz								
0.75	*1*	**ATV 71P075N4Z**	VW3 A4 501	VW3 A4 551	VW3 A4 6●1	VW3 A4 401	VW3 A5 101, 102, 103	–
1.5	*2*	**ATV 71PU15N4Z**	VW3 A4 502	VW3 A4 551	VW3 A4 6●1	VW3 A4 401	VW3 A5 101, 102, 103	–
2.2	*3*	**ATV 71PU22N4Z**	VW3 A4 503	VW3 A4 552	VW3 A4 6●1	VW3 A4 401	VW3 A5 101, 102, 103	–
3	–	**ATV 71PU30N4Z**	VW3 A4 503	VW3 A4 552	VW3 A4 6●1	VW3 A4 402	VW3 A5 101, 102, 103	–
4	*5*	**ATV 71PU40N4Z**	VW3 A4 504	VW3 A4 552	VW3 A4 6●2	VW3 A4 402	VW3 A5 101, 102, 103	–
5.5	*7.5*	**ATV 71PU55N4Z**	VW3 A4 505	VW3 A4 553	VW3 A4 6●2	VW3 A4 403	VW3 A5 102, 103, 104	VW3 A9 612
7.5	*10*	**ATV 71PU75N4Z**	VW3 A4 506	VW3 A4 553	VW3 A4 6●3	VW3 A4 403	VW3 A5 102, 103, 104	VW3 A9 612
11	*15*	**ATV 71PD11N4Z**	VW3 A4 507	VW3 A4 554	VW3 A4 6●3	VW3 A4 404	VW3 A5 102, 103, 104	VW3 A9 612
Page		18	77	79	82	85	88	89

Table showing possible combinations of ATV 71H●●●SX6 drive options

Motor		Drive	Options					
			DC choke	Line choke	Passive filter	Additional EMC filter	Motor choke	IP 20 kit for motor choke
kW	***HP***							
500 V	***575 V***							
Three-phase supply voltage: 500…600 V 50/60 Hz								
1.5	*2.0*	**ATV71HU15S6X**	–	VW3 A4 551	–	–	VW3 A4 102, 103, 104	–
2.2	*3.0*	**ATV71HU22S6X**	–	VW3 A4 551	–	–	VW3 A4 102, 103, 104	–
3.0	–	**ATV71HU30S6X**	–	VW3 A4 552	–	–	VW3 A4 102, 103, 104	–
4.0	*5.0*	**ATV71HU40S6X**	–	VW3 A4 552	–	–	VW3 A4 102, 103, 104	–
5.5	*7.5*	**ATV71HU55S6X**	–	VW3 A4 552	–	–	VW3 A4 102, 103, 104	–
7.5	*10.0*	**ATV71HU75S6X**	–	VW3 A4 553	–	–	VW3 A4 102, 103, 104	–
Page		20	–	80	–	–	89	–

Sinus filter	Braking resistor	Hoist resistor	Kit for mounting in a dust and damp proof enclosure	Fan	UL Type 1 conformity kit (outside enclosure)	IP 21 or IP 31 conformity kit (outside enclosure)
VW3 A5 201	VW3 A7 701	VW3 A7 801	VW3 A9 801	VZ3 V1 203	VW3 A9 201	VW3 A9 101
VW3 A5 201	VW3 A7 701	VW3 A7 801	VW3 A9 801	VZ3 V1 203	VW3 A9 201	VW3 A9 101
VW3 A5 201	VW3 A7 701	VW3 A7 801	VW3 A9 801	VZ3 V1 203	VW3 A9 201	VW3 A9 101
VW3 A5 201	VW3 A7 701	VW3 A7 802	VW3 A9 802	VZ3 V1 209	VW3 A9 202	VW3 A9 102
VW3 A5 201	VW3 A7 701	VW3 A7 802	VW3 A9 802	VZ3 V1 209	VW3 A9 202	VW3 A9 102
VW3 A5 202	VW3 A7 702	VW3 A7 802	VW3 A9 803	VZ3 V1 204	VW3 A9 203	VW3 A9 103
VW3 A5 203	VW3 A7 702	VW3 A7 803	VW3 A9 803	VZ3 V1 204	VW3 A9 203	VW3 A9 103
VW3 A5 203	VW3 A7 703	VW3 A7 803	–	VZ3 V1 210	VW3 A9 204	VW3 A9 104
91	66	69	27	27	28	29

Sinus filter	Braking resistor	Hoist resistor	Flush-mounting kit (inside dust and damp proof enclosure)	Fan	UL Type 1 conformity kit (outside enclosure)	IP 21 or IP 31 conformity kit (outside enclosure)
–	VW3 A7 702	VW3 A7 801	VW3 A9 504	–	VW3 A9 204	VW3 A9 104
–	VW3 A7 702	VW3 A7 802	VW3 A9 504	–	VW3 A9 204	VW3 A9 104
–	VW3 A7 702	VW3 A7 802	VW3 A9 504	–	VW3 A9 204	VW3 A9 104
–	VW3 A7 702	VW3 A7 802	VW3 A9 504	–	VW3 A9 204	VW3 A9 104
–	VW3 A7 702	VW3 A7 802	VW3 A9 504	–	VW3 A9 204	VW3 A9 104
–	VW3 A7 702	VW3 A7 802	VW3 A9 504	–	VW3 A9 204	VW3 A9 104
–	67	69	26	–	28	29

Table showing possible combinations of ATV 71H●●●Y drive options

Motor			Drive	Options					
				Line choke	Motor choke	IP 20 kit for motor choke	Resistance braking unit	Braking resistor	Hoist resistor
500 V	*575 V*	690 V							
kW	*HP*	kW							
Three-phase supply voltage: 500…690 V 50/60 Hz									
1.5	*2*	2.2	**ATV 71HU22Y**	VW3 A4 551	VW3 A5 101, 102, 103	–	–	VW3 A7 701	VW3 A7 801
2.2	*3*	3	**ATV 71HU30Y**	VW3 A4 551	VW3 A5 101, 102, 103	–	–	VW3 A7 701	VW3 A7 802
3	–	4	**ATV 71HU40Y**	VW3 A4 551	VW3 A5 101, 102, 103	–	–	VW3 A7 701	VW3 A7 802
4	*5*	5.5	**ATV 71HU55Y**	VW3 A4 552	VW3 A5 101, 102, 103	–	–	VW3 A7 701	VW3 A7 802
5.5	*7.5*	7.5	**ATV 71HU75Y**	VW3 A4 552	VW3 A5 101, 102, 103	–	–	VW3 A7 702	VW3 A7 803
7.5	*10*	11	**ATV 71HD11Y**	VW3 A4 553	VW3 A5 102, 103, 104	VW3 A9 612	–	VW3 A7 702	VW3 A7 803
11	*15*	15	**ATV 71HD15Y**	VW3 A4 553	VW3 A5 102, 103, 104	VW3 A9 612	–	VW3 A7 703	VW3 A7 804
15	*20*	18.5	**ATV 71HD18Y**	VW3 A4 554	VW3 A5 102, 103, 104	VW3 A9 612	–	VW3 A7 703	VW3 A7 804
18.5	*25*	22	**ATV 71HD22Y**	VW3 A4 554	VW3 A5 102, 103, 104	VW3 A9 612	–	VW3 A7 704	VW3 A7 804
22	*30*	30	**ATV 71HD30Y**	VW3 A4 555	VW3 A5 102, 103, 104	VW3 A9 612	–	VW3 A7 704	VW3 A7 804
30	*40*	37	**ATV 71HD37Y**	VW3 A4 555	VW3 A5 103, 104	VW3 A9 612	–	VW3 A7 704	VW3 A7 805
37	*50*	45	**ATV 71HD45Y**	VW3 A4 555	VW3 A5 103, 104	VW3 A9 612	–	VW3 A7 705	VW3 A7 805
45	*60*	55	**ATV 71HD55Y**	VW3 A4 556	VW3 A5 103, 104	VW3 A9 612	–	VW3 A7 705	VW3 A7 805
55	*75*	75	**ATV 71HD75Y**	VW3 A4 556	VW3 A5 104	VW3 A9 612	–	VW3 A7 707	VW3 A7 818
75	*100*	90	**ATV 71HD90Y**	VW3 A4 556	VW3 A5 104	VW3 A9 612	–	VW3 A7 707	VW3 A7 818
90	*125*	110	**ATV 71HC11Y**	VW3 A4 570	VW3 A5 104	VW3 A9 612	–	VW3 A7 806	VW3 A7 806
110	*150*	132	**ATV 71HC13Y**	VW3 A4 571	VW3 A5 104	VW3 A9 612	–	VW3 A7 806	VW3 A7 805
132	–	160	**ATV 71HC16Y**	VW3 A4 571	VW3 A5 105	VW3 A9 612	–	VW3 A7 805	VW3 A7 805
160	*200*	200	**ATV 71HC20Y**	VW3 A4 560	VW3 A5 105	VW3 A9 612	VW3 A7 103	VW3 A7 805	VW3 A7 806
200	*250*	250	**ATV 71HC25Y**	VW3 A4 572	VW3 A5 106	VW3 A9 613	VW3 A7 103	VW3 A7 806	VW3 A7 716
250	*350*	315	**ATV 71HC31Y**	VW3 A4 572	VW3 A5 106	VW3 A9 613	VW3 A7 103	VW3 A7 716	VW3 A7 814
315	*450*	400	**ATV 71HC40Y**	VW3 A4 568	VW3 A5 107	VW3 A9 613	VW3 A7 104	VW3 A7 814	VW3 A7 717
400	*550*	500	**ATV 71HC50Y**	VW3 A4 572	VW3 A5 107	VW3 A9 613	VW3 A7 104	VW3 A7 717	VW3 A7 718
500	*700*	630	**ATV 71HC63Y**	VW3 A4 572	VW3 A5 108	VW3 A9 613	VW3 A7 104	VW3 A7 718	VW3 A7 816
Page			20	80	89	89	64	67	69

Table showing possible combinations of ATV 71Q●●●Y drive options

90	*125*	10	**ATV 71QC11Y**	VW3 A4 570	VW3 A5 104	VW3 A9 612	–	VW3 A7 806	VW3 A7 806
110	*150*	132	**ATV 71QC13Y**	VW3 A4 571	VW3 A5 104	VW3 A9 612	–	VW3 A7 806	VW3 A7 805
132	–	160	**ATV 71QC16Y**	VW3 A4 571	VW3 A5 105	VW3 A9 612	–	VW3 A7 805	VW3 A7 805
160	*200*	200	**ATV 71QC20Y**	VW3 A4 560	VW3 A5 105	VW3 A9 612	VW3 A7 103	VW3 A7 805	VW3 A7 806
200	*250*	250	**ATV 71QC25Y**	VW3 A4 572	VW3 A5 106	VW3 A9 613	VW3 A7 103	VW3 A7 806	VW3 A7 716
250	*350*	315	**ATV 71QC31Y**	VW3 A4 572	VW3 A5 106	VW3 A9 613	VW3 A7 103	VW3 A7 716	VW3 A7 814
315	*450*	400	**ATV 71QC40Y**	VW3 A4 568	VW3 A5 107	VW3 A9 613	VW3 A7 104	VW3 A7 814	VW3 A7 717
400	*550*	500	**ATV 71QC50Y**	VW3 A4 572	VW3 A5 107	VW3 A9 613	VW3 A7 104	VW3 A7 717	VW3 A7 718
500	*700*	630	**ATV 71QC63Y**	VW3 A4 572	VW3 A5 108	VW3 A9 613	VW3 A7 104	VW3 A7 718	VW3 A7 816
Page			21	80	89	89	64	67	69

Flush-mounting kit (in dust and damp proof enclosure)	UL Type 1 conformity kit (outside enclosure)	IP 21 or IP 31 conformity kit (outside enclosure)	Control card fan kit	DNV kit
VW3 A9 506	VW3 A9 206	VW3 A9 106	VW3 A9 404	VW3 A9 642
VW3 A9 506	VW3 A9 206	VW3 A9 106	VW3 A9 404	VW3 A9 642
VW3 A9 506	VW3 A9 206	VW3 A9 106	VW3 A9 404	VW3 A9 642
VW3 A9 506	VW3 A9 206	VW3 A9 106	VW3 A9 404	VW3 A9 642
VW3 A9 506	VW3 A9 206	VW3 A9 106	VW3 A9 404	VW3 A9 642
VW3 A9 506	VW3 A9 206	VW3 A9 106	VW3 A9 404	VW3 A9 642
VW3 A9 506	VW3 A9 206	VW3 A9 106	VW3 A9 404	VW3 A9 642
VW3 A9 506	VW3 A9 206	VW3 A9 106	VW3 A9 404	VW3 A9 642
VW3 A9 506	VW3 A9 206	VW3 A9 106	VW3 A9 404	VW3 A9 642
VW3 A9 506	VW3 A9 206	VW3 A9 106	VW3 A9 404	VW3 A9 642
VW3 A9 509	VW3 A9 208	VW3 A9 108	VW3 A9 407	VW3 A9 643
VW3 A9 509	VW3 A9 208	VW3 A9 108	VW3 A9 407	VW3 A9 643
VW3 A9 509	VW3 A9 208	VW3 A9 108	VW3 A9 407	VW3 A9 643
VW3 A9 509	VW3 A9 208	VW3 A9 108	VW3 A9 407	VW3 A9 643
VW3 A9 509	VW3 A9 208	VW3 A9 108	VW3 A9 407	VW3 A9 643
VW3 A9 512	VW3 A9 211	VW3 A9 111	–	VW3 A9 644
VW3 A9 512	VW3 A9 211	VW3 A9 111	–	VW3 A9 645
VW3 A9 512	VW3 A9 211	VW3 A9 111	–	VW3 A9 645
VW3 A9 514, 515	VW3 A9 213, 214	VW3 A9 113, 114	–	VW3 A9 646
VW3 A9 514, 515	VW3 A9 213, 214	VW3 A9 113, 114	–	VW3 A9 647
VW3 A9 514, 515	VW3 A9 213, 214	VW3 A9 113, 114	–	VW3 A9 647
–	–	VW3 A9 116	–	VW3 A9 648
–	–	VW3 A9 116	–	VW3 A9 649
–	–	VW3 A9 116	–	VW3 A9 649
26	28	29	25	23
–	–	–	–	–
–	–	–	–	–
–	–	–	–	–
–	–	–	–	–
–	–	–	–	–
–	–	–	–	–
–	–	–	–	–
–	–	–	–	–
–	–	–	–	–
–	–	–	–	–

List of options common to Altivar 71 drives

Description	Reference	Page
Logic input adaptor		
Adapter for 115 V ∼ logic inputs	VW3 A3 101	25
HMI terminal		
Remote graphic display terminal	VW3 A1 101	32
Encoder interface cards *(1)*		
With RS 422 compatible differential outputs	VW3 A3 401, 402	52
With open collector outputs	VW3 A3 403, 404	52
With push-pull outputs	VW3 A3 405…407	52
With RS 422 compatible differential outputs with encoder emulation	VW3 A3 411	52
I/O expansion cards *(1)*		
Logic	VW3 A3 201	53
Extended	VW3 A3 202	53
Programmable card *(1)*		
Controller Inside programmable card	VW3 A3 501	57

List of options specific to Altivar 71H●●●M3383, M3X383 and N4383 drives

Description	Reference	Page
Encoder interface cards		
Resolver	VW3 A3 408	52
Universal with SinCos, SinCos Hiperface®, EnDat® or SSI	VW3 A3 409	52

List of communication cards *(1)*

Description	Reference	Page
Modbus TCP Daisy chain	VW3 A3 310D	62
EtherNet/IP	VW3 A3 316	62
DeviceNet	VW3 A3 309	62
InterBus	VW3 A3 304	62
CC-Link	VW3 A3 317	62
Modbus/Uni-Telway	VW3 A3 303	62
PROFIBUS DP V0	VW3 A3 307	63
PROFIBUS DP V1	VW3 A3 307S371	63
EtherCAT	VW3 A3 326	63

(1) For card compatibility table, see opposite.

Card compatibility table *(1)*

Type of card	Encoder interface VW3 A3 4••	Logic I/O VW3 A3 201	Extended I/O VW3 A3 202	Controller Inside programmable VW3 A3 501	Communication VW3 A3 3••
Encoder interface VW3 A3 4••					
Logic I/O VW3 A3 201					
Extended I/O VW3 A3 202					
Controller Inside programmable VW3 A3 501					
Communication VW3 A3 3••					

Combination possible

Combination not possible

(1) Maximum combination involving two types of card is 2.

Variable speed drives
Altivar 71
Option: encoder interface cards

Presentation

PF121623



Encoder interface card VW3 A3 401

Encoder interface cards are used for Flux Vector Control operation with sensor (FVC mode) for asynchronous motors, or for Vector Control operation with speed feedback (FSY mode) for synchronous motors.
They improve drive performance irrespective of the motor load state:
- Zero speed torque
- Accurate speed regulation
- Torque accuracy
- Shorter response times on a torque surge
- Improved dynamic performance in transient state

For asynchronous motors, in the other control modes (voltage vector control, voltage/frequency ratio), encoder interface cards improve static speed accuracy.

Depending on the model, encoder interface cards can also be used for machine safety, irrespective of the control type:
- Overspeed detection
- Load slipping detection

They can also transmit a reference provided by the encoder input to the Altivar 71. This use is specific to synchronizing the speed of several drives. These two functions are available for encoder interface cards VW3 A3 401 to VW3 A3 407 and VW3 A3 411.

Six types of card are available depending on the encoder technology (incremental or absolute):
- RS 422 compatible differential outputs
- Open collector outputs (NPN)
- Push-pull outputs
- Resolver *(1)*
- SinCos, SinCos Hiperface®, EnDat® or SSI output *(1)*
- RS 422 compatible differential outputs with encoder emulation (RS 422 ESIM)

The RS 422 ESIM (Encoder SIMulation) encoder interface card is used to indicate the position and speed of the motor to a motion controller via the RS 422 interface ESIM output.
It is also used to establish a master/slave relationship between two Altivar 71 drives.

The Altivar 71 variable speed drive can only take one encoder interface card. Please refer to the compatibility table on page 51.

The interface encoder card is inserted in a dedicated slot.

It is protected against short circuits and overloads.

References

Description	Used with encoder *(2)*	Voltage	Maximum current	Maximum cable length	Maximum operating frequency	Reference	Weight
		V	mA	m	kHz		kg
Encoder interface card with RS422 compatible differential outputs	XCC 1●●●●●●●X XCC 1●●●●●●●R XCC 1●●●●●●●RN	5	200	50	300	**VW3 A3 401**	0.200
	XCC 1●●●●●●●X	15	175	100	300	**VW3 A3 402** *(3)*	0.200
Encoder interface cards with open collector outputs	–	12	175	500	300	**VW3 A3 403**	0.200
		15	175	500	300	**VW3 A3 404**	0.200
Encoder interface cards with push-pull outputs	XCC 1●●●●●●●Y	12	175	500	300	**VW3 A3 405**	0.200
	XCC 1●●●●●●●K	15	175	500	300	**VW3 A3 406**	0.200
	XCC 1●●●●●●●KN	24	100	500	300	**VW3 A3 407**	0.200
Resolver encoder interface card	–	1.25…5.6	50	200	4, 8 or 12	**VW3 A3 408** *(1)*	0.100
Universal encoder interface card with SinCos, SinCos Hiperface®, EnDat® or SSI output	–	5, 8 or 12	200	50	500	**VW3 A3 409** *(1)*	0.200
Encoder interface cards with RS 422 compatible differential outputs with encoder emulation	–	5	200	50	300	**VW3 A3 411**	0.200
		15	200	100			

(1) Card requires an ATV 71 H●●●N4383 drive (see page 22).
(2) To determine the complete encoder reference, please refer to the "Detection for automation solutions - OsiSense" catalogue or our website www.schneider-electric.com.
(3) The VW3 A3 402 card ensures compatibility between Altivar 68F drive applications and Altivar 71 drive applications.

Variable speed drives
Altivar 71
Option: I/O extension cards

Presentation

PF121620

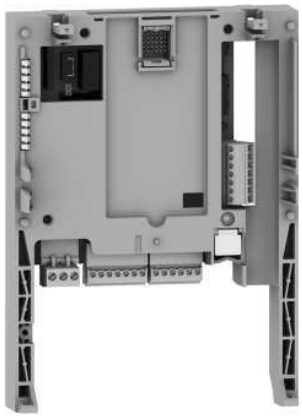

Extended I/O card VW3 A3 202

Altivar 71 variable speed drives can be adapted for more complex or extensive applications by installing I/O extension cards.

Two models are available:
- ■ Card with logic I/O featuring:
- □ 1 relay logic output ("C/O" contact)
- □ 4 x 24 V ⎓ positive logic (Source) or negative logic (Sink) inputs
- □ 2 x 24 V ⎓ open collector positive logic (Source) or negative logic (Sink) outputs
- □ 1 input for 6 PTC probes *(1)*

- ■ Card with extended I/O featuring:
- □ 1 differential current analog input 0...20 mA
- □ 1 software-configurable voltage analog input (0...10 V ⎓) or current (0...20 mA)
- □ 2 software-configurable voltage analog outputs (± 10 V, 0...10 V ⎓) or current (0...20 mA)
- □ 1 relay logic output
- □ 4 x 24 V ⎓ positive logic (Source) or negative logic (Sink) inputs
- □ 2 x 24 V ⎓ open collector positive logic (Source) or negative logic (Sink) outputs
- □ 1 input for 6 PTC probes *(1)*
- □ 1 frequency control input

The Altivar 71 variable speed drive can only take one I/O extension card with the same reference.
Please refer to the card compatibility table on page 51.

References

Description	Type of I/O							Reference	Weight
	Logic input	Logic output	Relay logic output	Analog input	Analog output	Input for PTC probes *(1)*	Frequency control input		kg
Logic I/O card	4	2	1	–	–	1	–	**VW3 A3 201**	0.300
Extended I/O card	4	2	1	2	2	1	1	**VW3 A3 202**	0.300

(1) This PTC probe input must never be used to protect an ATEX motor in applications in explosive atmospheres. Please refer to the ATEX guide which is available on our website www.schneider-electric.com.

Drive/option combinations:
pages 50 and 51

Variable speed drives
Altivar 71
Option: Controller Inside programmable card

Presentation

The Controller Inside programmable card is used to adapt the variable speed drive to specific applications by integrating control system functions.

Various predefined configurable applications are sold by Schneider Electric and its partners.
The PS 1131 software workshop is used for programming and debugging new applications, quickly and in an open-ended manner in accordance with standard IEC 61131-3.
It is not possible to transfer the program from the card to the PC, therefore know-how is protected.

A single Controller Inside programmable card can be installed in the Altivar 71 drive. It can be combined with another option card (I/O extension or communication). Please refer to the card compatibility table on page 51.

The Controller Inside programmable card features:
- 10 x 24 V ⎓ logic inputs, 2 of which can be used for 2 counters or 4 of which can be used for 1 incremental encoder and/or 3 counters
- 2 x 0…20 mA current analog inputs, impedance 500 Ω
- 6 x 24 V ⎓ open collector positive logic (Source) outputs
- 2 x 0…20 mA current analog outputs, impedance 500 Ω
- A master port for the CANopen machine bus, for controlling other drives and communication with I/O modules and sensors
- A PC port for programming with the PS 1131 software workshop

If the power consumption does not exceed 200 mA, the Controller Inside programmable card can be powered by the Altivar 71 drive. Otherwise, an external 24 V ⎓ power supply must be used.
ATV 71W●●●N4A24 drives incorporate a 24 V ⎓ power supply, allowing additional consumption of 250 mA.

The Controller Inside programmable card can also use:
- The drive I/O
- The I/O extension card I/O
- The encoder interface card points counter
- The drive parameters (speed, current, torque, ετχ.)

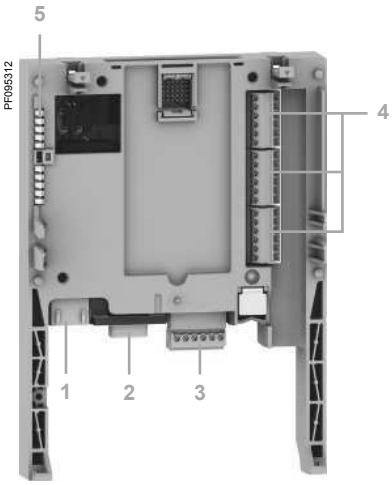

PF098312

Description

1 RJ45 connector for connecting the PS1131 software workshop via an RS 485 serial link.
Connection to the PC is via a cable and RS 232/RS 485 converter included in the PC serial port connection kit, VW3 A8 106.

2 9-way male SUB-D connector for connection to the CANopen machine bus

3 Connector with removable screw terminals, 6 contacts at intervals of 3.81 for the 24 V ⎓ power supply and 4 logic inputs

4 3 connectors with removable screw terminals, 6 contacts at intervals of 3.81 for 6 logic inputs, 6 logic outputs, 2 analog inputs, 2 analog outputs and 2 commons

5 5 LEDs:
- 1 to indicate the presence of the 24 V ⎓ power supply
- 1 to indicate a program execution fault
- 2 to indicate the CANopen bus communication status
- 1 controlled by the application program

Drive/option combinations:
pages 50 and 51

Variable speed drives
Altivar 71
Option: Controller Inside programmable card

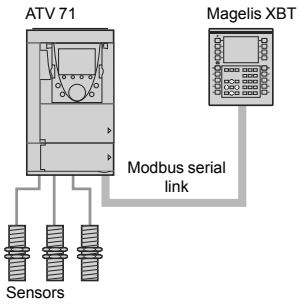

Independent machine with multiwire system

Dialogue

Human-machine dialogue with the application programmed in the Controller Inside programmable card is possible using:

■ The Altivar 71 graphic display terminal: The graphic terminal has a menu dedicated to the Controller Inside programmable card. This menu can be customized by the program depending on the application.

■ A Magelis industrial HMI terminal, connected to:

- The drive's Modbus port
- The Modbus TCP network, if the drive is equipped with a Modbus TCP communication card

Any industrial HMI terminal which supports the Modbus protocol can be used to display and modify the Controller Inside programmable card parameters.

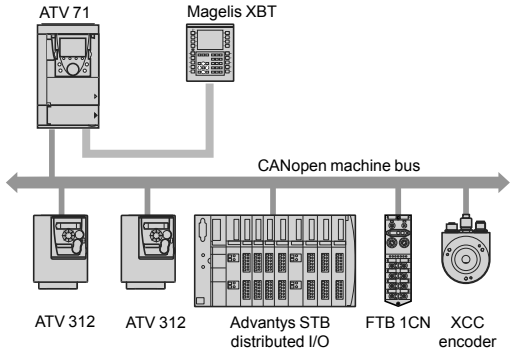

Independent machine with CANopen bus

Master CANopen communication

The master CANopen port on the Controller Inside programmable card can be used to extend the I/O capacity and to control other CANopen slave devices.

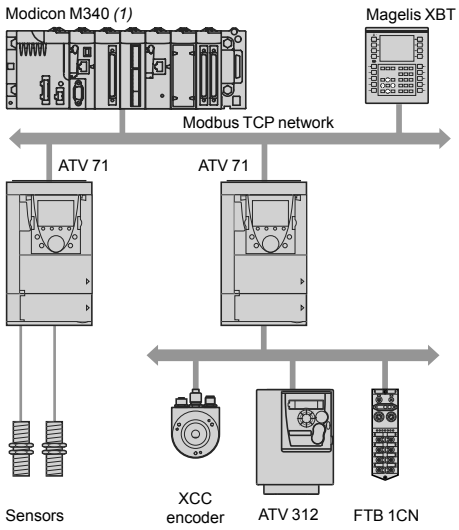

Modular machine with Modbus TCP network

Communication with a PLC

An Altivar 71 drive equipped with a Controller Inside programmable card integrates easily into complex architectures.

Regardless of which bus, network or serial link is being used (Modbus TCP, Modbus/ Uni-Telway, PROFIBUS DP, INTERBUS, etc.), the PLC can communicate with the Controller Inside programmable card and the drive.
The periodic variables can still be configured as required.

Clock

A clock backed up by a lithium battery makes it possible to keep a log of events. When the Controller Inside programmable card is installed in the drive, drive faults are automatically time and date-stamped without any special programming.

(1) Please refer to the "Modicon M340 Automation Platform" catalogue.

Drive/option combinations:
pages 50 and 51

PS 1131 software workshop

The PS 1131 software workshop conforms to international standard IEC/EN 61131-3 and includes all the functions for programming and setting up the Controller Inside programmable card.
It includes the CANopen configurator.

It is designed for Microsoft Windows® 98, Microsoft Windows® NT 4.0, Microsoft Windows® Millennium, Microsoft Windows® 2000 Professional and Microsoft Windows® XP operating systems.
It benefits from the user-friendly interface associated with these operating systems:
- Pop-up menus
- Function blocks
- Online help

The PS 1131 software workshop is available in both English and German.

The programming and debugging tools can be accessed via the application browser. This provides the user with an overview of the program and quick access to all the application components:
- Program editor
- Function blocks editor
- Variables editor
- Animation tables editor
- Runtime screens editor

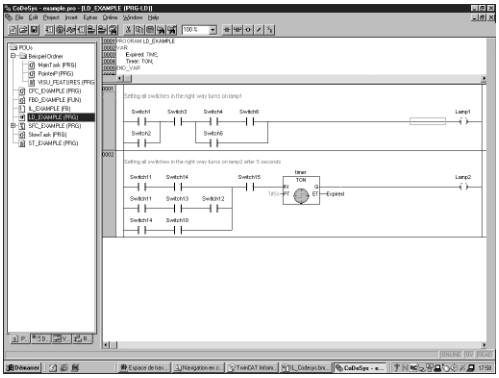

Example of Ladder Diagram language programming

Modular structured programming

The PS 1131 software workshop is used to structure an application into function modules consisting of sections (program code), animation tables and runtime screens.
Each program section has a name and is programmed in one of six available languages:
- Ladder Diagram (LD)
- Structured Text (ST)
- Grafcet (SFC)
- Instruction List (IL)
- Function Block Diagram (FBD)
- Continuous Flow Chart (CFC)

To protect know-how or prevent any accidental modification, each section can be write-protected or read/write-protected.

Function blocks

The PS 1131 software workshop features pre-programmed function blocks which make up the standard library.
Exchanges with the drive are performed by a function block available in the standard library.

The software workshop also offers users the option of creating their own function blocks and thus creating a user library.
The user library is also a means of protecting the know-how contained in the algorithms, as it is possible to lock access to the user function blocks program.

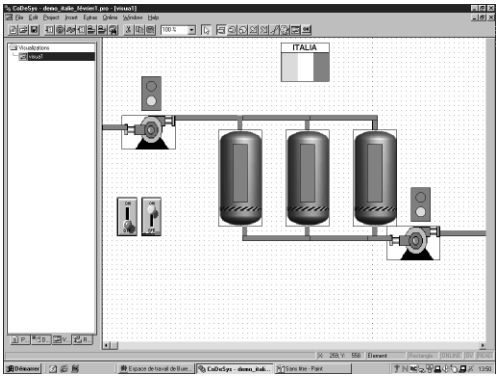

Example of runtime screen

Debugging tools

The PS 1131 software workshop offers a complete set of tools for debugging the application:
- Program execution for debugging (step-by-step execution, execution of a single cycle, etc.)
- Realtime animation of the program with automatic display of the variables
- Animation tables editor with the option to save tables
- Oscilloscope (monitoring up to 20 variables)
- Application runtime screens editor (graphic objects, messages, screen backgrounds, etc.)
- Simulation function for testing the program without using the drive

Drive/option combinations:
pages 50 and 51

Variable speed drives
Altivar 71
Option: Controller Inside programmable card

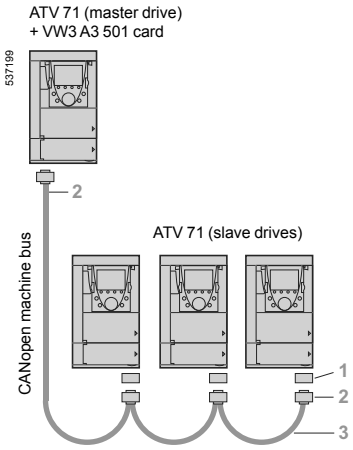

Master/slave application



VW3 CAN A71



TSX CAN KCDF 180 T

References

Card

Description	Reference	Weight kg
Controller Inside programmable card equipped with one 9-way male SUB-D connector	**VW3 A3 501**	0.320

Connection accessories

Description	Item no.	Length m		Weight kg
CANopen adaptor for mounting on the RJ45 socket in the drive control terminals. The adaptor includes a 9-way male SUB-D connector conforming to the CANopen standard (CIA DRP 303-1).	1	–	**VW3 CAN A71**	–
CANopen connector 9-way female SUB-D with line terminator (can be disabled)	2	–	**TSX CAN KCDF 180T**	–

Cables

CANopen cables Standard cable, CE marking. Low smoke zero halogen. Flame retardant (IEC 60332-1).	3	50	**TSX CAN CA 50**	4.930
		100	**TSX CAN CA 100**	8.800
		300	**TSX CAN CA 300**	24.560
CANopen cables UL certified, CE marking. Flame retardant (IEC 60332-2).	3	50	**TSX CAN CB 50**	3.580
		100	**TSX CAN CB 100**	7.840
		300	**TSX CAN CB 300**	21.870
CANopen cables Cable for harsh environments *(1)* or mobile installations, CE marking. Low smoke zero halogen. Flame retardant (IEC 60332-1).	3	50	**TSX CAN CD 30**	3.510
		100	**TSX CAN CD 100**	7.770
		300	**TSX CAN CD 300**	21.700

PS 1131 software workshop

Description	Reference	Weight kg
PS 1131 software workshop supplied on CD-ROM	***(2)***	–
PC serial port connection kit including various accessories such as: ■ 1 x 3 m cable with two RJ45 connectors ■ 1 RS 232/RS 485 converter with one 9-way female SUB-D connector and one RJ45 connector	**VW3 A8 106**	0.350

(1) Harsh environments:
- Resistance to hydrocarbons, industrial oils, detergents, solder splashes
- Relative humidity up to 100%
- Saline atmosphere
- Significant temperature variations
- Operating temperature between - 10°C and + 70°C
(2) The product reference is provided as part of the Controller Inside programmable card training course. Please consult our Customer Care Centre.

Drive/option combinations:
pages 50 and 51

Variable speed drives
Altivar 71
Communication buses and networks

537201

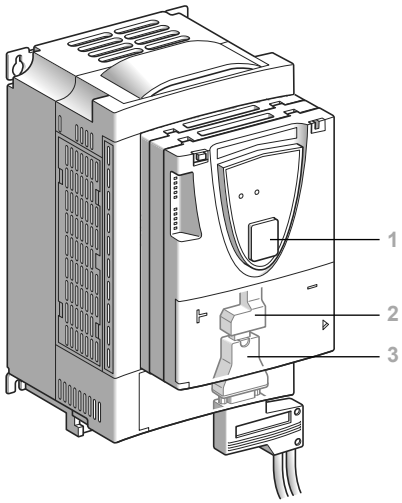

Integrated communication for Modbus and CANopen protocols

600267

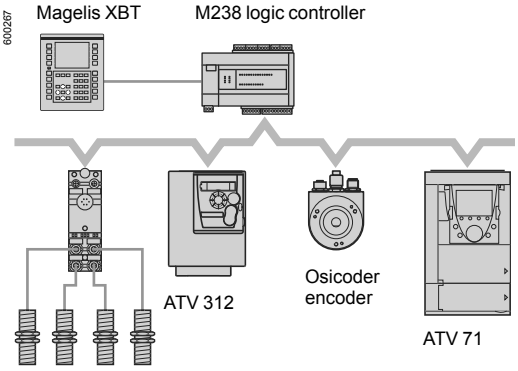

Configuration example on CANopen machine bus

Presentation

The Altivar 71 drive has been designed to meet all the configuration requirements encountered within the context of industrial communication installations.

Integrated communication protocols

It includes Modbus and CANopen communication protocols as standard.

Two integrated communication ports enable direct access to the Modbus protocol:
- One RJ45 Modbus terminal port 1, located on the drive front panel, which is used to connect a Human Machine Interface or one of the following configuration tools:
  - Remote graphic display terminal
  - Magelis industrial HMI terminal
  - SoMove setup software
  - Simple Loader and Multi-Loader configuration tools

- One RJ45 Modbus network port 2, located on the drive's control terminals which is assigned to control and signalling by a PLC or by another type of controller. It can also be used to connect a terminal or the SoMove setup software.

The CANopen protocol can be accessed from the Modbus network port 2 via the daisy chain tap or the CANopen adaptor 3. In this case, the terminal port 1 must be used to access the Modbus protocol.

The characteristics of the communication ports for Modbus and CANopen protocols are available on our website www.schneider-electric.com.

Optional communication cards

The Altivar 71 drive can also be connected to the following industrial communication buses and networks by adding one of the communication option cards:
- Modbus TCP Daisy Chain
- Modbus/Uni-Telway (this card provides access to additional functions, which complement those of the integrated ports (Modbus ASCII and 4-wire RS 485))
- EtherNet/IP
- DeviceNet
- PROFIBUS DP V0 and V1
- INTERBUS
- CC-LINK
- EtherCAT

The option of powering the control part separately enables communication to be maintained (monitoring, diagnostics) even if there is no power supply to the power part.

The main communication functions of Altivar 58 and Altivar 58F drives are compatible with the Altivar 71:
- Connection
- Communication services
- Drive behaviour (profile)
- Control and monitoring parameters
- Standard adjustment parameters

Communication module

Altivar 71 drives can also connect to the Fipio bus using the communication module which is available as an option (see page 63).

Drive/option combinations:
pages 40 to 51

Functions

All drive functions can be accessed via the network:
- Configuration
- Adjustment
- Control
- Monitoring

The Altivar 71 drive's advanced functions provide excellent interfacing flexibility. They enable the different control sources (I/O, communication networks, communication cards and HMI terminal) to be assigned to control functions that satisfy the requirements of numerous, extremely complex applications.
Network configuration is simplified through the provision of configuration software (configurator for SyCon® networks, etc.).

For the integrated Modbus and CANopen ports and the communication cards for industrial applications, the Altivar 71 drive can be controlled:
- According to the CiA 402 profile
- According to the I/O profile, where control is as simple and adaptable as control via the I/O terminals

The DeviceNet card also supports CIP AC Drive and Allen-Bradley drive profiles; PROFIBUS DP V0 and V1 cards also support the PROFIdrive profile.

Communication is monitored according to the specific criteria for each protocol. However, regardless of the protocol, it is possible to configure how the drive responds to a communication fault:
- Freewheel stop, stop on ramp, fast stop or braked stop
- Maintain the last command received
- Fallback position at a predefined speed
- Ignore the fault

A command from the CANopen machine bus is processed with the same priority as one of the drive terminal inputs. This results in excellent response times on the network port via the CANopen adaptor.

Drive/option combinations:
pages 40 to 51

Variable speed drives
Altivar 71
Communication buses and networks

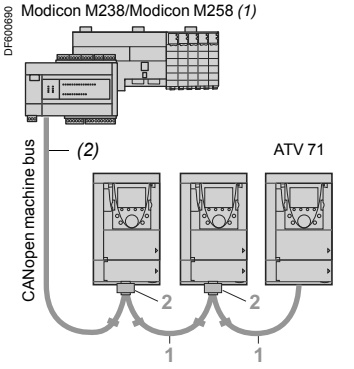

Optimized solution for daisy chain connection to the CANopen machine bus

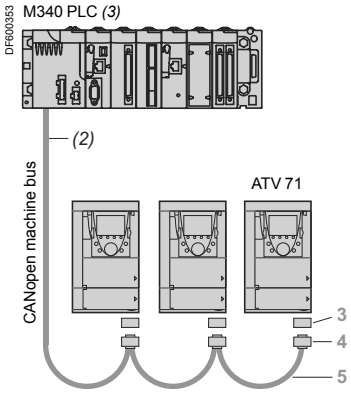

Example of CANopen diagram with SUB-D connector

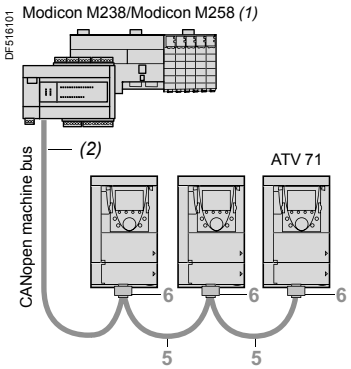

Example of CANopen diagram with daisy chain tap

CANopen machine bus

Description	Item no.	Length m	Reference	Weight kg
Connection via RJ45 connector (optimized solution for daisy chain connection to the CANopen machine bus)				
CANopen cordsets equipped with 2 RJ45 connectors	1	0.3	**VW3 CAN CARR03**	0.050
		1	**VW3 CAN CARR1**	0.500
Daisy chain tap equipped with: ■ 2 RJ45 connectors for connecting the CANopen bus in a daisy chain ■ 1 cordset equipped with an RJ45 connector for connecting the drive	2	0.3	**TCS CTN023F13M03**	–
Connection via SUB-D connector				
CANopen adaptor for mounting on the RJ45 port on the drive control terminals. The adaptor provides a 9-way male SUB-D connector conforming to the CANopen standard (CIA DRP 303-1).	3	–	**VW3 CAN A71**	–
CANopen connector *(4)* 9-way female SUB-D with line terminator (can be disabled). 180° cable outlet for 2 CANopen cables. CAN-H, CAN-L, CAN-GND connection.	4	–	**VW3 CAN KCDF 180T**	–
CANopen cables *(1) (2)* Standard cable, CE marking Low smoke zero halogen Flame retardant (IEC 60332-1)	5	50	**TSX CAN CA 50**	4.930
		100	**TSX CAN CA 100**	8.800
		300	**TSX CAN CA 300**	24.560
CANopen cables *(1) (2)* UL certified, CE marking Flame retardant (IEC 60332-2)	5	50	**TSX CAN CB 50**	3.580
		100	**TSX CAN CB 100**	7.840
		300	**TSX CAN CB 300**	21.870
CANopen cables *(1) (2)* Cable for harsh environments *(5)* or mobile installations, CE marking Low smoke zero halogen Flame retardant (IEC 60332-1)	5	50	**TSX CAN CD 50**	3.510
		100	**TSX CAN CD 100**	7.770
		300	**TSX CAN CD 300**	21.700
Connection via terminals				
Daisy chain tap equipped with: ■ 2 spring terminal blocks for connecting the CANopen bus in a daisy chain ■ 1 cordset equipped with an RJ45 connector for connecting the drive	6	0.6	**TSC CTN026M16M**	–

(1) Please refer to the "Modicon M238 Logic Controller" and "M258 Logic Controller" catalogues.
(2) Cable dependent on the type of controller or PLC.
(3) Please refer to the "Modicon M340 Automation Platform" catalogue.
(4) For ATV 71H●●●M3, ATV 71HD11M3X, HD15M3X, ATV 71H075N4…HD18N4, ATV 71H075N4383...HD18N4383 and ATV 71HU22Y...HC63Y drives, this connector can be replaced by the TSX CAN KCDF 180T connector.
(5) Harsh environments:
- Resistance to hydrocarbons, industrial oils, detergents, solder splashes
- Relative humidity up to 100%
- Saline atmosphere
- Significant temperature variations
- Operating temperature between - 10°C and + 70°C.

Drive/option combinations: pages 40 to 51

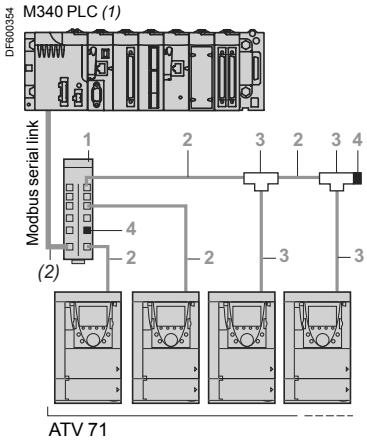

Example of Modbus diagram with connection via splitter box and RJ45 connectors

Modbus serial link

Connection accessories

Description		Item no.	Length m	Unit reference	Weight kg
Modbus splitter box 10 RJ45 connectors and 1 screw terminal		1	–	**LU9 GC3**	0.500
Cables for Modbus serial link equipped with 2 RJ45 connectors		2	0.3	**VW3 A8 306 R03**	0.025
			1	**VW3 A8 306 R10**	0.060
			3	**VW3 A8 306 R30**	0.130
Modbus T-junction boxes (with integrated cable)		3	0.3	**VW3 A8 306 TF03**	0.190
			1	**VW3 A8 306 TF10**	0.210
Line terminators for RJ45 connector *(3)*	R = 120 Ω C = 1 nf	4	–	**VW3 A8 306 RC**	0.010
	R = 150 Ω	4	–	**VW3 A8 306 R**	0.010

(1) Please refer to the "Modicon M340 Automation Platform" catalogue.
(2) Cable dependent on the type of controller or PLC.
(3) Order in lots of 2.

Drive/option combinations:
pages 40 to 51

PF121621



Communication card

Modbus TCP Daisy Chain and EtherNet/IP network *(1) (2)*

Description		Length m	Reference	Weight kg
Communication cards				
Modbus TCP Daisy Chain	Equipped with 2 RJ45 connectors Modbus TCP 10/100 Mbps class C20	–	**VW3 A3 310D**	0.300
EtherNet/IP	Equipped with 2 RJ45 connectors	–	**VW3 A3 316**	0.300
ConneXium Modbus TCP (VW3 A3 310D) or EtherNet/IP (VW3 A3 316) cordsets				
Straight shielded twisted pair cordsets	Equipped with 2 RJ45 connectors To be connected on a hub or on a switch	2	**490 NTW 000 02**	–
		5	**490 NTW 000 05**	–
		12	**490 NTW 000 12**	–
		40	**490 NTW 000 40**	–
		80	**490 NTW 000 80**	–

DeviceNet bus *(1) (2)*

Description		Reference	Weight kg
Communication card			
DeviceNet	Equipped with a 5-way removable screw terminal block	**VW3 A3 309**	0.300

INTERBUS bus *(1) (2)*

Description		Reference	Weight kg
Communication card			
INTERBUS	Equipped with one 9-way male SUB-D connector and one 9-way female SUB-D connector To be connected using cordset 170 MCI ●●●00 *(3)*	**VW3 A3 304**	0.300

CC-LINK bus *(1) (2)*

Description		Reference	Weight kg
Communication card			
CC-LINK	Equipped with a 5-way removable screw terminal block	**VW3 A3 317**	0,300

Modbus/Uni-Telway network *(1) (2)*

Description		Length m	Reference	Weight kg
Communication card				
Modbus/Uni-Telway	Equipped with a 9-way female SUB-D connector	–	**VW3 A3 303**	0.300
Connection accessories for Modbus/Uni-Telway card (VW3 A3 303)				
Subscriber socket	Equipped with two 15-way female SUB-D connectors and two screw terminal blocks. For 2-channel junction box, trunk cable extension and line terminator	–	**TSX SCA 62**	0.570
Cordset for TSX SCA 62 subscriber socket	Equipped with two 9-way and 15-way male SUB-D connectors	3	**VW3 A8 306 2**	0.150

(1) The Altivar 71 drive can only take one communication card. See the summary tables of possible drive, option and accessory combinations on pages 40 to 51.
(2) User manuals can be downloaded from our website www.schneider-electric.com. For the PROFIBUS DP, DeviceNet and LONWORKS cards, the description files in gsd, eds or xif format can also be downloaded from our website www.schneider-electric.com.
(3) Please refer to the "Automation Platform Modicon Premium and Unity - PL7 Software" catalogue.

Drive/option combinations:
pages 40 to 51

PROFIBUS DP V0/V1 *(1) (2)*

Description		Length m	Reference	Weight kg
Communication cards				
PROFIBUS DP V0	Equipped with a 9-way female SUB-D connector	–	**VW3 A3 307**	0.300
PROFIBUS DP V1	Equipped with a 9-way female SUB-D connector	–	**VW3 A3 307S371**	0.300
Connection accessories for PROFIBUS DP V0 (VW3 A3 307) or V1 (VW3 A3 307S371) card				
Connectors: 9-way male SUB-D *(3)*	For middle of line	–	**490 NAD 911 04**	–
	For end of line	–	**490 NAD 911 03**	–
Cable for connector 490 NAD 911 ●● *(3)*		100	**TSX PBS CA100**	–
		400	**TSX PBS CA400**	–

EtherCAT bus *(1) (2)*

Description		Reference	Weight kg
Communication card			
EtherCAT	Equipped with 2 RJ45 connectors	**VW3 A3 326**	0.300

Other communication buses

Description		Length m	Reference	Weight kg
Communication module				
Fipio/Modbus gateway for connection to the Fipio bus		–	**LUF P1**	0.240
Cordset for LUF P gateway				
Cordset for LUF P1 gateway	Equipped with 2 RJ 45 connectors	0.3	**VW3 A8 306 R03**	0.025
		1	**VW3 A8 306 R10**	0.060
		3	**VW3 A8 306 R30**	0.130

(1) The Altivar 71 drive can only take one communication card. See the summary tables of possible drive, option and accessory combinations on pages 40 to 51.
(2) User manuals can be downloaded from our website www.schneider-electric.com. For the PROFIBUS DP, DeviceNet and LonWorks cards, the description files in gsd, eds or xif format can also be downloaded from our website www.schneider-electric.com.
(3) Please refer to the "Automation Platform Modicon Premium and Unity - PL7 Software" catalogue.

Drive/option combinations:
pages 40 to 51

Variable speed drives
Altivar 71
Option: resistance braking units

Presentation

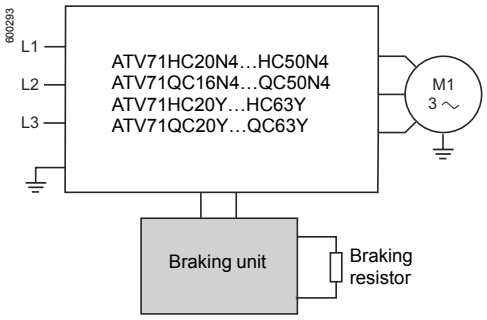

Resistance braking enables Altivar 71 drives to operate while braking to a standstill or during generator operation, by dissipating the energy in the braking resistor.

ATV 71H●●●M3, ATV 71H●●●M3X, ATV 71H075N4…HC16N4, ATV 71W●●●N4, ATV 71P●●●N4Z, ATV 71H●●●S6X and ATV 71HU22Y…HC16Y drives have a built-in dynamic brake transistor.

A braking unit is required for ATV 71HC20N4…HC50N4, ATV 71QC16N4…QC50N4, ATV 71HC20Y…HC63Y and ATV 71QC20Y…QC63Y drives which is controlled by the drive.

For drives
- ATV 71HC20N4, HC28N4 and ATV 71QC16N4…QC25N4, the braking units is mounted directly on the left-hand side of the drive
- ATV 71HC40N4, HC50N4, ATV 71QC40N4, QC50N4, ATV 71HC20Y…HC63Y and ATV 71QC20Y…QC63Y, the braking unit is an external module.

Braking units provide IP 20 protection. Thermal protection is provided by an integrated temperature probe.

Applications

High-inertia machines, machines with slow and fast cycles, high-power machines performing vertical movements.

References

For drives	Power		Loss	Cable (drive - braking unit)		Cable (braking unit - resistors)		Percentage of conduction time	Reference	Weight
	Permanent	Maximum	At continuous power	Cross-section	Maximum length	Cross-section	Maximum length			
	kW	kW	W	mm²	m	mm²	m	%		kg
Supply voltage: 380…480 V 50/60 Hz										
ATV 71HC20N4, HC28N4 ATV 71QC16N4… QC25N4	200	420	550	– Internal connections	–	2 x 95	50	5% at 420 kW 15% at 320 kW 50% at 250 kW	**VW3 A7 101**	30.000
ATV 71HC31N4… HC50N4 ATV 71QC31N4… QC50N4	400	750	1050	2 x 150	1	2 x 150	50	5% at 750 kW 15% at 550 kW 50% at 440 kW	**VW3 A7 102**	80.000
Supply voltage: 500…690 V 50/60 Hz										
ATV 71HC20Y… HC31Y ATV 71QC20Y… QC31Y	300	450	650	2 x 150	1	2 x 150	50	5% at 450 kW 15% at 400 kW 50% at 350 kW	**VW3 A7 103**	80.000
ATV 71HC40Y… HC63Y ATV 71QC40Y… QC63Y	400	900	1150	2 x 150	1	2 x 150	50	5% at 900 kW 15% at 600 kW 50% at 500 kW	**VW3 A7 104**	80.000

***Note**: To increase the braking power, several braking resistors can be mounted in parallel on the same braking unit. In this case, do not forget to take the minimum resistance value to be associated with the braking unit into account, that is:*
- *1.05 ohm for the VW3 A7 101 braking unit*
- *0.7 ohm for the VW3 A7 102 braking unit*
- *2 ohms for the VW3 A7 103 braking unit*
- *1 ohm for the VW3 A7 104 braking unit*

Drive/option combinations:
pages 40 to 51

Variable speed drives
Altivar 71
Option: braking resistors

Presentation

PF105659

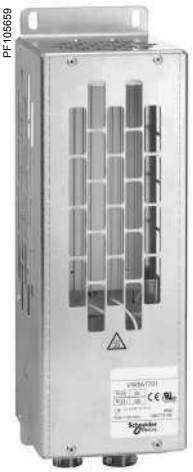

VW3 A7 701

Braking resistors allow Altivar 71 drives to operate while braking to a standstill, by dissipating the braking energy.
They enable maximum transient braking torque.

Braking resistors are designed to be mounted on the outside of the enclosure, but should not inhibit natural cooling. Air inlets and outlets must not be obstructed in any way. The air must be free of dust, corrosive gas and condensation.

Two resistor models are available, depending on the drive rating:
■ One with IP 20 casing and thermal protection provided by temperature-controlled switch or by the drive (VW3 A7 701…709)
■ One with IP 23 casing and thermal protection provided by thermal overload relay (VW3 A7 71● and 8●●)

The internal circuits of Altivar 71 drives rated 160 kW or less have a built-in dynamic brake transistor.

Applications

Inertia machines, machines with cycles

References

For drives	Degree of protection of the resistor	Ohmic value at 20°C	Average power available at 50°C *(1)*	Reference	Weight
		Ω	kW		kg
Supply voltage: 200…240 V 50/60 Hz					
ATV 71H037M3, H075M3	IP 20	100	0.05	**VW3 A7 701**	1.900
ATV 71HU15M3, HU22M3	IP 20	60	0.1	**VW3 A7 702**	2.400
ATV 71HU30M3, HU40M3	IP 20	28	0.2	**VW3 A7 703**	3.500
ATV 71HU55M3, HU75M3	IP 20	15	1	**VW3 A7 704**	11.000
ATV 71HD11M3X	IP 20	10	1	**VW3 A7 705**	11.000
ATV 71HD15M3X	IP 20	8	1	**VW3 A7 706**	11.000
ATV 71HD18M3X, HD22M3X	IP 20	5	1.3	**VW3 A7 707**	11.000
ATV 71HD30M3X	IP 20	4	1	**VW3 A7 708**	11.000
ATV 71HD37M3X, HD45M3X	IP 20	2.5	1	**VW3 A7 709**	11.000
ATV 71HD55M3X, HD75M3X	IP 23	1.8	15.3	**VW3 A7 713**	50.000

(1) Load factor for resistors: the value of the average power that can be dissipated at 50°C from the resistor into the casing is determined for a load factor during braking that corresponds to the majority of normal applications:
For VW3 A7 701…709:
- 2 s braking with a 0.6 Tn braking torque for a 40 s cycle
- 0.8 s braking with a 1.5 Tn braking torque for a 40 s cycle
For VW3 A7 713:
- 10 s braking with a 2 Tn braking torque for a 30 s cycle

Drive/option combinations:
pages 40 to 51

Variable speed drives
Altivar 71
Option: braking resistors

PF105659

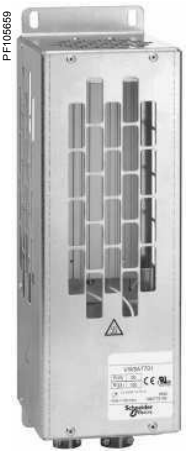

VW3 A7 701

References (continued)

For drives	Degree of protection of the resistor	Ohmic value at 20°C	Average power available at 50°C *(1)*	Reference	Weight
		Ω	kW		kg
Supply voltage: 380…480 V 50/60 Hz					
ATV 71H075N4…HU40N4 ATV 71W075N4, WU40N4 ATV 71P075N4Z…PU55N4Z	IP 20	100	0.05	**VW3 A7 701**	1.900
ATV 71HU55N4, HU75N4 ATV 71WU55N4, WU75N4 ATV 71PU55N4Z, PU75N4Z	IP 20	60	0.1	**VW3 A7 702**	2.400
ATV 71HD11N4, HD15N4 ATV 71WD11N4, WD15N4 ATV 71PD11N4Z	IP 20	28	0.2	**VW3 A7 703**	3.500
ATV 71HD18N4…HD30N4 ATV 71WD18N4…WD30N4	IP 20	15	1	**VW3 A7 704**	11.000
ATV 71HD37N4 ATV 71WD37N4	IP 20	10	1	**VW3 A7 705**	11.000
ATV 71HD45N4...HD75N4 ATV 71WD45N4...WD75N4	IP 20	5	1.3	**VW3 A7 707**	11.00
ATV 71HD90N4 ATV 71QD90N4	IP 23	2.75	25	**VW3 A7 710**	80.000
ATV 71HC11N4, HC13N4 ATV 71QC11N4, QC13N4	IP 23	2.1	37	**VW3 A7 711**	86.000
ATV 71HC16N4 ATV 71QC16N4	IP 23	2.1	44	**VW3 A7 712**	104.000
ATV 71HC20N4 ATV 71QC20N4	IP 23	1.05	56	**VW3 A7 715**	136.000
ATV 71HC25N4, HC28N4 ATV 71QC25N4	IP 23	1.05	75	**VW3 A7 716**	172.000
ATV 71HC31N4, HC40N4 ATV 71QC31N4, QC40N4	IP 23	0.7	112	**VW3 A7 717**	266.000
ATV 71HC50N4 ATV 71QC50N4	IP 23	0.7	150	**VW3 A7 718**	350.000

(1) Load factor for resistors: the value of the average power that can be dissipated at 50°C from the resistor into the casing is determined for a load factor during braking that corresponds to the majority of normal applications:
For VW3 A7 701…705 and VW3 A7 707:
- 2 s braking with a 0.6 Tn braking torque for a 40 s cycle
- 0.8 s braking with a 1.5 Tn braking torque for a 40 s cycle
For VW3 A7 710…712 and 715…718:
- 10 s braking with a 2 Tn braking torque for a 30 s cycle

Drive/option combinations:
pages 40 to 51

Variable speed drives
Altivar 71
Option: braking resistors

PF105659

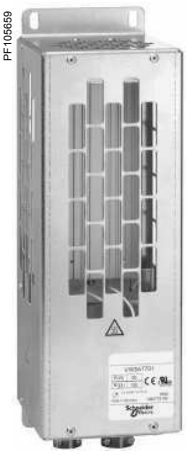

VW3 A7 701

References (continued)

For drives	Degree of protection of the resistor	Ohmic value at 20°C	Average power available at 50°C *(1)*	Quantity required per drive	Reference	Weight
		Ω	kW			kg
Supply voltage: 500…600 V 50/60 Hz						
ATV 71HU15S6X…HU75S6X	IP 20	60	0.1	1	**VW3 A7 702**	2.400
Supply voltage: 500…690 V 50/60 Hz						
ATV 71HU22Y…HU55Y	IP 20	100	0.05	1	**VW3 A7 701**	1.900
ATV 71HU75Y, HD11Y	IP 20	60	0.1	1	**VW3 A7 702**	2.400
ATV 71HD15Y, HD18Y	IP 20	28	0.2	1	**VW3 A7 703**	3.500
ATV 71HD22Y…HD37Y	IP 20	15	1	1	**VW3 A7 704**	11.000
ATV 71HD45Y, HD55Y	IP 20	10	1	1	**VW3 A7 705**	11.000
ATV 71HD75Y, HD90Y	IP 20	5	1.3	1	**VW3 A7 707**	11.000
ATV 71HC11Y, HC13Y ATV 71QC11Y, QC13Y	IP 23	4.2	62	1	**VW3 A7 806**	126.000
ATV 71HC16Y, HC20Y ATV 71QC16Y, QC20Y	IP 23	8.1	44	2	**VW3 A7 805***(2)*	92.000
ATV 71HC25Y ATV 71QC25Y	IP 23	4.2	62	2	**VW3 A7 806** *(2)*	126.000
ATV 71HC31Y ATV 71QC31Y	IP 23	1.05	75	2	**VW3 A7 716** *(3)*	172.000
ATV 71HC40Y ATV 71QC40Y	IP 23	1.05	112	2	**VW3 A7 814** *(3)*	280.000
ATV 71HC50Y ATV 71QC50Y	IP 23	0.7	112	2	**VW3 A7 717** *(3)*	266.000
ATV 71HC63Y ATV 71QC63Y	IP 23	0.7	150	2	**VW3 A7 718** *(3)*	350.000

(1) Load factor for resistors: The value of the average power that can be dissipated at 50°C from the resistor into the casing is determined for a load factor during braking that corresponds to the majority of normal applications.
For VW3 A7 701…705 and 707:
- 2 s braking with a 0.6 Tn braking torque for a 40 s cycle
- 0.8 s braking with a 1.5 Tn braking torque for a 40 s cycle
For VW3 A7 716…718:
- 10 s braking with a 2 Tn braking torque for a 30 s cycle
For VW3 A7 805 and 806:
- 100 s braking with a 1 Tn braking torque for a 200 s cycle
- 20 s braking with a 1.6 Tn braking torque for a 200 s cycle
For VW3 A7 814:
- 10 s braking with a 2 Tn braking torque for a 240 s cycle
- 110 s braking with a 1.25 Tn braking torque for a 240 s cycle
(2) The two braking resistors must be connected in parallel. The dimensions of all the components must be taken into account as well as the required space of 300 mm to be left between each resistor (see our website www.schneider-electric.com).
(3) The two braking resistors must be connected in series. The dimensions of all the components must be taken into account as well as the required space of 300 mm to be left between each resistor (see our website www.schneider-electric.com).

Drive/option combinations:
pages 40 to 51

Variable speed drives
Altivar 71
Option: hoist resistors

Presentation

Hoist resistors are braking resistors which allow Altivar 71 drives to operate while braking to a standstill or during slowdown braking, by dissipating the braking energy.
They enable maximum transient braking torque.

The resistors are designed to be mounted on the outside of the enclosure, but should not inhibit natural cooling. Air inlets and outlets must not be obstructed in any way.
The air must be free of dust, corrosive gas and condensation.

The internal circuits of Altivar 71 drives rated 160 kW or less have a built-in dynamic brake transistor.

The resistors have IP 23 degree of protection (except for VW3 A7 801, which provide IP 23 protection when mounted horizontally and IP 20 in all other cases). Thermal protection is provided by a thermal overload relay.

***Note**: For ATV 71HC20N4...HC50N4, ATV 71QC16N4...QC50N4, ATV 71HC20Y...HC63Y and ATV 71QC20Y...QC63Y drives, a braking unit must be used (see page 64).*

Applications

Machines performing vertical movements, machines with fast cycles, high-inertia machines.

References

For drives	Ohmic value at 20°C	Average power available at 50°C *(1)*	Quantity required per drive	Reference	Weight
	Ω	kW			kg
Supply voltage: 200…240 V 50/60 Hz					
ATV 71H037M3, H075M3	100	1.6	1	**VW3 A7 801**	6.000
ATV 71HU15M3	60	5.6	1	**VW3 A7 802**	21.000
ATV 71HU22M3…HU40M3	24.5	9.8	1	**VW3 A7 803**	28.000
ATV 71HU55M3, HU75M3	14	22.4	1	**VW3 A7 804**	54.000
ATV 71HD11M3X, HD15M3X	8.1	44	1	**VW3 A7 805**	92.000
ATV 71HD18M3X	4.2	62	1	**VW3 A7 806**	126.000
ATV 71HD22M3X, HD30M3X	3.5	19.5	1	**VW3 A7 807**	51.000
ATV 71HD37M3X, HD45M3X	1.85	27.4	1	**VW3 A7 808**	94.000
ATV 71HD55M3X	1.8	30.6	1	**VW3 A7 809**	103.000
ATV 71HD75M3X	1.4	44	1	**VW3 A7 810**	119.000

(1) Operating factor for hoist resistors: The value of the average power that can be dissipated at 50°C from the resistor is determined by a load factor during braking.
For VW3 A7 801…808:
- 100 s braking with 1 Tn braking torque for a 200 s cycle
- 20 s braking with 1.6 Tn braking torque for a 200 s cycle
For VW3 A7 809 and VW3 A7 810 :
- 10 s braking with 2 Tn braking torque for a 240 s cycle
- 110 s braking with 1.25 Tn braking torque for a 240 s cycle

Drive/option combinations:
pages 40 to 51

Variable speed drives
Altivar 71
Option: hoist resistors

References (continued)

For drives	Ohmic value at 20°C	Average power available at 50°C *(1)*	Quantity required per drive	Reference	Weight
	Ω	kW			kg
Supply voltage: 380…480 V 50/60 Hz					
ATV 71H075N4…HU22N4 ATV 71W075N4…WU22N4 ATV 71P075N4Z…PU22N4Z	100	1.6	1	**VW3 A7 801**	6.000
ATV 71HU30N4…HU55N4 ATV 71WU30N4…WU55N4 ATV 71PU30N4Z…PU55N4Z	60	5.6	1	**VW3 A7 802**	21.000
ATV 71HU75N4, HD11N4 ATV 71WU75N4, WD11N4 ATV 71PD11N4Z	24.5	9.8	1	**VW3 A7 803**	28.000
ATV 71HD15N4…HD30N4 ATV 71WD15N4…WD30N4	14	22.4	1	**VW3 A7 804**	54.000
ATV 71HD37N4…HD55N4 ATV 71W37N4…WD55N4	8.1	44	1	**VW3 A7 805**	92.000
ATV 71HD75N4 ATV 71WD75N4	4.2	62	1	**VW3 A7 806**	126.000
ATV 71HD90N4 ATV 71QD90N4	2.75	56	1	**VW3 A7 811**	130.000
ATV 71HC11N4, HC13N4 ATV 71QC11N4, QC13N4	2.1	75	1	**VW3 A7 812**	181.000
ATV 71HC16N4 ATV 71QC16N4	2.1	112	1	**VW3 A7 813**	250.000
ATV 71HC20N4 ATV 71QC20N4	1.05	112	1	**VW3 A7 814**	280.000
ATV 71HC25N4, HC28N4 ATV 71QC25N4	1.05	150	1	**VW3 A7 815**	362.000
ATV 71HC31N4, HC40N4 ATV 71QC31N4, QC40N4	0.7	225	1	**VW3 A7 816**	543.000
ATV 71HC50N4 ATV 71QC50N4	0.7	330	1	**VW3 A7 817**	642.000
Supply voltage: 500…600 V 50/60 Hz					
ATV 71HU15S6X	100	1.4	1	**VW3 A7 801**	6.000
ATV 71HU22S6X ... HU75S6X	60	4.8	1	**VW3 A7 802**	21.000
Supply voltage: 500…690 V 50/60 Hz					
ATV 71HU22Y	100	1.6	1	**VW3 A7 801**	6.000
ATV 71HU30Y…HU55Y	60	5.6	1	**VW3 A7 802**	21.000
ATV 71HU75Y, HD11Y	24.5	9.8	1	**VW3 A7 803**	28.000
ATV 71HD15Y…HD30Y	14	22.4	1	**VW3 A7 804**	54.000
ATV 71HD37Y…HD55Y	8.1	44	1	**VW3 A7 805**	92.000
ATV 71HD75Y, HD90Y	5	70	1	**VW3 A7 818**	159.000
ATV 71HC11Y ATV 71QC11Y	4.2	62	1	**VW3 A7 806**	126.000
ATV 71HC13Y, HC16Y ATV 71QC13Y, QC16Y	8.1	44	2	**VW3 A7 805** *(2)*	92.000
ATV 71HC20Y ATV 71QC20Y	4.2	62	2	**VW3 A7 806** *(2)*	126.000
ATV 71HC25Y ATV 71QC25Y	1.05	75	2	**VW3 A7 716** *(3)*	172.000
ATV 71HC31Y ATV 71QC31Y	1.05	112	2	**VW3 A7 814** *(3)*	280.000
ATV 71HC40Y ATV 71QC40Y	0.7	112	2	**VW3 A7 717** *(3)*	266.000
ATV 71HC50Y ATV 71QC50Y	0.7	150	2	**VW3 A7 718** *(3)*	350.000
ATV 71HC63Y ATV 71QC63Y	0.7	225	2	**VW3 A7 816** *(3)*	543.000

(1) Operating factor for hoist resistors: The value of the average power that can be dissipated at 50°C from the resistor is determined by a load factor during braking.
For VW3 A7 716…718:
- 10 s braking with 2 Tn braking torque for a 30 s cycle
For VW3 A7 801…808 and VW3 A7 818:
- 100 s braking with 1 Tn braking torque for a 200 s cycle
- 20 s braking with 1.6 Tn braking torque for a 200 s cycle
For VW3 A7 809…817:
- 10 s braking with 2 Tn braking torque for a 240 s cycle
- 110 s braking with 1.25 Tn braking torque for a 240 s cycle

(2) The two braking resistors must be connected in parallel. The dimensions of all the components must be taken into account as well as the required space of 300 mm to be left between each resistor (see our website www.schneider-electric.com).

(3) The two braking resistors must be connected in series. The dimensions of all the components must be taken into account as well as the required space of 300 mm to be left between each resistor (see our website www.schneider-electric.com).

Variable speed drives
Altivar 71
Option: network braking units

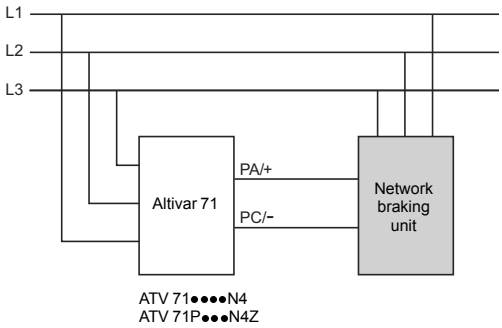

Presentation

Network braking units can be used to restore the following to the line supply:

- The energy from the motor
- The energy from the motors controlled by several drives connected on the same DC bus

One of the many advantages of a network braking unit is that it allows a very quick, yet smooth transition between starting and stopping. It is ideal for use in applications where high braking dynamics are required.
It is also very well suited to use on unstable power supplies.

It is available for **ATV 71●●●●N4** and **ATV 71P●●●N4Z** drives.

Depending on the braking time required, a specific idle time is necessary between two consecutive braking operations: see the characteristics curves on our website www.schneider-electric.com.

Network braking units provide IP 20 protection.

***Note**: For applications requiring a very low total current harmonic distortion (THDI) (< 4%), use the Active Front End (see page 72).*

Applications

Braking on a driving load:

- Vertical movements
- Escalators
- …

Drive/option combinations:
pages 40 to 51

Variable speed drives
Altivar 71
Option: network braking units

References

Line voltage: 400 V ∼

Maximum current Irms		Continuous braking power	Continuous braking power	Fast-acting semi-conductor fuses		Reference	Weight
∼	⎓			∼	∼		
A	A	kW	kW	A	V		kg
11	13	7	7	20	660	**VW3 A7 201**	20.000
20	24	13	13	30	690	**VW3 A7 202**	25.000
32	38	11	22	50	690	**VW3 A7 203**	26.000
48	58	21.5	33	80	690	**VW3 A7 204**	30.000
65	78	26	45	100	690	**VW3 A7 205**	32.000
102	123	40	70	160	660	**VW3 A7 206**	43.000
130	157	50	90	200	660	**VW3 A7 207**	48.000
195	236	60	135	315	660	**VW3 A7 208**	52.000
231	279	86	160	350	660	**VW3 A7 209**	90.000
289	350	120	200	400	1000	**VW3 A7 210**	100.000
360	433	135	250	500	1000	**VW3 A7 211**	115.000
500	600	200	345	630	1000	**VW3 A7 212**	125.000

Drive/option combinations:
pages 40 to 51

Variable speed drives
Altivar 71
Option: Active Front End



Active Front End
+
ATV 71HD90N4D

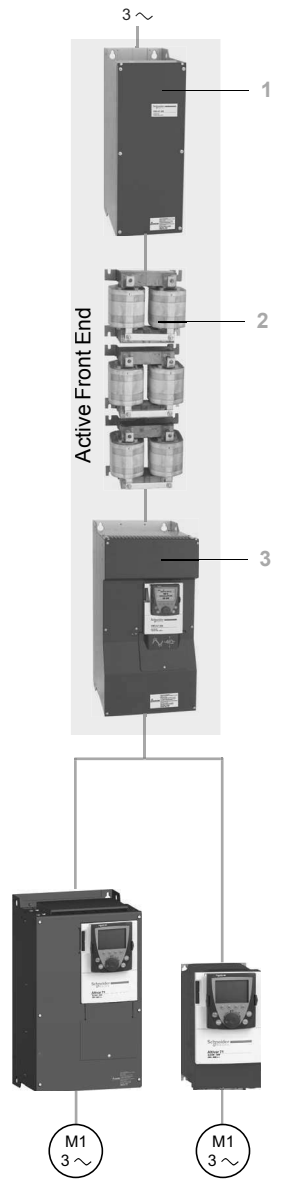

Active Front End
+
ATV 71HD22N4 + ATV 71HU22N4

Presentation

The Active Front End allows Altivar 71 drives to return energy to the line supply. With 4 quadrant-operation, the Active Front End is ideal for applications that allow a generator mode.

It is available for a range of drives between 0.75 kW and 630 kW with three types of 50/60 Hz power supply:
- 380…440 V three-phase
- 480 V three-phase
- 500…690 V three-phase

It has been developed to comply with European directives and to obtain CE marking.

Apart from the possibility of significantly reducing the level of harmonics, this technology offers several benefits:
- Increased application dynamics
- Operation on unstable line supplies
- Amplification of the input voltage
- Power factor (cos ϕ) of 1

The Active Front End consists of a set of three modules installed upstream of the drive between the line supply and the motor.
It is made up of the following elements:
- A **line filter** module **(LFM)** 1, used at the input, incorporating:
  - A charging circuit
  - A line contactor
  - An EMC filter
- A **line filter choke (LFC)** 2**,** consisting of three single-phase chokes, connected between the line filter module (LFM) and the active infeed converter (AIC)
- An **active infeed converter (AIC)** 3

The Active Front End powers the Altivar 71 drive via the common DC bus, while enabling it to return energy to the line supply. It is also used to:
- Limit the total current distortion factor (THDI) to less than 4%
- Supply direct current to several drives of different power ratings, operating in parallel, if required by the installation

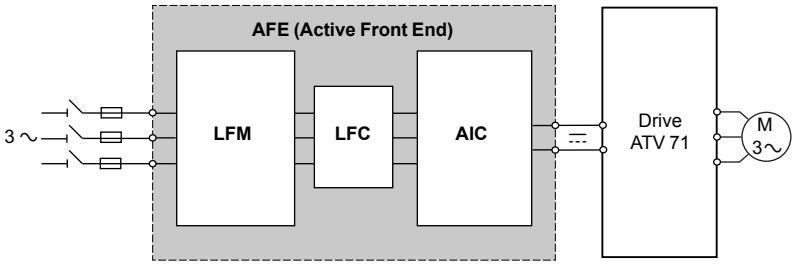

The Active Front End offers IP 00 protection. The ambient air temperature during operation must be between - 10°C and + 45°C (without derating, + 60°C with derating).

It is imperative that the protection of the Active Front End on the line supply side is supplemented by fuses for semi-conductors (to protect against short-circuits or a system failure).
The DC bus output only requires fuse protection if Active Front End modules are used in parallel.

Applications

Applications with energy return on driving load:
- Cranes, hoists, platform trucks (long travel), etc.
- Downhill conveyors, winches, escalators, etc.

Test benches and drives with high dynamics
Applications requiring a very low harmonic level
Applications with high inertia and strong dynamics

Drive/option combinations:
pages 40 to 51

Variable speed drives
Altivar 71
Option: Active Front End

References

For drives	Motor	Line supply	DC bus		Active Front End (1) (2)	Quantity per drive	Reference	Weight
	Power indicated on rating plate	Nominal line current 400 V	Maximum current	Continuous power 400 V				
	kW	A	A	kW				kg
Three-phase supply voltage: 380…440 V 50/60 Hz								
ATV 71H075N4… HD90N4D	0.75…90	177	185	120	AIC	1	**VW3 A7 250**	60.000
					LFC	1	**VW3 A7 265**	54.000
					LFM	1	**VW3 A7 260**	60.000
ATV 71HC11N4D	110	212	220	143	AIC	1	**VW3 A7 251**	74.000
					LFC	1	**VW3 A7 266**	69.000
					LFM	1	**VW3 A7 261**	80.000
ATV 71HC13N4D	132	255	265	172	AIC	1	**VW3 A7 252**	80.000
					LFC	1	**VW3 A7 266**	69.000
					LFM	1	**VW3 A7 261**	80.000
ATV 71HC16N4D	160	348	366	238	AIC	1	**VW3 A7 253**	110.000
					LFC	1	**VW3 A7 267**	132.000
					LFM	1	**VW3 A7 262**	125.000
ATV 71HC20N4D	200	395	412	268	AIC	1	**VW3 A7 254**	140.000
					LFC	1	**VW3 A7 267**	132.000
					LFM	1	**VW3 A7 262**	125.000
ATV 71HC25N4D	250	495	517	336	AIC	1	**VW3 A7 255**	140.000
					LFC	1	**VW3 A7 267**	132.000
					LFM	1	**VW3 A7 262**	125.000
ATV 71HC28N4D	280	558	581	378	AIC	1	**VW3 A7 256**	215.000
					LFC	2	**VW3 A7 267**	132.000
					LFM	2	**VW3 A7 262**	125.000
ATV 71HC31N4D	315	628	654	425	AIC	1	**VW3 A7 256**	215.000
					LFC	2	**VW3 A7 267**	132.000
					LFM	2	**VW3 A7 262**	125.000
ATV 71HC40N4D	400	780	815	530	AIC	1	**VW3 A7 257**	225.000
					LFC	2	**VW3 A7 267**	132.000
					LFM	2	**VW3 A7 262**	125.000
ATV 71HC50N4D	500	980	1023	665	AIC	1	**VW3 A7 258**	300.000
					LFC	2	**VW3 A7 267**	132.000
					LFM	2	**VW3 A7 262**	125.000

Dimensions (overall)

Active infeed converter (AIC)	W x H x D mm
VW3 A7 250	310 x 680 x 377
VW3 A7 251	350 x 782 x 377
VW3 A7 252	330 x 950 x 377
VW3 A7 253	430 x 950 x 377
VW3 A7 254	585 x 950 x 377
VW3 A7 255	585 x 950 x 377
VW3 A7 256	880 x 1150 x 377
VW3 A7 257	880 x 1150 x 377
VW3 A7 258	1110 x 1150 x 377

Line choke (LFC)	W x H x D mm
VW3 A7 265	835 x 210 x 185
VW3 A7 266	835 x 295 x 195
VW3 A7 267	970 x 360 x 255

Line filter (LFM)	W x H x D mm
VW3 A7 260	240 x 680 x 379
VW3 A7 261	290 x 730 x 379
VW3 A7 262	290 x 1100 x 379

(1) For more information about the Active Front End, please refer to the programming manual or visit our website www.schneider-electric.com.
(2) AIC = active infeed converter; LFC = line filter choke; LFM = line filter module.

Variable speed drives
Altivar 71
Option: Active Front End

References (continued)

For drives	Motor	Line supply	DC bus		Active Front End *(1) (2)*	Quantity per drive	Reference	Weight
	Power indicated on rating plate	Nominal line current 480 V	Maximum current	Continuous power 480 V				
	HP	A	A	kW				kg
Three-phase supply voltage: 480 V 50/60 Hz								
ATV 71H075N4… HD90N4D	*1…125*	160	163	120	AIC	1	**VW3 A7 250**	60.000
					LFC	1	**VW3 A7 265**	54.000
					LFM	1	**VW3 A7 260**	60.000
ATV 71HC11N4D	*150*	200	203	143	AIC	1	**VW3 A7 251**	74.000
					LFC	1	**VW3 A7 266**	69.000
					LFM	1	**VW3 A7 261**	80.000
ATV 71HC13N4D	*200*	200	203	172	AIC	1	**VW3 A7 252**	80.000
					LFC	1	**VW3 A7 266**	69.000
					LFM	1	**VW3 A7 261**	80.000
ATV 71HC16N4D	*250*	348	366	238	AIC	1	**VW3 A7 283**	110.000
					LFC	1	**VW3 A7 267**	132.000
					LFM	1	**VW3 A7 262**	125.000
ATV 71HC20N4D	*300*	395	412	268	AIC	1	**VW3 A7 254**	140.000
					LFC	1	**VW3 A7 267**	132.000
					LFM	1	**VW3 A7 262**	125.000
ATV 71HC25N4D	*400*	495	517	336	AIC	1	**VW3 A7 255**	140.000
					LFC	1	**VW3 A7 267**	132.000
					LFM	1	**VW3 A7 262**	125.000
ATV 71HC28N4D	*450*	558	581	378	AIC	1	**VW3 A7 286**	215.000
					LFC	2	**VW3 A7 267**	132.000
					LFM	2	**VW3 A7 262**	125.000
ATV 71HC31N4D	*500*	628	654	425	AIC	1	**VW3 A7 286**	215.000
					LFC	2	**VW3 A7 267**	132.000
					LFM	2	**VW3 A7 262**	125.000
ATV 71HC40N4D	*600*	780	815	530	AIC	1	**VW3 A7 287**	225.000
					LFC	2	**VW3 A7 267**	132.000
					LFM	2	**VW3 A7 262**	125.000
ATV 71HC50N4D	*700*	980	1023	665	AIC	1	**VW3 A7 258**	300.000
					LFC	2	**VW3 A7 267**	132.000
					LFM	2	**VW3 A7 262**	125.000

Dimensions (overall)

Active infeed converter (AIC)	W x H x D mm
VW3 A7 250	310 x 680 x 377
VW3 A7 251	350 x 782 x 377
VW3 A7 252	330 x 950 x 377
VW3 A7 283	585 x 950 x 377
VW3 A7 254	585 x 950 x 377
VW3 A7 255	585 x 950 x 377
VW3 A7 286	1110 x 1150 x 377
VW3 A7 287	1110 x 1150 x 377
VW3 A7 258	1110 x 1150 x 377

Line choke (LFC)	W x H x D mm
VW3 A7 265	835 x 210 x 185
VW3 A7 266	835 x 295 x 195
VW3 A7 267	970 x 360 x 255

Line filter (LFM)	W x H x D mm
VW3 A7 260	240 x 680 x 379
VW3 A7 261	290 x 730 x 379
VW3 A7 262	290 x 1100 x 379

(1) For more information about the Active Front End, please refer to the programming manual or visit our website www.schneider-electric.com.
(2) AIC = active infeed converter; LFC = line filter choke; LFM = line filter module.

Variable speed drives
Altivar 71
Option: Active Front End

References (continued)

For drives	Motor	Line supply	DC bus				Active Front End (1) (2)	Quantity per drive	Reference	Weight
	Power indicated on rating plate	Maximum nominal line current 500 V…690 V	Maximum current	Continuous power						
				500 V	600 V	690 V				
	kW	A	A	kW	kW	kW				kg
Three-phase supply voltage: 500…690 V 50/60 Hz										
ATV 71HC11Y	110	120	130	102	123	142	AIC	1	**VW3 A7 270**	110.000
							LFC	1	**VW3 A7 268**	99.000
							LFM	1	**VW3 A7 263**	80.000
ATV 71HC13Y	132	150	156	127	153	172	AIC	1	**VW3 A7 271**	110.000
							LFC	1	**VW3 A7 268**	99.000
							LFM	1	**VW3 A7 263**	80.000
ATV 71HC16Y	160	185	195	157	188	215	AIC	1	**VW3 A7 272**	110.000
							LFC	1	**VW3 A7 268**	99.000
							LFM	1	**VW3 A7 263**	80.000
ATV 71HC20Y	200	228	244	193	230	268	AIC	1	**VW3 A7 273**	190.000
							LFC	1	**VW3 A7 269**	210.000
							LFM	1	**VW3 A7 264**	125.000
ATV 71HC25Y	250	285	305	242	290	335	AIC	1	**VW3 A7 274**	190.000
							LFC	1	**VW3 A7 269**	210.000
							LFM	1	**VW3 A7 264**	125.000
ATV 71HC31Y	315	360	386	305	365	424	AIC	1	**VW3 A7 275**	190.000
							LFC	1	**VW3 A7 269**	210.000
							LFM	1	**VW3 A7 264**	125.000
ATV 71HC40Y	400	450	481	382	460	528	AIC	1	**VW3 A7 276**	400.000
							LFC	2	**VW3 A7 269**	210.000
							LFM	2	**VW3 A7 264**	125.000
ATV 71HC50Y	500	563	604	478	575	663	AIC	1	**VW3 A7 277**	400.000
							LFC	2	**VW3 A7 269**	210.000
							LFM	2	**VW3 A7 264**	125.000
ATV 71HC63Y	630	715	765	607	730	842	AIC	1	**VW3 A7 278**	400.000
							LFC	2	**VW3 A7 269**	210.000
							LFM	2	**VW3 A7 264**	125.000

Dimensions (overall)

Active infeed converter (AIC)	W x H x D mm
VW3 A7 270	330 x 1190 x 377
VW3 A7 271	330 x 1190 x 377
VW3 A7 272	330 x 1190 x 377
VW3 A7 273	585 x 1190 x 377
VW3 A7 274	585 x 1190 x 377
VW3 A7 275	585 x 1190 x 377
VW3 A7 276	1110 x 1390 x 377
VW3 A7 277	1110 x 1390 x 377
VW3 A7 278	1110 x 1390 x 377

Line choke (LFC)	W x H x D mm
VW3 A7 268	835 x 295 x 210
VW3 A7 269	985 x 540 x 250

Line filter (LFM)	W x H x D mm
VW3 A7 263	290 x 730 x 370
VW3 A7 264	290 x 1100 x 390

(1) For more information about the Active Front End, please refer to the programming manual or visit our website www.schneider-electric.com.
(2) AIC = active infeed converter; LFC = line filter choke; LFM = line filter module.

Drive/option combinations:
pages 40 to 51

Variable speed drives
Altivar 71: reduction of current harmonics
Option: DC chokes

Depending on the line supply, the main solutions for reducing current harmonics are as follows:
- DC chokes *(1)* (see page 77)
- Line chokes *(1)* (see page 78)
- 16% and 10% passive filters *(1)* (see page 81)
- Use of passive filters with a DC choke (see page 81)

These four solutions can be used on the same installation *(1)*.
It is always easier and less expensive to deal with current harmonics at installation level as a whole rather than at the level of each individual device, particularly when using passive filters and active compensators.

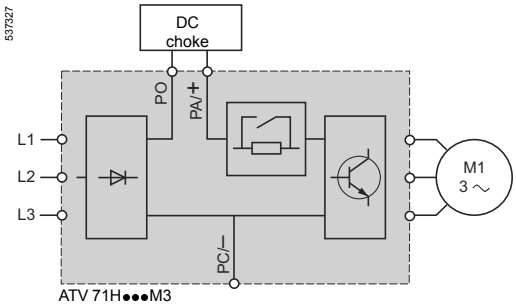

ATV 71H●●●M3
ATV 71HD11M3X…HD45M3X
ATV 71H075N4…HD75N4

Presentation

DC chokes are used to reduce current harmonics in order to comply with standard IEC 61000-3-12 for drives in which the line current is more than 16 A and less than 75 A.

Using a DC choke with the drive complies with standard IEC 61000-3-12 provided that the RSCE ⩾ 120 at the point of connection to the public power supply.

It is the responsibility of the installer or the user to ensure that the device is connected correctly to a connection point with an RSCE ⩾ 120.
The DC choke is connected to the drive power terminals.

The DC choke is supplied as standard with ATV 71HD55M3X, HD75M3X and ATV 71HD90N4…HC50N4 drives.

It is compulsory for ATV 71P●●●N4Z drives if they do not have a fan (see page 27).

It provides IP 20 degree of protection.

Applications

Reduction of current harmonics.
Reduction of the THDI to 5% or 10% when used with passive filters (see pages 82 and 83).
Maintaining the motor torque in relation to the line inductance.

(1) For ATV 71H●●●S6X and ATV 71HU22Y…HD90Y drives, only line chokes are recommended.
They are mandatory for ATV 71QD90N4…QC50N4, ATV 71HC11Y…HC63Y and ATV 71QC11Y…QC63Y drives (see page 78).

Drive/option combinations:
pages 40 to 51

Variable speed drives
Altivar 71: reduction of current harmonics
Option: DC chokes

References *(1)*

For drives	Inductance value	Nominal current	Loss	THDI *(2)*	Reference	Weight
	mH	A	W			kg
Three-phase supply voltage: 200…240 V 50/60 Hz						
ATV 71H037M3	18	22.5	7.7	36.3	**VW3 A4 501**	0.650
ATV 71H075M3	6.8	8	22.5	41.27	**VW3 A4 503**	1.700
ATV 71HU15M3	3.2	14.3	32	42.4	**VW3 A4 505**	2.200
ATV 71HU22M3	2.2	19.2	33	43.33	**VW3 A4 506**	2.500
ATV 71HU30M3	1.6	27.4	43	43.22	**VW3 A4 507**	3.000
ATV 71HU40M3	1.2	44	61	43.91	**VW3 A4 508**	4.300
ATV 71 HU55M3	1.2	44	61	38		
ATV 71HU75M3	0.7	36	30.5	43.96	**VW3 A4 509**	2.500
ATV 71HD11M3X	0.52	84.5	77	38.14	**VW3 A4 510**	6.400
ATV 71HD15M3X	0.52	84.5	77	35.34		
ATV 71HD18M3X	0.22	171.2	86	32.31	**VW3 A4 511**	17.850
ATV 71HD22M3X	0.22	171.2	86	36.62		
ATV 71HD30M3X	0.09	195	73	43.51	**VW3 A4 512**	10.000
ATV 71 HD37M3X	0.09	195	73	39.24		
ATV 71HD45M3X	0.09	195	73	35.7		
Three-phase supply voltage: 380…480 V 50/60 Hz						
ATV 71H075N4 ATV 71W075N4 ATV 71P075N4Z	18	2.25	7.7	44.95	**VW3 A4 501**	0.650
ATV 71HU15N4 ATV 71WU15N4 ATV 71PU15N4Z	10	4.3	11	45.48	**VW3 A4 502**	1.000
ATV 71HU22N4 ATV 71WU22N4 ATV 71PU22N4Z	6.8	8	22.5	45	**VW3 A4 503**	1.700
ATV 71HU30N4 ATV 71WU30N4 ATV 71PU30N4Z	6.8	8	22.5	40.08		
ATV 71HU40N4 ATV 71WU40N4 ATV 71PU40N4Z	3.9	10.7	27	44.72	**VW3 A4 504**	1.650
ATV 71HU55N4 ATV 71WU55N4 ATV 71PU55N4Z	3.2	14.3	32	45.19	**VW3 A4 505**	2.200
ATV 71HU75N4 ATV 71WU75N4 ATV 71PU75N4Z	2.2	19.2	33	42.25	**VW3 A4 506**	2.500
ATV 71HD11N4 ATV 71WD11N4 ATV 71PD11N4Z	1.6	27.4	43	43.1	**VW3 A4 507**	3.000
ATV 71HD15N4 ATV 71WD15N4	1.2	44	57.5	43.06	**VW3 A4 508**	4.300
ATV 71HD18N4 ATV 71WD18	1.2	44	57.5	35.23		
ATV 71HD22N4 ATV 71WD22N4	0.52	84.5	98.3	40.4	**VW3 A4 510**	6.400
ATV 71HD30N4 ATV 71WD30N4	0.52	84.5	98.3	36.99		
ATV 71HD37N4 ATV 71WD37N4	0.52	84.5	98.3	35.13		
ATV 71HD45N4 ATV 71WD45N4	0.22	171.2	128	45.59	**VW3 A4 511**	17.850
ATV 71HD55N4 ATV 71WD55N4	0.22	171.2	128	39.29		
ATV 71HD75N4 ATV 71WD75N4	0.22	171.2	128	36.2		

(1) The DC choke is supplied as standard with ATV 71HD55M3X, HD75M3X and ATV 71HD90N4…HC50N4 drives.
(2) Total current harmonic distortion in accordance with IEC 61000-3-12.

Drive/option combinations:
pages 40 to 51

Variable speed drives
Altivar 71: reduction of current harmonics
Option: line chokes

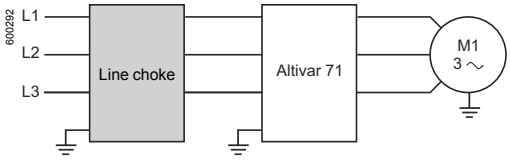

Presentation

Line chokes are used to provide improved protection against overvoltages on the line supply and to reduce harmonic distortion of the current produced by the drive.

The recommended chokes limit the line current.
They have been developed in line with standard IEC 61800-5-1 (VDE 0160 level 1 high-energy overvoltages on the line supply).

The choke values are defined for a phase-to-phase voltage drop of between 3% and 5% of the nominal supply voltage. Values higher than this will cause loss of torque.

Line chokes are mandatory:
- For ATV 71HU40M3…HU75M3 drives powered by a 200…240 V 50/60 Hz single-phase supply voltage
- For ATV 71QD90N4…QC50N4, ATV 71HC11Y…HC63Y and ATV 71QC11Y…QC63Y drives

Their use is recommended with ATV 71H●●●S6X and ATV 71HU22Y…HD90Y drives.

They can also be used instead of a DC choke with ATV 71H●●●M3 drives powered by a 200…240 V 50/60 Hz three-phase supply and ATV 71H●●●M3X, ATV 71●●●●N4 and ATV 71P●●●●N4Z drives.

***Note**: ATV 71HD90N4...HC50N4, supplied as standard with a DC choke, can be ordered without a choke by adding the letter D at the end of the reference (see page 22).*

Chokes must be installed upstream of the drive.

Applications

The use of line chokes is recommended in particular under the following circumstances:
- Close connection of several drives in parallel
- Line supply with significant disturbance from other equipment (interference, overvoltages)
- Line supply with voltage imbalance between phases that is more than 1.8% of the nominal voltage
- Drive supplied by a line with very low impedance (in the vicinity of power transformers 10 times more powerful than the drive rating)
- Installation of a large number of frequency inverters on the same line
- Reduction of overloads on the cos φ correction capacitors, if the installation includes a power factor correction unit

Drive/option combinations:
pages 40 to 51

Variable speed drives

Altivar 71: reduction of current harmonics

Option: line chokes

PF107532



VW3 A4 572

References

For drives	Line supply Isc	Line choke				Quantity required per drive	Reference	Weight
		Inductance value	Nominal current	Saturation current	Loss			
	kA	mH	A	A	W			kg
Single-phase supply voltage: 200…240 V 50/60 Hz								
ATV 71HU40M3 *(1)*	5	2	25	–	45	1	**VW3 A58501**	3.500
ATV 71HU55M3 *(1)*	5	1	45	–	50	1	**VW3 A58502**	3.500
ATV 71HU75M3 *(1)*	22	1	45	–	50	1	**VW3 A58502**	3.500
Three-phase supply voltage: 200…240 V 50/60 Hz								
ATV 71H037M3, H075M3	5	10	4	–	45	1	**VW3 A4 551**	1.500
ATV 71HU15M3, HU22M3	5	4	10	–	65	1	**VW3 A4 552**	3.000
ATV 71HU30M3	5	2	16	–	75	1	**VW3 A4 553**	3.500
ATV 71HU40M3	5	1	30	–	90	1	**VW3 A4 554**	6.000
ATV 71HU55M3	22	1	30	–	90	1	**VW3 A4 554**	6.000
ATV 71HU75M3, HD11M3X	22	0.5	60	–	94	1	**VW3 A4 555**	11.000
ATV 71HD15M3X	22	0.3	100	–	260	1	**VW3 A4 556**	16.000
ATV 71HD18M3X…HD45M3X	22	0.15	230	–	400	1	**VW3 A4 557**	45.000
ATV 71HD55M3X	35	0.049	429	855	278	1	**VW3 A4 562**	50.000
ATV 71HD75M3X	35	0.038	509	1025	280	1	**VW3 A4 563**	59.000
Three-phase supply voltage: 380…480 V 50/60 Hz								
ATV 71H075N4, HU15N4 ATV 71W075N4, WU15N4 ATV 71P075N4Z, PU15N4Z	5	10	4	–	45	1	**VW3 A4 551**	1.500
ATV 71HU22N4…HU40N4 ATV 71WU22N4…WU40N4 ATV 71PU22N4Z…PU40N4Z	5	4	10	–	65	1	**VW3 A4 552**	3.000
ATV 71HU55N4, HU75N4 ATV 71WU55N4, WU75N4 ATV 71PU55N4Z, PU75N4Z	22	2	16	–	75	1	**VW3 A4 553**	3.500
ATV 71HD11N4, HD15N4 ATV 71WD11N4, WD15N4 ATV 71PD11N4Z	22	1	30	–	90	1	**VW3 A4 554**	6.000
ATV 71HD18N4, HD22N4 ATV 71WD18N4, WD22N4	22	0.5	60	–	94	1	**VW3 A4 555**	11.000
ATV 71HD30N4…HD55N4 ATV 71WD30N4…WD55N4	22	0.3	100	–	260	1	**VW3 A4 556**	16.000
ATV 71HD75N4 ATV 71WD75N4	22	0.155	184	370	220	1	**VW3 A4 558**	31.000
ATV 71HD90N4	35	0.155	184	370	220	1	**VW3 A4 558**	31.000
ATV 71HC11N4	35	0.12	222	445	278	1	**VW3 A4 559**	35.000
ATV 71HC13N4	35	0.098	264	530	245	1	**VW3 A4 560**	43.000
ATV 71HC16N4	50	0.066	344	685	258	1	**VW3 A4 561**	47.000
ATV 71HC20N4	50	0.060	450	850	335	1	**VW3 A4 569**	70.000
ATV 71HC25N4, HC28N4	50	0.038	613	1150	307	1	**VW3 A4 564**	73.000
ATV 71HC31N4	50	0.032	720	1352	428	1	**VW3 A4 565**	82.000
ATV 71HC40N4	50	0.060	450	850	335	2	**VW3 A4 569**	70.000
ATV 71HC50N4	50	0.038	613	1150	307	2	**VW3 A4 564**	73.000

(1) Use of a line choke is recommended.

Drive/option combinations:
pages 40 to 51

Variable speed drives
Altivar 71: reduction of current harmonics
Option: line choke

References (continued)

For drives	Line supply Isc	Line choke				Quantity required per drive	Reference	Weight
		Inductance value	Nominal current	Saturation current	Loss			
	kA	mH	A	A	W			kg
Three-phase supply voltage: 380…480 V 50/60 Hz (continued)								
ATV 71QD90N4 *(1)*	35	0.12	222	445	278	1	**VW3 A4 559**	35.000
ATV 71QC11N4 *(1)*	35	0.098	264	530	245	1	**VW3 A4 560**	43.000
ATV 71QC13N4 *(1)*	35	0.085	300	570	315	1	**VW3 A4 568**	46.000
ATV 71QC16N4 *(1)*	50	0.066	344	685	258	1	**VW3 A4 561**	47.000
ATV 71QC20N4 *(1)*	50	0.06	450	850	335	1	**VW3 A4 569**	70.000
ATV 71QC25N4 *(1)*	50	0.038	613	1150	307	1	**VW3 A4 564**	73.000
ATV 71QC31N4 *(1)*	50	0.066	344	685	258	2	**VW3 A4 561**	47.000
ATV 71QC40N4 *(1)*	50	0.038	513	1025	320	2	**VW3 A4 563**	55.000
ATV 71QC50N4 *(1)*	50	0.026	590	1180	320	2	**VW3 A4 573**	60.000
Three-phase supply voltage: 500…600 V 50/60 Hz								
ATV 71HU15S6X...HU22S6X	22	10	4	–	45	1	**VW3 A4 551**	1.500
ATV 71HU30S6X...HU55S6X	22	4	10	–	65	1	**VW3 A4 552**	3.000
ATV 71HU75S6X	22	2	16	–	75	1	**VW3 A4 553**	3.500
Three-phase supply voltage: 500…690 V 50/60 Hz								
ATV 71HU22Y…HU40Y *(2)*	22	10	4	–	45	1	**VW3 A4 551**	1.500
ATV 71HD11Y, HD15Y *(2)*	22	2	16	–	75	1	**VW3 A4 553**	3.500
ATV 71HD18Y, HD22Y *(2)*	22	1	30	–	90	1	**VW3 A4 554**	6.000
ATV 71HD30Y…HD45Y *(2)*	22	0.5	60	–	94	1	**VW3 A4 555**	11.000
ATV 71HD55Y…HD90Y *(2)*	22	0.3	100	–	260	1	**VW3 A4 556**	16.000
ATV 71HC11Y *(1)* ATV 71QC11Y *(1)*	28	0.22	152	320	220	1	**VW3 A4 570**	28.000
ATV 71HC13Y *(1)* ATV 71QC13Y *(1)*	28	0.23	220	405	330	1	**VW3 A4 571**	79.000
ATV 71HC16Y *(1)* ATV 71QC16Y *(1)*	35	0.23	220	405	330	1	**VW3 A4 571**	79.000
ATV 71HC20Y *(1)* ATV 71QC20Y *(1)*	35	0.098	264	530	245	1	**VW3 A4 560**	35.000
ATV 71HC25Y, HC31Y *(1)* ATV 71QC25Y, QC31Y *(1)*	35	0.1	428	770	495	1	**VW3 A4 572**	90.000
ATV 71HC40Y *(1)* ATV 71QC40Y *(1)*	35	0.085	300	474	315	2	**VW3 A4 568**	46.000
ATV 71HC50Y *(1)* ATV 71QC50Y *(1)*	35	0.1	428	770	495	2	**VW3 A4 572**	90.000
ATV 71HC63Y *(1)* ATV 71QC63Y *(1)*	42	0.1	428	770	495	2	**VW3 A4 572**	90.000

(1) Use of a line choke is mandatory.

(2) Use of a line choke is recommended.

Drive/option combinations:
pages 40 to 51

Variable speed drives

Altivar 71: reduction of current harmonics

Option: passive filters

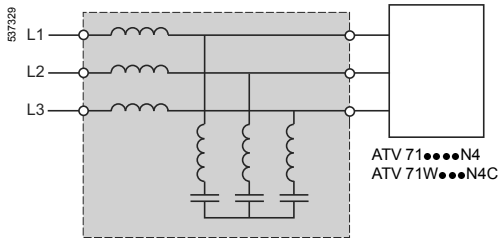

Passive filter

Presentation

Passive filters are used to reduce current harmonics with total harmonic distortion factors of less than 16% or 10%.

These performance levels can be improved still further and the harmonic distortion reduced to less than 10% or 5% if the filter is used with a DC choke (see pages 82 and 83).

The reactive power increases at no load or low load. To eliminate this reactive power, the filter capacitors can be disconnected via the drive (see the diagrams on our website www.schneider-electric.com or refer to the Programming Manual).

The passive filters provide IP 20 protection.

ATV 71H●●●Y, ATV 71Q●●●Y and ATV 71H●●●S6X drives are not compatible with the use of passive filters. It is recommended or mandatory, depending on the rating, to use a line choke (see page 78).

Applications

Reduction of current harmonics in order to use drives in the first environment (restricted distribution, for domestic use, sale conditional on the competence of the user and the distributor in terms of reduction of current harmonics).

Drive/option combinations:
pages 40 to 51

Variable speed drives
Altivar 71: reduction of current harmonics
Option: passive filters

Passive filters: 400 V 50 Hz three-phase power supply

Motor rating		For drives	Line supply	Filter	Quantity required per drive	Reference	Weight
			Line current	In (2)			
kW	HP		A	A			kg
THDI 16% (1)							
0.75	1	ATV 71H075N4 ATV 71W075N4 ATV 71P075N4Z	2.5	6	1	**VW3 A4 601**	15.000
1.5	2	ATV 71HU15N4 ATV 71WU15N4 ATV 71PU15N4Z	3.6	6	1	**VW3 A4 601**	15.000
2.2	3	ATV 71HU22N4 ATV 71WU22N4 ATV 71PU22N4Z	5	6	1	**VW3 A4 601**	15.000
3	–	ATV 71HU30N4 ATV 71WU30N4 ATV 71PU30N4Z	6	6	1	**VW3 A4 601**	15.000
4	5	ATV 71HU40N4 ATV 71WU40N4 ATV 71PU40N4Z	7.8	10	1	**VW3 A4 602**	19.000
5.5	7.5	ATV 71HU55N4 ATV 71WU55N4 ATV 71PU55N4Z	10	10	1	**VW3 A4 602**	19.000
7.5	10	ATV 71HU75N4 ATV 71WU75N4 ATV 71PU75N4Z	14	19	1	**VW3 A4 603**	21.000
11	15	ATV 71HD11N4 ATV 71WD11N4 ATV 71PD11N4Z	19	19	1	**VW3 A4 603**	21.000
15	20	ATV 71HD15N4 ATV 71WD15N4	26	26	1	**VW3 A4 604**	22.000
18.5	25	ATV 71HD18N4 ATV 71WD18N4	32	35	1	**VW3 A4 605**	34.000
22	30	ATV 71HD22N4 ATV 71WD22N4	38	43	1	**VW3 A4 606**	38.000
30	40	ATV 71HD30N4 ATV 71WD30N4	52	72	1	**VW3 A4 607**	56.000
37	50	ATV 71HD37N4 ATV 71WD37N4	63	72	1	**VW3 A4 607**	56.000
45	60	ATV 71HD45N4 ATV 71WD45N4	77	101	1	**VW3 A4 608**	69.000
55	75	ATV 71HD55N4 ATV 71WD55N4	91	101	1	**VW3 A4 608**	69.000
75	100	ATV 71HD75N4 ATV 71WD75N4	126	144	1	**VW3 A4 609**	97.000
THDI 10%							
90	125	ATV 71HD90N4 ATV 71QC90N4	149	144	1	**VW3 A4 609**	97.000
110	150	ATV 71HC11N4 ATV 71QC11N4	182	180	1	**VW3 A4 610**	103.000
132	200	ATV 71HC13N4 ATV 71QC13N4	218	216	1	**VW3 A4 611**	112.000
160	250	ATV 71HC16N4 ATV 71QC16N4	287	289	1	**VW3 A4 612**	135.000
200	300	ATV 71HC20N4 ATV 71QC20N4	353.5	370	1	**VW3 A4 613**	155.000
220	350	ATV 71HC25N4 ATV 71QC25N4	364	370	1	**VW3 A4 613**	155.000
250	400	ATV 71HC25N4 ATV 71QC25N4	415	216	2	**VW3 A4 611**	112.000
280	450	ATV 71HC28N4	485	289	2	**VW3 A4 612**	135.000
315	500	ATV 71HC31N4 ATV 71QC31N4	543	289	2	**VW3 A4 612**	135.000
355	–	ATV 71HC40N4 ATV 71QC40N4	588	289	2	**VW3 A4 612**	135.000
400	600	ATV 71HC40N4 ATV 71QC40N4	664	325	2	**VW3 A4 619**	155.000
500	700	ATV 71HC50N4 ATV 71QC50N4	840	289	3	**VW3 A4 612**	135.000

*(1) By adding a DC choke (see page 76) to **ATV 71●075N4…●D75N4** and **ATV 71P●●●N4Z** drives, a total current harmonic distortion (THD) ⩽ 10% is obtained.*
*This DC choke is supplied as standard with **ATV 71HD90N4…HC50N4** drives.*
These reduced current harmonics are achieved for the nominal filter current only as long as the total voltage harmonic distortion (THDU) is < 2% and the short-circuit ratio (RSCE) is > 66.

(2) In: Nominal filter current.

Variable speed drives

Altivar 71: reduction of current harmonics

Option: passive filters

Passive filters: 400 V 50 Hz three-phase power supply							
Motor rating		**For drives**	**Line supply**	**Filter**	**Quantity required per drive**	**Reference**	**Weight**
			Line current	**In** *(2)*			
kW	***HP***		**A**	**A**			**kg**
THDI 10% *(1)*							
0.75	*1*	ATV 71H075N4 ATV 71W075N4 ATV 71P075N4Z	2.5	6	1	**VW3 A4 621**	21.000
1.5	*2*	ATV 71HU15N4 ATV 71WU15N4 ATV 71PU15N4Z	3.6	6	1	**VW3 A4 621**	21.000
2.2	*3*	ATV 71HU22N4 ATV 71WU22N4 ATV 71PU22N4Z	5	6	1	**VW3 A4 621**	21.000
3	–	ATV 71HU30N4 ATV 71WU30N4 ATV 71PU30N4Z	6	6	1	**VW3 A4 621**	21.000
4	*5*	ATV 71HU40N4 ATV 71WU40N4 ATV 71PU40N4Z	7.8	10	1	**VW3 A4 622**	27.000
5.5	*7.5*	ATV 71HU55N4 ATV 71WU55N4 ATV 71PU55N4Z	10	10	1	**VW3 A4 622**	27.000
7.5	*10*	ATV 71HU75N4 ATV 71WU75N4 ATV 71PU75N4Z	14	19	1	**VW3 A4 623**	28.000
11	*15*	ATV 71HD11N4 ATV 71WD11N4 ATV 71PD11N4Z	19	19	1	**VW3 A4 623**	28.000
15	*20*	ATV 71HD15N4 ATV 71WD15N4	26	26	1	**VW3 A4 624**	40.000
18.5	*25*	ATV 71HD18N4 ATV 71WD18N4	32	35	1	**VW3 A4 625**	49.000
22	*30*	ATV 71HD22N4 ATV 71WD22N4	38	43	1	**VW3 A4 626**	52.000
30	*40*	ATV 71HD30N4 ATV 71WD30N4	52	72	1	**VW3 A4 627**	88.000
37	*50*	ATV 71HD37N4 ATV 71WD37N4	63	72	1	**VW3 A4 627**	88.000
45	*60*	ATV 71HD45N4 ATV 71WD45N4	77	101	1	**VW3 A4 628**	150.000
55	*75*	ATV 71HD55N4 ATV 71WD55N4	91	101	1	**VW3 A4 628**	150.000
75	*100*	ATV 71HD75N4 ATV 71WD75N4	126	144	1	**VW3 A4 629**	167.000
THDI 5%							
90	*125*	ATV 71HD90N4 ATV 71QC90N4	149	144	1	**VW3 A4 629**	167.000
110	*150*	ATV 71HC11N4 ATV 71QC11N4	182	180	1	**VW3 A4 630**	178.000
132	*200*	ATV 71HC13N4 ATV 71QC13N4	218	216	1	**VW3 A4 631**	224.000
160	*250*	ATV 71HC16N4 ATV 71QC16N4	287	289	1	**VW3 A4 632**	271.000
200	*300*	ATV 71HC20N4 ATV 71QC20N4	353.5	370	1	**VW3 A4 633**	320.000
220	*350*	ATV 71HC25N4 ATV 71QC25N4	364	370	1	**VW3 A4 633**	320.000
250	*400*	ATV 71HC25N4 ATV 71QC25N4	415	216	2	**VW3 A4 631**	224.000
280	*450*	ATV 71HC28N4	485	289	2	**VW3 A4 632**	271.000
315	*500*	ATV 71HC31N4 ATV 71QC31N4	543	289	2	**VW3 A4 632**	271.000
355	–	ATV 71HC40N4 ATV 71QC40N4	588	289	2	**VW3 A4 632**	271.000
400	*600*	ATV 71HC40N4 ATV 71QC40N4	664	325	2	**VW3 A4 639**	284.000
500	*700*	ATV 71HC50N4 ATV 71QC50N4	840	289	3	**VW3 A4 632**	271.000

*(1) By adding a DC choke (see page 76) to **ATV 71●075N4…●D75N4** and **ATV 71P●●●N4Z** drives, a total current harmonic distortion (THD) ⩽ 5% is obtained.*
*This DC choke is supplied as standard with **ATV 71HD90N4…HC50N4** drives.*
These reduced current harmonics are achieved for the nominal filter current only as long as the total voltage harmonic distortion (THDU) is < 2% and the short-circuit ratio (RSCE) is > 66.

(2) In: Nominal filter current.

Variable speed drives
Altivar 71: EMC filters
Integrated filters and optional additional filters

Integrated EMC filters

Altivar 71 drives (excluding the ATV 71H●●●M3X) have built-in radio interference filters to comply with the EMC standard for adjustable speed electrical power drive systems IEC/EN 61800-3, edition 2, category C2 or C3 in environment 1 or 2 and the European Electromagnetic Compatibility Directive.

Drives	Maximum length of shielded cable *(1)* according to			
	EN 55011 class A Gr1		EN 55011 class A Gr2	
	IEC/EN 61800-3 category C2		IEC/EN 61800-3 category C3	
	LF	HF	LF	HF
	m	m	m	m
ATV 71H037M3…HU22M3	10	5	–	–
ATV 71HU30M3…HU75M3	–	–	10	5
ATV 71H075N4…HU40N4 ATV 71W075N4…WU40N4 ATV 71P075N4Z…PU40N4Z	10	5	–	–
ATV 71HU55N4…HD15N4 ATV 71WU55N4…WD15N4 ATV 71PU55N4Z…PD11N4Z	–	–	10	5
ATV 71HD18N4…HC50N4 ATV 71WD18N4…WD75N4	–	–	50	25
ATV 71HU22Y…HD90Y	–	–	25	25
ATV 71HC11Y…HC63Y	–	–	50	25

Switching frequency

Drives	Switching frequency	
	LF (low frequency)	HF (high frequency)
	kHz	kHz
ATV 71H●●●M3 ATV 71H075N4…HD30N4 ATV 71W075N4…WD30N4 ATV 71P075N4Z…PD11N4Z	4	4.1…16
ATV 71HD37N4…HD75N4 ATV 71WD37N4…WD75N4	2…2.5	2.6…12
ATV 71HD90N4…HC50N4	2…4	4.1…8
ATV 71HU22Y…HD30Y	2.5…4	4.1…6
ATV 71HD37Y…HD63Y	2.5	2.6…4.9

Additional EMC input filters

Applications

When used with ATV 71H●●●M3, ATV 71H●●●M3X, ATV 71●●●●N4 and ATV 71P●●●N4Z drives, additional EMC input filters can be used to meet more stringent requirements and are designed to reduce conducted emissions on the line supply below the limits of standards EN 55011 group 1, class A or B and IEC/EN 61800/3 category C2 or C3.
For ATV 71H●●●M3, ATV 71HD11M3X…HD45M3X, ATV 71H075N4…HD75N4 and ATV 71P075N4Z…PD11N4Z drives, additional EMC filters can be mounted beside or under the drive. They act as a support for the drives and are attached to them via tapped holes.
For ATV 71HD55M3X, HD75M3X, ATV 71HD90N4…HC50N4 and ATV 71QD90N4…QC50N4 drives, additional EMC filters can only be mounted beside the drive.

Use according to the line supply type

Use of these additional filters is only possible on TN (connected to neutral) and TT (neutral to earth) type networks.
Standard IEC/EN 61800-3, appendix D2.1, states that on IT networks (isolated or impedance earthed neutral), filters can cause permanent insulation monitors to operate in a random manner.
In addition, the effectiveness of additional filters on this type of network depends on the type of impedance between neutral and earth, and therefore cannot be predicted.
In the case of a machine which needs to be installed on an IT network, the solution would be to insert an isolation transformer and place the machine locally on a TN or TT network.

(1) If motors are connected in parallel, it is the sum of all cable lengths that should be taken into account.

Drive/option combinations:
pages 40 to 51

Variable speed drives
Altivar 71: EMC filters
Option: additional input filters

Additional EMC input filters (for ATV 71H●●●M3, H●●●M3 and ATV 71●●●●N4 drives)

Drives	Maximum length of shielded cable (1)				In (2)	If (3)	Loss (4)	Reference	Weight
	EN 55011 class A Gr1 IEC/EN 61800-3 category C2		EN 55011 class B Gr1 IEC/EN 61800-3 category C1						
	LF	HF	LF	HF					
	m	m	m	m	A	mA	W		kg
Three-phase supply voltage: 200…240 V 50/60 Hz									
ATV 71H037M3…HU15M3	100	50	50	20	12	4	10	**VW3 A4 401**	2.200
ATV 71HU22M3…HU40M3	100	50	50	20	26	4.4	18	**VW3 A4 402**	4.000
ATV 71HU55M3	100	50	50	20	35	3	24	**VW3 A4 403**	5.800
ATV 71HU75M3	100	50	50	20	46	10	19	**VW3 A4 404**	7.000
ATV 71HD11M3X, HD15M3X	100	50	50	25	72	33	34	**VW3 A4 405**	12.000
ATV 71HD18M3X, HD22M3X	100	50	50	25	90	33	34	**VW3 A4 406**	15.000
ATV 71HD30M3X...HD45M3X	100	50	50	25	180	80	58	**VW3 A4 408**	40.000
ATV 71HD55M3X, HD75M3X	100	50	50	25	273	285	60	**VW3 A4 410**	25.000
Three-phase supply voltage: 380…480 V 50/60 Hz									
ATV 71H075N4…HU22N4 ATV 71W075N4…WU22N4 ATV 71P075N4Z…PU22N4Z	100	50	50	20	12	7	5	**VW3 A4 401**	2.200
ATV 71HU30N4, HU40N4 ATV 71WU30N4, WU40N4 ATV 71PU30N4Z, PU40N4Z	100	50	50	20	26	8	6	**VW3 A4 402**	4.000
ATV 71HU55N4, HU75N4 ATV 71WU55N4,WU75N4 ATV 71PU55N4Z, PU75N4Z	100	50	50	20	35	7	14	**VW3 A4 403**	5.800
ATV 71HD11N4 ATV 71WD11N4 ATV 71PD11N4Z	100	50	50	20	46	14	13	**VW3 A4 404**	7.000
ATV 71HD15N4 *(5)*, HD18N4 ATV 71WD15N4 *(5)*, WD18N4	300	200	100	100	72	60	14	**VW3 A4 405**	12.000
ATV 71HD22N4 ATV 71WD22N4	300	200	100	100	90	60	11	**VW3 A4 406**	15.000
ATV 71HD30N4, HD37N4 ATV 71WD30N4, WD37N4	300	200	100	100	92	60	30	**VW3 A4 407**	17.000
ATV 71HD45N4…HD75N4 ATV 71WD45N4…WD75N4	300	200	100	100	180	140	58	**VW3 A4 408**	40.000
ATV 71HD90N4…HC13N4 ATV 71QD90N4…QC13N4	300	150	50	25	273	500	60	**VW3 A4 410**	22.000
ATV 71HC16N4…HC28N4 ATV 71QC16N4…QC25N4	300	150	50	25	546	500	125	**VW3 A4 411**	25.000
ATV 71HC31...HC40N4 ATV 71QC31N4…QC40N4	300	150	50	25	728	500	210	**VW3 A4 412**	25.000
ATV 71HC50N4 ATV 71QC50N4	300	150	50	25	1456	200	380	**VW3 A4 413**	34.000

For drives	Switching frequency	
	LF (low frequency)	**HF** (high frequency)
	kHz	kHz
ATV 71H●●●M3 ATV 71H075N4…HD11N4 ATV 71W075N4…WD11N4 ATV 71P075N4Z…PD11N4Z	4	4.1…16
ATV 71HD11M3X, HD15M3X ATV 71HD15N4…HD30N4 ATV 71WD15N4…WD30N4	3.5...4	4.1…12
ATV 71HD18M3X...HD45M3X ATV 71HD37N4...HD75N4 ATV 71WD37N4…WD75N4	2…2.5	2.6…12
ATV 71HD55M3X, HD75M3X	2…4	4.1…8
ATV 71HD90N4...HC50N4 ATV 71QD90N4...QC50N4	2…4	4.1…8

(1) These limits are given as examples only as they vary depending on the stray capacitance of the motors and the cables used. If motors are connected in parallel, it is the sum of all cable lengths that should be taken into account.
(2) Nominal filter current.
(3) Maximum earth leakage current at 230 V and at 400 V 50 Hz on a TT system.
(4) Via heat dissipation.
*(5) It is possible to use a special filter **VW3 A4 409** with a leakage current If (3) of 14 mA which enables a maximum motor cable length of 100 m.*

Variable speed drives
Altivar 71: output filters

Altivar 71 drives have been designed to operate (without the need for additional optional equipment) with the following maximum motor cable lengths:

For drives	Maximum motor cable length *(1)*	
	Shielded	Unshielded
	m	m
ATV 71H●●●M3 ATV 71HD11M3X, HD55M3X ATV 71H075N4…HD75N4 ATV 71W075N4…WD75N4 ATV 71WD075N4C…WD75N4C ATV 71P075N4Z…PD75N4Z	50	100
ATV 71HD75M3X…HD90M3X ATV 71HD90N4…HC50N4 ATV 71QD90N4…QC50N4	80	100
ATV 71WD37N4…WD75N4C ATV 71WD37N4C…WD75N4C	50	100
ATV 71H●●●S6X	10	10
ATV 71HU22Y…HD30Y	10	10
ATV 71HD37Y…HD90Y	10	10
ATV 71HC11Y…HC63Y ATV 71QC11Y…QC63Y	15	30

(1) These values are given for a maximum switching frequency of 2.5 or 4 kHz depending on the rating.

Altivar 71 drives include as standard a software function used to limit overvoltages at the motor terminals. For more information, please refer to the Programming Manual (SUL function).

Depending on the cable lengths or the type of application, it may be necessary to use output filters:
- Motor chokes used to limit the dv/dt (see page 87)
- Sinus filters that are particularly effective for long cable runs or to reduce electromagnetic motor noise (see page 90)

Drive/option combinations:
pages 40 to 51

Variable speed drives
Altivar 71: output filters
Option: motor chokes

Motor choke

Motor chokes allow operation with motor cables which are longer than the standard lengths and/or limit the dv/dt at the motor terminals to:
- 500 V/µs for 200…400 V and 380…480 V three-phase line supplies
- 1000 V/µs for 500…690 V three-phase line supplies

They are also used to:
- Limit overvoltages at the motor terminals
- Filter interference caused by opening of a contactor placed between the filter and the motor
- Reduce the motor earth leakage current

Choke performance is ensured by not exceeding the cable lengths given on pages 88 and 89.
For an application with several motors connected in parallel, the cable length must include all cabling. If a cable longer than that recommended is used, the motor chokes may overheat.

Maximum motor cable lengths according to the application

Depending on the type of application, drives can either be used on their own or with the addition of various options.
The table below gives several examples of maximum permissible motor cable lengths according to application type:

Application type	Supply voltage		Maximum unshielded motor cable length	
			Without motor choke	With motor choke *(1)*
	V ∼	V ⎓	m	m
For ATV 71H075N4…HU40N4, ATV 71W075N4…WU40N4 and ATV 71P075N4…PU40N4 drives				
Drive only	400…480	560…680	100	200
With braking resistor (braking cycle = 5%)	400…480	785	100	200
With braking resistor (braking cycle ≥ 50%) For hoisting application	400…480	785	20	200
With Active Front End (AFE)	400	650	100	200
	480	770	20	200
For ATV 71H●●●M3, H●●●M3X, ATV 71HU55N4…HD75N4 and ATV 71WU55N4…WD75N4 drives				
Drive only	400…480	560…680	100	300
With braking resistor (braking cycle = 5%)	400…480	785	100	300
With braking resistor (braking cycle ≥ 50%) For hoisting application	400…480	785	20	300
With Active Front End (AFE)	400	650	100	300
	480	770	20	300
For ATV 71HD90N4…HC50N4 and ATV 71QD90N4…QC50N4 drives				
Drive only	400…480	560…680	100	300
With braking resistor (braking cycle = 5%)	400…480	785	100	300
With braking resistor (braking cycle ≥ 50%) For hoisting application	400…480	785	30	300
With Active Front End (AFE)	400	650	100	300
	480	770	30	300

(1) A sinus filter is required for use with longer cables (see page 90).

Drive/option combinations:
pages 40 to 51

Variable speed drives
Altivar 71: output filters
Option: motor chokes

PF121624



VW3 A5 101

Motor chokes

For drives	Maximum motor cable length *(1)*			Loss	Nominal current	Order in lots of	Unit reference	Weight
	Maximum switching frequency	Shielded	Unshielded					
	kHz	m	m	W	A			kg
Three-phase supply voltage: 200…240 V 50/60 Hz								
ATV 71H075M3…HU22M3	4	150	300	150	12	–	**VW3 A5 101**	5.500
ATV 71HU30M3…HU75M3	4	200	260	250	48	–	**VW3 A5 102**	8.000
		300	300	350	90	–	**VW3 A5 103**	10.000
ATV 71HD11M3X, HD15M3X	4	150	300	350	90	–	**VW3 A5 103**	10.000
ATV 71HD18M3X, HD22M3X	2.5	150	300	350	90	–	**VW3 A5 103**	10.000
ATV 71HD30M3X…HD45M3X	2.5	150	300	430	215	3	**VW3 A5 104**	15.500
ATV 71HD55M3X, HD75M3X	2.5	150	300	475	314	3	**VW3 A5 105**	32.000
Three-phase supply voltage: 380...480 V 50/60 Hz								
ATV 71H075N4…HU40N4 ATV 71W075N4…WU40N4 ATV 71P075N4Z…PU40N4Z	4	75	90	150	12	–	**VW3 A5 101**	5.500
		85	95	250	48	–	**VW3 A5 102**	8.000
		160	200	350	90	–	**VW3 A5 103**	10.000
ATV 71HU55N4…HD18N4 ATV 71WU55N4…WD18N4 ATV 71PU55N4Z…PD11N4Z	4	85	95	250	48	–	**VW3 A5 102**	8.000
		160	200	350	90	–	**VW3 A5 103**	10.000
		200	300	430	215	3	**VW3 A5 104**	15.500
ATV 71HD22N4, HD30N4 ATV 71WD22N4, WD30N4	4	140	170	350	90	–	**VW3 A5 103**	10.000
		150	300	430	215	3	**VW3 A5 104**	15.500
ATV 71HD37N4 ATV 71WD37N4	2.5	97	166	350	90	–	**VW3 A5 103**	10.000
		200	300	430	215	3	**VW3 A5 104**	15.500
ATV 71HD45N4…HD75N4 ATV 71WD45N4…WD75N4	2.5	150	300	430	215	3	**VW3 A5 104**	15.500
ATV 71HD90N4 ATV 71QD90N4	2.5	200	300	430	215	3	**VW3 A5 104**	15.500
ATV 71HC11N4, HC13N4 ATV 71QC11N4, QC13N4	2.5	150	250	475	314	3	**VW3 A5 105**	32.000
ATV 71HC16N4, HC20N4 ATV 71QC16N4, QC20N4	2.5	250	300	530	481	3	**VW3 A5 106**	58.000
ATV 71HC25N4 Motor P 220 kW ATV 71QC25N4	2.5	250	300	530	481	3	**VW3 A5 106**	58.000
Motor P 250 kW	2.5	200	250	598	759	3	**VW3 A5 107**	93.000
ATV 71HC28N4, HC31N4 ATV 71QC31N4		200	250	598	759	3	**VW3 A5 107**	93.000
ATV 71HC40N4 Motor P 355 kW ATV 71QC40N4	2.5	200	250	598	759	3	**VW3 A5 107**	93.000
Motor P 400 kW	2.5	250	300	682	1188	3	**VW3 A5 108**	120.000
ATV 71HC50N4 ATV 71QC50N4	2.5	250	300	682	1188	3	**VW3 A5 108**	120.000

(1) Cable length depends on the drive/motor choke combination. For an application with several motors connected in parallel, the cable length must include all cabling.
Recommended cable types:
- *Shielded cables: "GORSE" cable, type GUOSTV-LS/LH; "PROTOFLEX" cable, type EMV2YSL CY*
- *Unshielded cables: "GORSE" cable, type H07 RN-F4GXX; "BELDEN" cable, type 2950X*

Drive/option combinations:
pages 40 to 51

Variable speed drives
Altivar 71: output filters
Option: motor chokes

Motor chokes (continued)

For drives	Maximum motor cable length (1)			Loss	Nominal current	Order in lots of	Unit reference	Weight
	Maximum switching frequency	Shielded	Unshielded					
	kHz	m	m	W	A			kg
Three-phase supply voltage: 500…600 V 50/60 Hz *(2)*								
ATV 71HU15S6X… HU75S6X	2.5	50	100	250	48	–	**VW3 A5 102**	8.000
		75	150	350	90	–	**VW3 A5 103**	10.000
		150	250	430	215	3	**VW3 A5 104**	15.500
		250	400	860	215	3	**2 x VW3 A5 104**	31.000
Three-phase supply voltage: 500…690 V 50/60 Hz *(3)*								
ATV 71HU22Y…HU75Y	4	36	44	150	12	–	**VW3 A5 101**	5.500
		41	46	250	48	–	**VW3 A5 102**	8.000
		77	97	350	90	–	**VW3 A5 103**	10.000
ATV 71HD11Y…HD30Y	4	41	46	250	48	–	**VW3 A5 102**	8.000
		77	97	350	90	–	**VW3 A5 103**	10.000
		97	145	430	215	3	**VW3 A5 104**	15.500
ATV 71HD37Y…HD55Y	2.5	68	82	350	90	3	**VW3 A5 103**	10.000
		73	145	430	215	3	**VW3 A5 104**	15.500
ATV 71HD75Y… HD90Y	2.5	73	145	430	215	3	**VW3 A5 104**	15.500
ATV 71HC11Y, HC13Y ATV 71QC11Y, QC13Y	2.5	50	250	475	314	3	**VW3 A5 104**	15.500
ATV 71HC16Y, HC20Y ATV 71QC16Y, QC20Y	2.5	50	250	475	314	3	**VW3 A5 105**	32.000
ATV 71HC25Y, HC31Y ATV 71QC25Y, QC31Y	2.5	50	250	530	481	3	**VW3 A5 106**	58.000
ATV 71HC40Y, HC50Y ATV 71QC40Y, QC50Y	2.5	50	250	598	759	3	**VW3 A5 107**	93.000
ATV 71HC63Y ATV 71QC63Y	2.5	50	250	682	1188	3	**VW3 A5 108**	120.000

IP 20 protection kits

Description	For motor chokes	Reference	Weight kg
Mechanical kit including an IP 20 cover and cable clamps	VW3 A5 104, 105	**VW3 A9 612**	–
	VW3 A5 106…108	**VW3 A9 613**	–

(1) Cable length depends on the drive/motor choke combination. For an application with several motors connected in parallel, the cable length must include all cabling.
Recommended cable types:
- *Shielded cables: "GORSE" cable, type GUOSTV-LS/LH; "PROTOFLEX" cable, type EMV2YSL CY*
- *Unshielded cables: "GORSE" cable, type H07 RN-F4GXX; "BELDEN" cable, type 2950X*

(2) Maximum length given for a 600 V 60 Hz three-phase supply voltage.

(3) Maximum length given for a 690 V 50 Hz three-phase supply voltage.

Drive/option combinations:
pages 40 to 51

Variable speed drives
Altivar 71: output filters
Option: sinus filters

Presentation

Sinus filters allow Altivar 71 drives to operate with long motor cables (300 m to 1000 m) and ensure significant motor noise reduction.

For ATV 71H075M3…HD45M3X, ATV 71●075N4...●D75N4 and ATV 71P●●●N4Z drives, they also allow the use of unshielded cables while still complying with the standards relating to radiated EMC emissions (EN 55011 class A Gr1 and IEC/EN 61800-3 category C2).

For ATV 71HD55M3X, HD75M3X, ATV 71HD90N4…HC50N4 and ATV 71QD90N4...QC50N4 drives, the sinus filter only operates with a voltage/frequency drive ratio.

Note: *Please refer to the Programming Manual when setting up the sinus filter.*

Applications

■ For ATV 71H075M3…HD45M3X, ATV 71●H075N4... ●D75N4 and ATV 71P●●●N4Z drives, applications requiring:
- □ Long cable runs
- □ Mechanical restrictions preventing the use of shielded cables
- □ An intermediate transformer between the drive and the motor
- □ A reduction in motor noise
- □ Motors connected in parallel

■ For ATV 71HD55M3X, HD75M3X, ATV 71HD90N4...HC50N4 and ATV 71QD90N4...QC50N4 drives, applications requiring:
- □ An intermediate transformer between the drive and the motor
- □ A reduction in electromagnetic motor noise

Drive/option combinations:
pages 40 to 51

Variable speed drives
Altivar 71: output filters
Option: sinus filters

References

For drives		Nominal current	Loss at 100 Hz	Reference	Weight
		A	W		kg
Three-phase supply voltage: 200…240 V 50/60 Hz					
ATV 71H075M3, HU15M3 *(1)*		11	50	**VW3 A5 201**	8.000
ATV 71HU22M3, HU30M3		16	70	**VW3 A5 202**	11.000
ATV 71HU40M3... HU75M3		33	120	**VW3 A5 203**	22.000
ATV 71HD11M3X, HD15M3X		66	180	**VW3 A5 204**	45.000
ATV 71HD18M3X, HD22M3X		95	250	**VW3 A5 205**	60.000
ATV 71HD30M3X... HD45M3X		180	400	**VW3 A5 206**	120.000
ATV 71HD55M3X, HD75M3X		300	1360	**VW3 A5 208**	165.000
Three-phase supply voltage: 380…480 V 50/60 Hz					
ATV 71H075N4...HU40N4 *(1)* ATV 71W075N4…WU40N4 ATV 71P075N4Z…PU40N4Z		11	50	**VW3 A5 201**	8.000
ATV 71HU55N4 ATV 71WU55N4 ATV 71PU55N4Z		16	70	**VW3 A5 202**	11.000
ATV 71HU75N4...HD15N4 ATV 71WU75N4…WD15N4 ATV 71PU75N4Z, PD11N4Z		33	120	**VW3 A5 203**	22.000
ATV 71HD18N4... HD30N4 ATV 71WD18N4…WD30N4		66	180	**VW3 A5 204**	45.000
ATV 71HD37N4, HD45N4 ATV 71WD37N4, WD45N4		95	250	**VW3 A5 205**	60.000
ATV 71HD55N4, HD75N4 ATV 71WD55N4, WD75N4		180	400	**VW3 A5 206**	120.000
ATV 71HD90N4, HC11N4 ATV 71QD90N4, QC11N4		200	945	**VW3 A5 207**	130.000
ATV 71HC13N4, HC16N4 ATV 71QC13N4, QC16N4		300	1360	**VW3 A5 208**	165.000
ATV 71HC20N4 ATV 71QC20N4		400	1900	**VW3 A5 209**	190.000
ATV 71HC25N4 ATV 71QC25N4	Motor P 220 kW	400	1900	**VW3 A5 209**	190.000
	Motor P 250 kW	600	2370	**VW3 A5 210**	260.000
ATV 71HC28N4, HC31N4 ATV 71QC31N4		600	2370	**VW3 A5 210**	260.000
ATV 71HC40N4 ATV 71QC40N4	Motor P 355 kW	600	2370	**VW3 A5 210**	260.000
	Motor P 400 kW	1200	5150	**VW3 A5 211**	600.000
ATV 71HC50N4 ATV 71QC50N4		1200	5150	**VW3 A5 211**	600.000

(1) For ATV 71H075M3, ATV 71HU15M3 and ATV 71HU15N4 drives, a lower category of motor is recommended for use with a sinus filter.

Drive/option combinations:
pages 40 to 51

Variable speed drives
Altivar 71
Motor starters: 200…240 V supply voltage

DF526131



DF526153



PF101002



GV2 L20
+
LC1 D25●●
+
ATV 71HU22M3

Applications

Circuit-breaker/contactor/drive combinations can be used to ensure continuous service of the installation with optimum safety.
The type of circuit-breaker/contactor coordination selected can reduce maintenance costs in the event of a motor short-circuit by minimizing the time required to make the necessary repairs and the cost of replacement equipment. The suggested combinations provide type 1 or type 2 coordination depending on the drive rating.

Type 2 coordination: A motor short-circuit will not damage the device or affect its settings. The motor starter must be able to operate once the electrical fault has been removed. The electrical isolation provided by the circuit-breaker will not be affected by the short-circuit. Welding of the contactor contacts is permissible if they can be separated easily.

Type 1 coordination: The electrical isolation provided by the circuit-breaker will not be affected by the incident and no other elements apart from the contactor are damaged as a result of the motor short-circuit.

The drive controls the motor, provides protection against short-circuits between the drive and the motor and protects the motor cable against overloads. The overload protection is provided by the drive's motor thermal protection. If this protection is removed, external thermal protection must be provided.
Before restarting the installation, the cause of the trip must be removed.

Motor starters for IP 20 drives

Motor		Drive	Circuit-breaker		Line contactor
Power *(1)*		Reference	Reference *(2)*	Rating	Reference *(3) (4)*
kW	*HP*			A	
Supply voltage 200…240 V 50/60 Hz single phase - Type 2 coordination					
0.37	*0.5*	**ATV 71H075M3**	**GV2 L10**	6.3	**LC1 D18●●**
0.75	*1*	**ATV 71HU15M3**	**GV2 L14**	10	**LC1 D18●●**
1.5	*2*	**ATV 71HU22M3**	**GV2 L20**	18	**LC1 D25●●**
2.2	*3*	**ATV 71HU30M3**	**GV2 L22**	25	**LC1 D25●●**
3	–	**ATV 71HU40M3** *(5)*	**GV2 L22**	25	**LC1 D25●●**
4	*5*	**ATV 71HU55M3** *(5)*	**GV3 L40**	40	**LC1 D40●●**
5.5	*7.5*	**ATV 71HU75M3** *(5)*	**GV3 L50**	50	**LC1 D50●●**
Supply voltage 200…240 V 50/60 Hz single phase - Type 1 coordination					
0.37	*0.5*	**ATV 71H075M3**	**GV2 L14**	10	**LC1 D09●●**
0.75	*1*	**ATV 71HU15M3**	**GV2 L16**	14	**LC1 D09●●**
1.5	*2*	**ATV 71HU22M3**	**GV2 L20**	18	**LC1 D09●●**
2.2	*3*	**ATV 71HU30M3**	**GV2 L32**	25	**LC1 D18●●**
3	–	**ATV 71HU40M3** *(5)*	**GV2 L32**	25	**LC1 D18●●**
4	*5*	**ATV 71HU55M3** *(5)*	**GV3 L40**	40	**LC1 D32●●**
5.5	*7.5*	**ATV 71HU75M3** *(5)*	**GV3 L50**	50	**LC1 D38●●**

(1) Standard power ratings for 230 V 50/60 Hz 4-pole motors.
The values expressed in HP conform to the NEC (National Electrical Code).
(2) Breaking capacity of circuit-breakers according to standard IEC 60947-2:

Circuit-breaker	Icu (kA) for 240 V
GV2 L	50
GV3 L	100

(3) Composition of contactors:
LC1 D●●: 3 poles + 1 N/O auxiliary contact and 1 N/C auxiliary contact.
(4) Replace ●● with the control circuit voltage reference given in the table below:

	Volts ∼	24	48	110	220	230	240
LC1 D	50 Hz	**B5**	**E5**	**F5**	**M5**	**P5**	**U5**
	60 Hz	**B6**	**E6**	**F6**	**M6**	**–**	**U6**
	50/60 Hz	**B7**	**E7**	**F7**	**M7**	**P7**	**U7**

For other voltages available between 24 V and 660 V, or a DC control circuit, please contact our Customer Care Centre.
(5) A line choke must be added, see page 78.

Variable speed drives
Altivar 71
Motor starters: 200…240 V supply voltage

DF526131



DF526153



PF101003



GV2 L22
+
LC1 D25●●
+
ATV 71HU30M3

Motor starters for IP 20 drives

Motor Power *(1)*		Drive Reference	Circuit-breaker Reference *(2)*	Rating	Irm	Line contactor Reference *(3) (4)*
kW	*HP*			A	A	
Three-phase supply voltage 200…240 V 50/60 Hz - Type 2 coordination						
0.37	*0.5*	**ATV 71H037M3**	**GV2 L08**	4	–	**LC1 D09●●**
0.75	*1*	**ATV 71H075M3**	**GV2 L10**	10	–	**LC1 D09●●**
1.5	*2*	**ATV 71HU15M3**	**GV2 L16**	10	–	**LC1 D18●●**
2.2	*3*	**ATV 71HU22M3**	**GV2 L20**	14	–	**LC1 D18●●**
3	–	**ATV 71HU30M3**	**GV2 L22**	18	–	**LC1 D25●●**
4	*5*	**ATV 71HU40M3**	**GV2 L32**	25	–	**LC1 D25●●**
5.5	*7.5*	**ATV 71HU55M3**	**GV3 L40**	40	–	**LC1 D40A●●**
7.5	*10*	**ATV 71HU75M3**	**GV3 L50**	50	–	**LC1 D50A●●**
11	*15*	**ATV 71HD11M3X**	**GV3 L65**	65	–	**LC1 D65A●●**
15	*20*	**ATV 71HD15M3X**	**NS80HMA80**	80	480	**LC1 D80●●**
18.5	*25*	**ATV 71HD18M3X**	**NS80HMA80**	100	600	**LC1 D80●●**
22	*30*	**ATV 71HD22M3X**	**NSX100●MA100**	100	600	**LC1 D95●●**
30	*40*	**ATV 71HD30M3X**	**NSX160●MA150**	150	1350	**LC1 D150●●**
37	*50*	**ATV 71HD37M3X**	**NSX160●MA150**	150	1350	**LC1 D150●●**
45	*60*	**ATV 71HD45M3X**	**NSX250●MA220**	220	1980	**LC1 D185●●**
55	*75*	**ATV 71HD55M3X**	**NSX250●MA220**	220	1980	**LC1 F225●●**
75	*100*	**ATV 71HD75M3X**	**NSX400● Micrologic 1.3M**	320	1920	**LC1 F265●●**
Three-phase supply voltage 200…240 V 50/60 Hz - Type 1 coordination						
0.37	*0.5*	**ATV 71H037M3**	**GV2 L08**	4	–	**LC1 D09●●**
0.75	*1*	**ATV 71H075M3**	**GV2 L10**	10	–	**LC1 D09●●**
1.5	*2*	**ATV 71HU15M3**	**GV2 L16**	10	–	**LC1 D09●●**
2.2	*3*	**ATV 71HU22M3**	**GV2 L20**	14	–	**LC1 D09●●**
3	–	**ATV 71HU30M3**	**GV2 L22**	18	–	**LC1 D18●●**
4	*5*	**ATV 71HU40M3**	**GV2 L32**	25	–	**LC1 D18●●**
5.5	*7.5*	**ATV 71HU55M3**	**GV3 L40**	40	–	**LC1 D25●●**
7.5	*10*	**ATV 71HU75M3**	**GV3 L50**	50	–	**LC1 D32●●**
11	*15*	**ATV 71HD11M3X**	**GV3 L65**	65	–	**LC1 D40A●●**
15	*20*	**ATV 71HD15M3X**	**NS80HMA80**	80	480	**LC1 D50A●●**
18.5	*25*	**ATV 71HD18M3X**	**NS80HMA80**	100	600	**LC1 D50A●●**
22	*30*	**ATV 71HD22M3X**	**NSX100●MA100**	100	600	**LC1 D80●●**
30	*40*	**ATV 71HD30M3X**	**NSX160●MA150**	150	1350	**LC1 D95●●**
37	*50*	**ATV 71HD37M3X**	**NSX160●MA150**	150	1350	**LC1 D115●●**
45	*60*	**ATV 71HD45M3X**	**NSX250●MA220**	220	1980	**LC1 D115●●**
55	*75*	**ATV 71HD55M3X**	**NSX250●MA220**	220	1980	**LC1 D115●●**
75	*100*	**ATV 71HD75M3X**	**NSX400● Micrologic 1.3M**	320	1920	**LC1 F185●●**

(1) Standard power ratings for 230 V 50/60 Hz 4-pole motors.
The values expressed in HP conform to the NEC (National Electrical Code).
(2) NS80HMA, NSX●●●: Products sold under the Merlin Gerin brand. For references to be completed, replace the dot with the letter corresponding to the circuit-breaker breaking performance (B, F, N, H, S, L).
Breaking capacity of circuit-breakers according to standard IEC 60947-2:

Circuit-breaker	Icu (kA) for 240 V						
		B	F	N	H	S	L
GV2 L08, GV2 L10	130	–	–	–	–	–	–
GV2 L16…L32, GV3 L40…L65	50	–	–	–	–	–	–
NS80HMA	100	–	–	–	–	–	–
NSX100●MA…250●MA	–	40	85	90	100	120	150
NSX400●	–	–	40	85	100	120	150

(3) Composition of contactors:
LC1 D●●: 3 poles + 1 N/O auxiliary contact and 1 N/C auxiliary contact.
LC1 F●●●: 3 poles. To add auxiliary contacts or other accessories, please refer to the "Motor-starter solutions - Control and protection components" catalogue.
(4) Replace ●● with the control circuit voltage reference given in the table below:

	Volts ∼	24	48	110	220	230	240
LC1 D	50 Hz	**B5**	**E5**	**F5**	**M5**	**P5**	**U5**
	60 Hz	**B6**	**E6**	**F6**	**M6**	**–**	**U6**
	50/60 Hz	**B7**	**E7**	**F7**	**M7**	**P7**	**U7**
LC1 185	50 Hz (LX1 coil)	**B5**	**E5**	**F5**	**M5**	**P5**	**U5**
	60 Hz (LX1 coil)	**–**	**E6**	**F6**	**M6**	**–**	**U6**
	40…400 Hz (LX9 coil)	**–**	**E7**	**F7**	**M7**	**P7**	**U7**
LC1 F225	50 Hz (LX1 coil)	**B5**	**E5**	**F5**	**M5**	**P5**	**U5**
	60 Hz (LX1 coil)	**–**	**E6**	**F6**	**M6**	**–**	**U6**
	40…400 Hz (LX9 coil)	**–**	**E7**	**F7**	**M7**	**P7**	**U7**
LC1 F265	40…400 Hz (LX1 coil)	**B7**	**E7**	**F7**	**M7**	**P7**	**U7**

For other voltages available between 24 V and 660 V, or a DC control circuit, please contact our Customer Care Centre.

Variable speed drives
Altivar 71
Motor starters: 380…415 V supply voltage

PF095516



DF626158



PF107476SE



NSX160●MA150
+
LC1 D115●●
+
ATV 71HD45N4

Motor starters for IP 20 drives

Motor Power *(1)*		Drive Reference	Circuit-breaker Reference *(2)*	Rating	Irm	Line contactor Reference *(3) (4)*
kW	***HP***			**A**	**A**	
Three-phase supply voltage 380…415 V 50/60 Hz - Type 2 coordination						
0.75	*1*	**ATV 71H075N4**	**GV2 L08**	4	–	**LC1 D09●●**
1.5	*2*	**ATV 71HU15N4**	**GV2 L10**	6.3	–	**LC1 D09●●**
2.2	*3*	**ATV 71HU22N4**	**GV2 L14**	10	–	**LC1 D25●●**
3	–	**ATV 71HU30N4**	**GV2 L16**	14	–	**LC1 D25●●**
4	*5*	**ATV 71HU40N4**	**GV2 L16**	14	–	**LC1 D25●●**
5.5	*7.5*	**ATV 71HU55N4**	**GV2 L22**	25	–	**LC1 D25●●**
7.5	*10*	**ATV 71HU75N4**	**GV3 L32**	32	–	**LC1 D40A●●**
11	*15*	**ATV 71HD11N4**	**GV3 L40**	40	–	**LC1 D50A●●**
15	*20*	**ATV 71HD15N4**	**GV3 L50**	50	–	**LC1 D65A●●**
18.5	*25*	**ATV 71HD18N4**	**GV3 L50**	50	–	**LC1 D65A●●**
22	*30*	**ATV 71HD22N4**	**GV3 L65**	65	–	**LC1 D65A●●**
30	*40*	**ATV 71HD30N4**	**NS80HMA80**	80	480	**LC1 D80●●**
37	*50*	**ATV 71HD37N4**	**NSX100●MA100**	100	800	**LC1 D95●●**
45	*60*	**ATV 71HD45N4**	**NSX160●MA150**	150	1350	**LC1 D115●●**
55	*75*	**ATV 71HD55N4**	**NSX160●MA150**	150	1350	**LC1 D150●●**
75	*100*	**ATV 71HD75N4**	**NSX250●MA220**	220	1980	**LC1 F185●●**
90	*125*	**ATV 71HD90N4**	**NSX250●MA220**	220	1980	**LC1 F185●●**
110	*150*	**ATV 71HC11N4**	**NSX250●MA220**	220	1980	**LC1 F225●●**
132	*200*	**ATV 71HC13N4**	**NSX400● Micrologic 1.3M**	320	1920	**LC1 F265●●**
160	*250*	**ATV 71HC16N4**	**NSX400● Micrologic 1.3M**	320	1920	**LC1 F330●●**
200	*300*	**ATV 71HC20N4**	**NSX630● Micrologic 1.3M**	320	1920	**LC1 F400●●**
220	*350*	**ATV 71HC25N4**	**NSX630● Micrologic 1.3M**	500	3000	**LC1 F400●●**
250	*400*	**ATV 71HC25N4**	**NSX630● Micrologic 1.3M**	500	3000	**LC1 F500●●**
280	*450*	**ATV 71HC28N4**	**NSX630● Micrologic 1.3M**	500	3000	**LC1 F500●●**
315	*500*	**ATV 71HC31N4**	**NS800L Micrologic 2 or 5**	500	3000	**LC1 F630●●**
355	–	**ATV 71HC40N4**	**NS800L Micrologic 2 or 5**	800	1600	**LC1 F630●●**
400	*600*	**ATV 71HC40N4**	**NS800L Micrologic 2 or 5**	800	1600	**LC1 F800●●**
500	*700*	**ATV 71HC50N4**	**NS1000L Micrologic 2 or 5**	1000	2000	**LC1 BL●●**

(1) Standard power ratings for 4-pole motors 50/60 Hz 400 V.
The values expressed in HP comply with the NEC (National Electrical Code).
(2) NS80HMA, NSX●●●, NS800L, NS1000L: Products sold under the Merlin Gerin brand.
For references to be completed, replace the dot with the letter corresponding to the circuit-breaker breaking performance (B, F, N, H, S, L).
Breaking capacity of circuit-breakers according to standard IEC 60947-2:

Circuit-breaker	Icu (kA) for 400 V						
		B	**F**	**N**	**H**	**S**	**L**
GV2 L08…L14	130	–	–	–	–	–	–
GV2 L16, GV2 L22, GV3 L32…L65	50	–	–	–	–	–	–
NS80HMA	70	–	–	–	–	–	–
NSX100●MA…250●MA	–	25	36	50	70	100	150
NSX400●, NSX630●	–	–	36	50	70	100	150
NS800L, NS1000L	–	–	–	–	–	–	150

(3) Composition of contactors:
LC1 D●●: 3 poles + 1 N/O auxiliary contact and 1 N/C auxiliary contact.
LC1 F●●●, LC1 B: 3 poles. To add auxiliary contacts or other accessories, please refer to the "Motor-starter solutions - Control and protection components" catalogue.
(4) Replace ●● with the control circuit voltage reference given in the table below:

	Volts ∿	24	48	110	220	230	240
LC1 D	50 Hz	**B5**	**E5**	**F5**	**M5**	**P5**	**U5**
	60 Hz	**B6**	**E6**	**F6**	**M6**	**–**	**U6**
	50/60 Hz	**B7**	**E7**	**F7**	**M7**	**P7**	**U7**
LC1 F185	50 Hz (LX1 coil)	**B5**	**E5**	**F5**	**M5**	**P5**	**U5**
	60 Hz (LX1 coil)	**–**	**E6**	**F6**	**M6**	**–**	**U6**
	40…400 Hz (LX9 coil)	**–**	**E7**	**F7**	**M7**	**P7**	**U7**
LC1 F225	40…400 Hz (LX1 coil)	**B7**	**E7**	**F7**	**M7**	**P7**	**U7**
LC1 F265, F330	40…400 Hz (LX1 coil)	**B7**	**E7**	**F7**	**M7**	**P7**	**U7**
LC1 F400…F630	40…400 Hz (LX1 coil)	**–**	**E7**	**F7**	**M7**	**P7**	**U7**
LC1 F800	40…400 Hz (LX1 coil)	**–**	**–**	**FE7**	**P7**	**P7**	**P7**
LC1 BL	50…400 Hz (WB1 coil)	**–**	**–**	**F**	**M**	**P**	**U**

For other voltages available between 24 V and 660 V, or a DC control circuit, please contact our Customer Care Centre.

Variable speed drives
Altivar 71
Motor starters: 380…415 V supply voltage

PF095516



DF526158



PF107476SE



NSX160●MA150
+
LC1 D115●●
+
ATV 71HD45N4

Motor starters for IP 20 drives

Motor Power *(1)*		Drive Reference	Circuit-breaker Reference *(2)*	Rating	Irm	Line contactor Reference *(3) (4)*
kW	*HP*			A	A	
Three-phase supply voltage 380…415 V 50/60 Hz - Type 1 coordination						
0.75	*1*	**ATV 71H075N4**	**GV2 L08**	4	–	**LC1 D09●●**
1.5	*2*	**ATV 71HU15N4**	**GV2 L10**	6.3	–	**LC1 D09●●**
2.2	*3*	**ATV 71HU22N4**	**GV2 L14**	10	–	**LC1 D09●●**
3	–	**ATV 71HU30N4**	**GV2 L16**	14	–	**LC1 D09●●**
4	*5*	**ATV 71HU40N4**	**GV2 L16**	14	–	**LC1 D18●●**
5.5	*7.5*	**ATV 71HU55N4**	**GV2 L22**	25	–	**LC1 D25●●**
7.5	*10*	**ATV 71HU75N4**	**GV3 L32**	32	–	**LC1 D40A●●**
11	*15*	**ATV 71HD11N4**	**GV3 L40**	40	–	**LC1 D40A●●**
15	*20*	**ATV 71HD15N4**	**GV3 L50**	50	–	**LC1 D50A●●**
18.5	*25*	**ATV 71HD18N4**	**GV3 L50**	50	–	**LC1 D50A●●**
22	*30*	**ATV 71HD22N4**	**GV3 L65**	65	–	**LC1 D65A●●**
30	*40*	**ATV 71HD30N4**	**NS80HMA80**	80	480	**LC1 D65A●●**
37	*50*	**ATV 71HD37N4**	**NSX100●MA100**	100	800	**LC1 D95●●**
45	*60*	**ATV 71HD45N4**	**NSX160●MA150**	150	1350	**LC1 D115●●**
55	*75*	**ATV 71HD55N4**	**NSX160●MA150**	150	1350	**LC1 D115●●**
75	*100*	**ATV 71HD75N4**	**NSX250●MA220**	220	1980	**LC1 F185●●**
90	*125*	**ATV 71HD90N4**	**NSX250●MA220**	220	1980	**LC1 F185●●**
110	*150*	**ATV 71HC11N4**	**NSX250●MA220**	220	1980	**LC1 F225●●**
132	*200*	**ATV 71HC13N4**	**NSX400● Micrologic 1.3M**	320	1920	**LC1 F265●●**
160	*250*	**ATV 71HC16N4**	**NSX400● Micrologic 1.3M**	320	1920	**LC1 F330●●**
200	*300*	**ATV 71HC20N4**	**NSX630● Micrologic 1.3M**	320	1920	**LC1 F400●●**
220	*350*	**ATV 71HC25N4**	**NSX630● Micrologic 1.3M**	500	3000	**LC1 F400●●**
250	*400*	**ATV 71HC25N4**	**NSX630● Micrologic 1.3M**	500	3000	**LC1 F500●●**
280	*450*	**ATV 71HC28N4**	**NSX630● Micrologic 1.3M**	500	3000	**LC1 F500●●**
315	*500*	**ATV 71HC31N4**	**NS800L Micrologic 2 or 5 (LR OFF)**	500	3000	**LC1 F630●●**
355	–	**ATV 71HC40N4**	**NS800L Micrologic 2 or 5 (LR OFF)**	800	1600	**LC1 F630●●**
400	*600*	**ATV 71HC40N4**	**NS800L Micrologic 2 or 5 (LR OFF)**	800	1600	**LC1 F630●●**
500	*700*	**ATV 71HC50N4**	**NS1000L Micrologic 2 or 5 (LR OFF)**	1000	2000	**LC1 F630●●**

(1) Standard power ratings for 4-pole motors 50/60 Hz 400 V.
The values expressed in HP comply with the NEC (National Electrical Code).
(2) NS80HMA, NSX●●●, NS800L, NS1000L: Products sold under the Merlin Gerin brand.
For references to be completed, replace the dot with the letter corresponding to the circuit-breaker breaking performance (B, F, N, H, S, L).
Breaking capacity of circuit-breakers according to standard IEC 60947-2:

Circuit-breaker	Icu (kA) for 400 V						
		B	F	N	H	S	L
GV2 L08…L14	130	–	–	–	–	–	–
GV2 L16, GV2 L22, GV3 L32…L65	50	–	–	–	–	–	–
NS80HMA	70	–	–	–	–	–	–
NSX100●MA…250●MA	–	25	36	50	70	100	150
NSX400●, NSX630●	–	–	36	50	70	100	150
NS800L, NS1000L	–	–	–	–	–	–	150

(3) Composition of contactors:
LC1 D●●: 3 poles + 1 N/O auxiliary contact and 1 N/C auxiliary contact.
LC1 F●●●: 3 poles. To add auxiliary contacts or other accessories, please refer to the "Motor-starter solutions - Control and protection components" catalogue.
(4) Replace ●● with the control circuit voltage reference given in the table below:

	Volts ∼	24	48	110	220	230	240
LC1 D	50 Hz	**B5**	**E5**	**F5**	**M5**	**P5**	**U5**
	60 Hz	**B6**	**E6**	**F6**	**M6**	**–**	**U6**
	50/60 Hz	**B7**	**E7**	**F7**	**M7**	**P7**	**U7**
LC1 F185	50 Hz (LX1 coil)	**B5**	**E5**	**F5**	**M5**	**P5**	**U5**
	60 Hz (LX1 coil)	**–**	**E6**	**F6**	**M6**	**–**	**U6**
	40…400 Hz (LX9 coil)	**–**	**E7**	**F7**	**M7**	**P7**	**U7**
LC1 F225	40…400 Hz (LX1 coil)	**B7**	**E7**	**F7**	**M7**	**P7**	**U7**
LC1 F265, F330	40…400 Hz (LX1 coil)	**B7**	**E7**	**F7**	**M7**	**P7**	**U7**
LC1 F400…F630	40…400 Hz (LX1 coil)	**–**	**E7**	**F7**	**M7**	**P7**	**U7**
LC1 F800	40…400 Hz (LX1 coil)	**–**	**–**	**FE7**	**P7**	**P7**	**P7**
LC1 BL	50…400 Hz (WB1 coil)	**–**	**–**	**F**	**M**	**P**	**U**

For other voltages available between 24 V and 660 V, or a DC control circuit, please contact our Customer Care Centre.

Variable speed drives
Altivar 71
Motor starters: 440…480 V supply voltage

PF086516



DF526158



PF107476SE



NSX160●MA150
+
LC1 D115●●
+
ATV 71HD55N4

Motor starters for IP 20 drives

Motor Power *(1)*		Drive Reference	Circuit-breaker Reference *(2)*	Rating	Irm	Line contactor Reference *(3) (4)*
kW	*HP*			A	A	
Three-phase supply voltage 440…480 V 50/60 Hz - Type 2 coordination						
0.75	*1*	**ATV 71H075N4**	**GV2 L08**	4	–	**LC1 D25●●**
1.5	*2*	**ATV 71HU15N4**	**GV2 L10**	6.3	–	**LC1 D25●●**
2.2	*3*	**ATV 71HU22N4**	**GV2 L14**	10	–	**LC1 D25●●**
3	–	**ATV 71HU30N4**	**GV2 L14**	10	–	**LC1 D25●●**
4	*5*	**ATV 71HU40N4**	**GV2 L16**	14	–	**LC1 D25●●**
5.5	*7.5*	**ATV 71HU55N4**	**GV2 L20**	25	–	**LC1 D25●●**
7.5	*10*	**ATV 71HU75N4**	**GV3 L25**	32	–	**LC1 D32●●**
11	*15*	**ATV 71HD11N4**	**GV3 L32**	40	–	**LC1 D40A●●**
15	*20*	**ATV 71HD15N4**	**GV3 L50**	50	–	**LC1 D50A●●**
18.5	*25*	**ATV 71HD18N4**	**GV3 L50**	50	–	**LC1 D50A●●**
22	*30*	**ATV 71HD22N4**	**GV3 L50**	50	–	**LC1 D65A●●**
30	*40*	**ATV 71HD30N4**	**GV3 L65**	65	–	**LC1 D65A●●**
37	*50*	**ATV 71HD37N4**	**NS80HMA80**	100	600	**LC1 D80●●**
45	*60*	**ATV 71HD45N4**	**NSX100●MA100**	100	600	**LC1 D115●●**
55	*75*	**ATV 71HD55N4**	**NSX160●MA150**	150	1350	**LC1 D115●●**
75	*100*	**ATV 71HD75N4**	**NSX250●MA220**	150	1350	**LC1 D185●●**
90	*125*	**ATV 71HD90N4**	**NSX250●MA220**	150	1350	**LC1 D185●●**
110	*150*	**ATV 71HC11N4**	**NSX250●MA220**	220	1980	**LC1 F185●●**
132	*200*	**ATV 71HC13N4**	**NSX250●MA220**	220	1980	**LC1 F265●●**
160	*250*	**ATV 71HC16N4**	**NSX400● Micrologic 1.3M**	320	1920	**LC1 F265●●**
200	*300*	**ATV 71HC20N4**	**NSX630● Micrologic 1.3M**	320	1920	**LC1 F400●●**
220	*350*	**ATV 71HC25N4**	**NSX630● Micrologic 1.3M**	320	1920	**LC1 F400●●**
250	*400*	**ATV 71HC25N4**	**NSX630● Micrologic 1.3M**	500	3000	**LC1 F500●●**
280	*450*	**ATV 71HC28N4**	**NSX630● Micrologic 1.3M**	500	3000	**LC1 F500●●**
315	*500*	**ATV 71HC31N4**	**NS800L Micrologic 2 or 5**	500	3000	**LC1 F630●●**
355	–	**ATV 71HC40N4**	**NS800L Micrologic 2 or 5**	500	3000	**LC1 F630●●**
400	*600*	**ATV 71HC40N4**	**NS800L Micrologic 2 or 5**	800	1600	**LC1 F780●●**
500	*700*	**ATV 71HC50N4**	**NS1000L Micrologic 2 or 5**	1000	2000	**LC1 F780●●**

(1) Standard power ratings for 400 V 50/60 Hz 4-pole motors.
The values expressed in HP conform to the NEC (National Electrical Code).
(2) NS80HMA, NSX●●●, NS800L, NS1000L: Products sold under the Merlin Gerin brand.
For references to be completed, replace the dot with the letter corresponding to the circuit-breaker breaking performance (B, F, N, H, S, L).
Breaking capacity of circuit-breakers according to standard IEC 60947-2:

Circuit-breaker	Icu (kA) for 440 V						
		B	F	N	H	S	L
GV2 L08, GV2 L10	130	–	–	–	–	–	–
GV2 L14…L20	20	–	–	–	–	–	–
GV3 L25…L65	50	–	–	–	–	–	–
NS80HMA	65	–	–	–	–	–	–
NSX100●MA… 250●MA	–	20	35	50	65	90	130
NSX400●, NSX630●	–	–	30	42	65	90	130
NS800L, NS1000L	–	–	–	–	–	–	130

(3) Composition of contactors:
LC1 D●●: 3 poles + 1 N/O auxiliary contact and 1 N/C auxiliary contact.
LC1 F●●●: 3 poles. To add auxiliary contacts or other accessories, please refer to the "Motor-starter solutions - Control and protection components" catalogue.
(4) Replace ●● with the control circuit voltage reference given in the table below:

	Volts ∼	24	48	110	220	230	240
LC1 D	50 Hz	**B5**	**E5**	**F5**	**M5**	**P5**	**U5**
	60 Hz	**B6**	**E6**	**F6**	**M6**	**–**	**U6**
	50/60 Hz	**B7**	**E7**	**F7**	**M7**	**P7**	**U7**
LC1 F185	50 Hz (LX1 coil)	**B5**	**E5**	**F5**	**M5**	**P5**	**U5**
	60 Hz (LX1 coil)	**–**	**E6**	**F6**	**M6**	**–**	**U6**
	40…400 Hz (LX9 coil)	**–**	**E7**	**F7**	**M7**	**P7**	**U7**
LC1 F265	40…400 Hz (LX1 coil)	**B7**	**E7**	**F7**	**M7**	**P7**	**U7**
LC1 F400…F630	40…400 Hz (LX1 coil)	**–**	**E7**	**F7**	**M7**	**P7**	**U7**
LC1 F780	40…400 Hz (LX1 coil)	**–**	**–**	**FE7**	**P7**	**P7**	**P7**

For other voltages available between 24 V and 660 V, or a DC control circuit, please contact our Customer Care Centre.

Variable speed drives
Altivar 71
Motor starters: 440…480 V supply voltage

PF095516



DF526158



PF107476SE



NSX160●MA150
+
LC1 D115●●
+
ATV 71HD55N4

Motor starters for IP 20 drives

Motor Power *(1)*		Drive Reference	Circuit-breaker Reference *(2)*	Rating	Irm	Line contactor Reference *(3) (4)*
kW	*HP*			A	A	
Three-phase supply voltage 440…480 V 50/60 Hz - Type 1 coordination						
0.75	*1*	**ATV 71H075N4**	**GV2 L08**	4	–	**LC1 D09●●**
1.5	*2*	**ATV 71HU15N4**	**GV2 L10**	6.3	–	**LC1 D09●●**
2.2	*3*	**ATV 71HU22N4**	**GV2 L14**	10	–	**LC1 D09●●**
3	–	**ATV 71HU30N4**	**GV2 L14**	10	–	**LC1 D09●●**
4	*5*	**ATV 71HU40N4**	**GV2 L16**	14	–	**LC1 D09●●**
5.5	*7.5*	**ATV 71HU55N4**	**GV2 L20**	25	–	**LC1 D09●●**
7.5	*10*	**ATV 71HU75N4**	**GV3 L25**	32	–	**LC1 D25●●**
11	*15*	**ATV 71HD11N4**	**GV3 L32**	40	–	**LC1 D32●●**
15	*20*	**ATV 71HD15N4**	**GV3 L50**	50	–	**LC1 D40A●●**
18.5	*25*	**ATV 71HD18N4**	**GV3 L50**	50	–	**LC1 D40A●●**
22	*30*	**ATV 71HD22N4**	**GV3 L50**	50	–	**LC1 D50A●●**
30	*40*	**ATV 71HD30N4**	**GV3 L65**	65	–	**LC1 D65A●●**
37	*50*	**ATV 71HD37N4**	**NS80HMA80**	100	600	**LC1 D80●●**
45	*60*	**ATV 71HD45N4**	**NSX100●MA100**	100	600	**LC1 D95●●**
55	*75*	**ATV 71HD55N4**	**NSX160●MA150**	150	1350	**LC1 D115●●**
75	*100*	**ATV 71HD75N4**	**NSX250●MA220**	150	1350	**LC1 D115●●**
90	*125*	**ATV 71HD90N4**	**NSX250●MA220**	150	1350	**LC1 D150●●**
110	*150*	**ATV 71HC11N4**	**NSX250●MA220**	220	1980	**LC1 F150●●**
132	*200*	**ATV 71HC13N4**	**NSX250●MA220**	220	1980	**LC1 F225●●**
160	*250*	**ATV 71HC16N4**	**NSX400● Micrologic 1.3M**	320	1920	**LC1 F225●●**
200	*300*	**ATV 71HC20N4**	**NSX630● Micrologic 1.3M**	320	1920	**LC1 F330●●**
220	*350*	**ATV 71HC25N4**	**NSX630● Micrologic 1.3M**	320	1920	**LC1 F330●●**
250	*400*	**ATV 71HC25N4**	**NSX630● Micrologic 1.3M**	500	3000	**LC1 F400●●**
280	*450*	**ATV 71HC28N4**	**NSX630● Micrologic 1.3M**	500	3000	**LC1 F500●●**
315	*500*	**ATV 71HC31N4**	**NS800L Micrologic 2 or 5**	500	3000	**LC1 F500●●**
355	–	**ATV 71HC40N4**	**NS800L Micrologic 2 or 5**	500	3000	**LC1 F630●●**
400	*600*	**ATV 71HC40N4**	**NS800L Micrologic 2 or 5**	800	1600	**LC1 F630●●**
500	*700*	**ATV 71HC50N4**	**NS1000L Micrologic 2 or 5**	1000	2000	**LC1 F630●●**

(1) Standard power ratings for 400 V 50/60 Hz 4-pole motors.
The values expressed in HP conform to the NEC (National Electrical Code).
(2) NS80HMA, NSX●●●, NS800L, NS1000L: Products sold under the Merlin Gerin brand.
For references to be completed, replace the dot with the letter corresponding to the circuit-breaker breaking performance (B, F, N, H, S, L).
Breaking capacity of circuit-breakers according to standard IEC 60947-2:

Circuit-breaker	Icu (kA) for 440 V						
		B	F	N	H	S	L
GV2 L08, GV2 L10	130	–	–	–	–	–	–
GV2 L14…L20	20	–	–	–	–	–	–
GV3 L32…L65	50	–	–	–	–	–	–
NS80HMA	65	–	–	–	–	–	–
NSX100●MA… 250●MA	–	20	35	50	65	90	130
NSX400●, NSX630●	–	–	30	42	65	90	130
NS800L, NS1000L	–	–	–	–	–	–	130

(3) Composition of contactors:
LC1 D●●: 3 poles + 1 N/O auxiliary contact and 1 N/C auxiliary contact.
LC1 F●●●: 3 poles. To add auxiliary contacts or other accessories, please refer to the "Motor-starter solutions - Control and protection components" catalogue.
(4) Replace ●● with the control circuit voltage reference given in the table below:

	Volts ∼	24	48	110	220	230	240
LC1 D	50 Hz	**B5**	**E5**	**F5**	**M5**	**P5**	**U5**
	60 Hz	**B6**	**E6**	**F6**	**M6**	**–**	**U6**
	50/60 Hz	**B7**	**E7**	**F7**	**M7**	**P7**	**U7**
LC1 F185	50 Hz (LX1 coil)	**B5**	**E5**	**F5**	**M5**	**P5**	**U5**
	60 Hz (LX1 coil)	**–**	**E6**	**F6**	**M6**	**–**	**U6**
	40…400 Hz (LX9 coil)	**–**	**E7**	**F7**	**M7**	**P7**	**U7**
LC1 F265	40…400 Hz (LX1 coil)	**B7**	**E7**	**F7**	**M7**	**P7**	**U7**
LC1 F400…F630	40…400 Hz (LX1 coil)	**–**	**E7**	**F7**	**M7**	**P7**	**U7**
LC1 F780	40…400 Hz (LX1 coil)	**–**	**–**	**FE7**	**P7**	**P7**	**P7**

For other voltages available between 24 V and 660 V, or a DC control circuit, please contact our Customer Care Centre.

Variable speed drives
Altivar 71
Motor starters: 380…480 V supply voltage

PF095516



DF526158



DF5107482



NSX160●MA150
+
LC1 D115●●
+
ATV 71WD55N4

Motor starters for IP 54 drives

Motor Power *(1)*		Drive Reference	Circuit-breaker Reference *(2)*	Rating	Irm	Line contactor Reference *(3) (4)*
kW	*HP*			A	A	
Three-phase supply voltage 380…415 V 50/60 Hz - Type 2 coordination						
0.75	*1*	**ATV 71W075N4**	**GV2 L08**	4	–	**LC1 D18●●**
1.5	*2*	**ATV 71WU15N4**	**GV2 L10**	6.3	–	**LC1 D18●●**
2.2	*3*	**ATV 71WU22N4**	**GV2 L14**	10	–	**LC1 D18●●**
3	–	**ATV 71WU30N4**	**GV2 L16**	14	–	**LC1 D18●●**
4	*5*	**ATV 71WU40N4**	**GV2 L16**	14	–	**LC1 D18●●**
5.5	*7.5*	**ATV 71WU55N4**	**GV2 L22**	25	–	**LC1 D25●●**
7.5	*10*	**ATV 71WU75N4**	**GV3 L32**	32	–	**LC1 D40●●**
11	*15*	**ATV 71WD11N4**	**GV3 L40**	40	–	**LC1 D40●●**
15	*20*	**ATV 71WD15N4**	**GV3 L50**	50	–	**LC1 D50●●**
18.5	*25*	**ATV 71WD18N4**	**GV3 L50**	50	–	**LC1 D50●●**
22	*30*	**ATV 71WD22N4**	**GV3 L65**	65	–	**LC1 D65●●**
30	*40*	**ATV 71WD30N4**	**NS80HMA80**	80	480	**LC1 D65●●**
37	*50*	**ATV 71WD37N4**	**NSX100●MA100**	100	800	**LC1 D80●●**
45	*60*	**ATV 71WD45N4**	**NSX160●MA150**	150	1350	**LC1 D115●●**
55	*75*	**ATV 71WD55N4**	**NSX160●MA150**	150	1350	**LC1 D115●●**
75	*100*	**ATV 71WD75N4**	**NSX250●MA150**	150	1350	**LC1 D150●●**
Three-phase supply voltage 440…480 V 50/60 Hz - Type 2 coordination						
0.75	*1*	**ATV 71W075N4**	**GV2 L08**	4	–	**LC1 D18●●**
1.5	*2*	**ATV 71WU15N4**	**GV2 L10**	6.3	–	**LC1 D18●●**
2.2	*3*	**ATV 71WU22N4**	**GV2 L14**	10	–	**LC1 D18●●**
3	–	**ATV 71WU30N4**	**GV2 L14**	10	–	**LC1 D18●●**
4	*5*	**ATV 71WU40N4**	**GV2 L16**	14	–	**LC1 D18●●**
5.5	*7.5*	**ATV 71WU55N4**	**GV2 L22**	25	–	**LC1 D25●●**
7.5	*10*	**ATV 71WU75N4**	**GV3 L32**	32	–	**LC1 D40●●**
11	*15*	**ATV 71WD11N4**	**GV3 L40**	40	–	**LC1 D40●●**
15	*20*	**ATV 71WD15N4**	**GV3 L50**	50	–	**LC1 D50●●**
18.5	*25*	**ATV 71WD18N4**	**GV3 L50**	50	–	**LC1 D50●●**
22	*30*	**ATV 71WD22N4**	**GV3 L65**	65	–	**LC1 D65●●**
30	*40*	**ATV 71WD30N4**	**NSX100●MA100**	100	600	**LC1 D65●●**
37	*50*	**ATV 71WD37N4**	**NSX100●MA100**	100	600	**LC1 D80●●**
45	*60*	**ATV 71WD45N4**	**NSX160●MA100**	100	600	**LC1 D115●●**
55	*75*	**ATV 71WD55N4**	**NSX160●MA150**	150	1350	**LC1 D115●●**
75	*100*	**ATV 71WD75N4**	**NSX160●MA150**	150	1350	**LC1 D115●●**

(1) Standard power ratings for 400 V 50/60 Hz 4-pole motors.
The values expressed in HP conform to the NEC (National Electrical Code).
(2) NS80HMA, NSX●●●: Products sold under the Merlin Gerin brand.
For references to be completed, replace the dot with the letter corresponding to the circuit-breaker breaking performance (N, H, L).
Breaking capacity of circuit-breakers according to standard IEC 60947-2:

Circuit-breaker	Icu (kA) for 400 V						
	B	F	N	H	S	L	
GV2 L08…L14, GV3 L32	100	–	–	–	–	–	–
GV2 L16, L22, GV3 L40…L65	50	–	–	–	–	–	–
NS80HMA	70	–	–	–	–	–	–
NSX100●MA…250●MA	–	25	36	50	70	100	150
Circuit-breaker	**Icu (kA) for 440 V**						
	B	**F**	**N**	**H**	**S**	**L**	
GV2 L08, GV2 L10, GV3 L32	100	–	–	–	–	–	–
GV2 L14…L22	20	–	–	–	–	–	–
GV3 L40…L65	50	–	–	–	–	–	–
NSX100●MA, NSX160●MA	–	20	35	50	65	90	130

(3) Composition of contactors:
LC1 D●●: 3 poles + 1 N/O auxiliary contact and 1 N/C auxiliary contact.
(4) Replace ●● with the control circuit voltage reference given in the table below:

	Volts ∼	24	48	110	220	230	240
LC1 D	50 Hz	**B5**	**E5**	**F5**	**M5**	**P5**	**U5**
	60 Hz	**B6**	**E6**	**F6**	**M6**	**–**	**U6**
	50/60 Hz	**B7**	**E7**	**F7**	**M7**	**P7**	**U7**

For other voltages available between 24 V and 660 V, or a DC control circuit, please contact our Customer Care Centre.

Variable speed drives
Altivar 71
Motor starters: 380…480 V supply voltage

DF526131



DF526153





GV2 L16
+
LC1 D18●●
+
ATV 71PU40N4Z

Motor starters for IP 20 drives on base plate

Motor Power *(1)*		Drive Reference	Circuit-breaker Reference *(2)*	Rating	Irm	Line contactor Reference *(3) (4)*
kW	*HP*			A	A	
Three-phase supply voltage 380…415 V 50/60 Hz - Type 2 coordination						
0.75	*1*	**ATV 71P075N4Z**	**GV2 L08**	4	–	**LC1 D18●●**
1.5	*2*	**ATV 71PU15N4Z**	**GV2 L10**	6.3	–	**LC1 D18●●**
2.2	*3*	**ATV 71PU22N4Z**	**GV2 L14**	10	–	**LC1 D18●●**
3	–	**ATV 71PU30N4Z**	**GV2 L16**	14	–	**LC1 D18●●**
4	*5*	**ATV 71PU40N4Z**	**GV2 L16**	14	–	**LC1 D18●●**
5.5	*7.5*	**ATV 71PU55N4Z**	**GV2 L22**	25	–	**LC1 D25●●**
7.5	*10*	**ATV 71PU75N4Z**	**GV3 L32**	32	–	**LC1 D40●●**
Three-phase supply voltage 440…480 V 50/60 Hz - Type 2 coordination						
0.75	*1*	**ATV 71P075N4Z**	**GV2 L08**	4	–	**LC1 D18●●**
1.5	*2*	**ATV 71PU15N4Z**	**GV2 L10**	6.3	–	**LC1 D18●●**
2.2	*3*	**ATV 71PU22N4Z**	**GV2 L14**	10	–	**LC1 D18●●**
3	–	**ATV 71PU30N4Z**	**GV2 L14**	10	–	**LC1 D18●●**
4	*5*	**ATV 71PU40N4Z**	**GV2 L16**	14	–	**LC1 D18●●**
5.5	*7.5*	**ATV 71PU55N4Z**	**GV2 L22**	25	–	**LC1 D25●●**
7.5	*10*	**ATV 71PU75N4Z**	**GV3 L32**	32	–	**LC1 D40●●**

(1) Standard power ratings for 4-pole motors 50/60 Hz 400 V.
The values expressed in HP comply with the NEC (National Electrical Code).
(2) Breaking capacity of circuit-breakers according to standard IEC 60947-2:

Circuit-breaker	Icu (kA) for 400 V
GV2 L08…L14, GV3 L32	100
GV2 L16, GV2 L22	50

(3) Composition of contactors:
LC1 D●●: 3 poles + 1 N/O auxiliary contact and 1 N/C auxiliary contact.
(4) Replace ●● with the control circuit voltage reference given in the table below:

	Volts ∼	24	48	110	220	230	240
LC1 D	50 Hz	**B5**	**E5**	**F5**	**M5**	**P5**	**U5**
	60 Hz	**B6**	**E6**	**F6**	**M6**	**–**	**U6**
	50/60 Hz	**B7**	**E7**	**F7**	**M7**	**P7**	**U7**

For other voltages available between 24 V and 660 V, or a DC control circuit, please contact our Customer Care Centre.

Variable speed drives
Altivar 71
Motor starters: 690 V supply voltage

DF526131



DF526153



101014



GV2 L16
+
LC1 D25●●
+
ATV 71HU75Y

Motor starters for IP 20 drives

Motor Power *(1)*	Drive Reference	Circuit-breaker Reference *(2)*	Rating	Irm	Line contactor Reference *(3) (4)*
kW			A	A	
Three-phase supply voltage 690 V 50/60 Hz - Type 2 coordination					
2.2	**ATV 71HU22Y**	**GV2 L10**	6.3	78	**LC1 D25●●**
3	**ATV 71HU30Y**	**GV2 L10**	6.3	78	**LC1 D25●●**
4	**ATV 71HU40Y**	**GV2 L14**	10	138	**LC1 D25●●**
5.5	**ATV 71HU55Y**	**GV2 L14**	10	138	**LC1 D25●●**
7.5	**ATV 71HU75Y**	**GV2 L16**	14	170	**LC1 D25●●**
11	**ATV 71HD11Y**	**GV2 L20**	18	223	**LC1 D40●●**
15	**ATV 71HD15Y**	**GV2 L22**	25	327	**LC1 D40●●**
18.5	**ATV 71HD18Y**	**GV3 L25**	25	350	**LC1 D40●●**
22	**ATV 71HD22Y**	**GV3 L32**	32	448	**LC1 D65●●**
30	**ATV 71HD30Y**	**GV3 L40**	40	560	**LC1 D80●●**
37	**ATV 71HD37Y**	**GV3 L50**	50	700	**LC1 D80●●**
45	**ATV 71HD45Y**	**GV3 L65**	65	910	**LC1 D115●●**
55	**ATV 71HD55Y**	**NS100LMA100**	100	1100	**LC1 D115●●**
75	**ATV 71HD75Y**	**NS100LMA100**	100	1100	**LC1 D115●●**
90	**ATV 71HD90Y**	**NS400LMA320**	320	2880	**LC1 F265●●**
110	**ATV 71HC11Y**	**NS400LMA320**	320	2880	**LC1 F265●●**
132	**ATV 71HC13Y**	**NS400LMA320**	320	2880	**LC1 F265●●**
160	**ATV 71HC16Y**	**NS400LMA320**	320	2880	**LC1 F265●●**
200	**ATV 71HC20Y**	**NS400LMA320**	320	2880	**LC1 F330●●**
200	**ATV 71HC25Y**	**NS630bLB 5 LR OFF**	630	5670	**LC1 F630●●**
250	**ATV 71HC31Y**	**NS630bLB 5 LR OFF**	630	5670	**LC1 F630●●**
315	**ATV 71HC40Y**	**NS630bLB 5 LR OFF**	630	5670	**LC1 F630●●**
400	**ATV 71HC50Y**	**NS630bLB 5 LR OFF**	630	5670	**LC1 F630●●**
500	**ATV 71HC63Y**	**NS800LB 5 LR OFF**	800	7200	**LC1 F780●●**

(1) Standard power ratings for 690 V 50 Hz 4-pole motors.
(2) NS●●●: Products sold under the Merlin Gerin brand.
Breaking capacity of circuit-breakers according to standard IEC 60947-2:

Circuit-breaker	Icu (kA) for 690 V
GV2 L10…L22, GV3 L25, GV3 L32	4
GV3 L40…L65	5
NS●●●L, NS●●●bLB, NS800LB	75

(3) Composition of contactors:
LC1 D●●: 3 poles + 1 N/O auxiliary contact and 1 N/C auxiliary contact.
LC1 F●●●: 3 poles. To add auxiliary contacts or other accessories, please refer to the "Motor-starter solutions - Control and protection components" catalogue.
(4) Replace ●● with the control circuit voltage reference given in the table below:

	Volts ~	24	48	110	220	230	240
LC1 D	50 Hz	**B5**	**E5**	**F5**	**M5**	**P5**	**U5**
	60 Hz	**B6**	**E6**	**F6**	**M6**	–	**U6**
	50/60 Hz	**B7**	**E7**	**F7**	**M7**	**P7**	**U7**
LC1 F265, F330	40…400 Hz (LX1 coil)	**B7**	**E7**	**F7**	**M7**	**P7**	**U7**
LC1 F630	40…400 Hz (LX1 coil)	–	**E7**	**F7**	**M7**	**P7**	**U7**
LC1 F780	40…400 Hz (LX1 coil)	–	–	**F7**	**M7**	**P7**	**U7**

For other voltages available between 24 V and 660 V, or a DC control circuit, please contact our Customer Care Centre.

Variable speed drives
Altivar 71
Motor starters: 690 V supply voltage

PF103273



Motor starters for IP 20 drives

Motor Power *(1)*	Drive Reference	Circuit-breaker Reference *(2)*	Rating	Irm	Line contactor Reference *(3) (4)*
kW			**A**	**A**	
Three-phase supply voltage 690 V 50/60 Hz - Type 1 coordination					
250	**ATV 71HC25Y**	**NSX630LMA500**	500	–	**LC1 F400●●**
315	**ATV 71HC31Y**	**NSX630LMA500**	500	–	**LC1 F500●●**
400	**ATV 71HC40Y**	**NSX630LMA500**	500	–	**LC1 F630●●**
500	**ATV 71HC50Y**	**NS630bLB Micrologic 5**	630	–	**LC1 BL33●●**
630	**ATV 71HC63Y**	**NS800LB Micrologic 5**	800	–	**LC1 BL34●●**

(1) Standard power ratings for 690 V 50 Hz 4-pole motors.
(2) NSX630LMA, NS●●●: Products sold under the Merlin Gerin brand.
Breaking capacity of circuit-breakers according to standard IEC 60947-2:

PF526089



Circuit-breaker	Icu (kA) for 690 V
NSX630LMA	35
NS630bLB, NS800LB	75

(3) Composition of contactors:
LC1 F●●●, LC1 BL: 3 poles. To add auxiliary contacts or other accessories, please refer to the "Motor-starter solutions - Control and protection components" catalogue.
(4) Replace ●● with the control circuit voltage reference given in the table below:

	Volts ∼	24	48	110	220	230	240
LC1 F	40…400 Hz (LX1 coil)	**–**	**E7**	**F7**	**M7**	**P7**	**U7**
LC1 BL	50…400 Hz (WB1 coil)	**–**	**–**	**F**	**M**	**P**	**U**

For other voltages available between 24 V and 660 V, or a DC control circuit, please contact our Customer Care Centre.

PF107588SE



NSX630LMA500
+
LC1 F400
+
ATV 71HC25Y

Variable speed drives
Altivar 71
Pre-equipped IP 54 floor-standing enclosure kit

PF107555



IP 54 floor-standing enclosure kit

Presentation

The pre-equipped kit solution is used to create an IP 54 certified floor-standing enclosure for 90 kW to 500 kW, IP 20 Altivar 71 variable speed drives for a 380…480 V three-phase power supply.

This kit has been designed to:
- ■ Reduce setup time through:
- □ Simplified assembly
- □ Optimized thermal and mechanical dimensioning

The cooling systems used enable the equipment to be installed in difficult and dusty environments.

The temperature must not exceed + 45°C outside the enclosure or +50°C inside the enclosure; the temperature is monitored by a thermostat which can shut down the equipment if these limits are exceeded.

DF600349

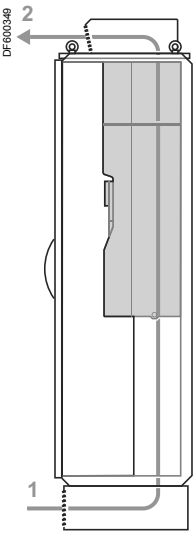

Cooling system with a single air circuit

Cooling systems

There are two types of cooling, depending on the model:
- ■ **VW3 A9 541 and VW3 A9 542** enclosure kits with a single air circuit for the power section:
- □ Air inlet via the plinth 1
- □ Air outlet on the enclosure roof 2

- ■ **VW3 A9 543…548** enclosure kits with three separate air circuits:
- □ One for the power section:
  - Air inlet via the plinth 1
  - Air outlet on the enclosure roof 2

- □ Two for the control section with cooling system using an air/air exchanger:
  - External air circuit 3 for cooling the heat exchanger 5
  - Internal air circuit 4 cooled by the heat exchanger 5

This system makes it possible to isolate the air circulating in the power section from the control section, thereby ensuring better protection against the entry of contaminants (in hostile and dusty environments).

DF600350

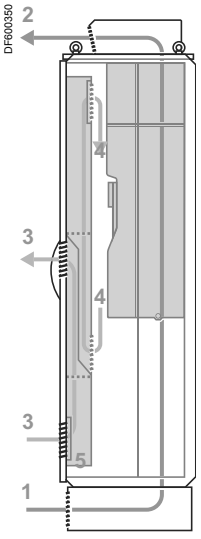

Cooling system with three separate air circuits

Options

There are two additional 600 and 800 mm empty enclosure kits **VW3 A9 55●** for adding accessories or options.

The additional empty enclosure kit must be installed on the left side of the pre-equipped IP 54 enclosure kit. In this case, the left-hand panel of the pre-equipped IP 54 enclosure kit is mounted on the left side of the additional empty enclosure kit which is supplied without side panels.

Variable speed drives
Altivar 71
Pre-equipped IP 54 floor-standing enclosure kit

Description

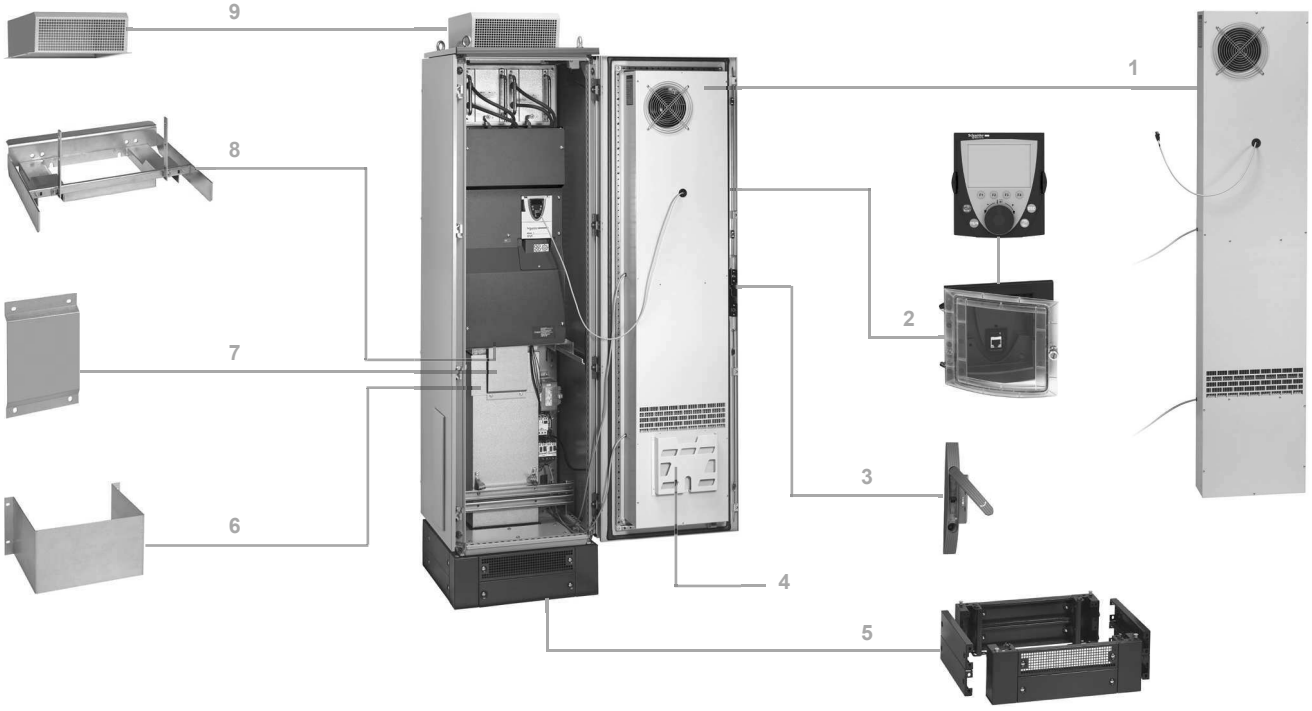

The kit includes:
- Air/air heat exchanger (except for enclosure kits **VW3 A9 541** or **VW3 A9 542**) 1
- IP 65 graphic display terminal remote mounting kit 2
- Handle with a pushbutton-operated opening mechanism 3
- Document holder 4
- Plinth 5
- Lower air duct 6
- EMC plate 7
- Drive support 8
- Roof extension 9
- Upper air duct
- 24 V ⎓ 600 mA supplementary power supply
- Fixing accessories, seals
- Technical documentation containing parts lists, electrical diagrams and mechanical assembly drawings

References

Description	For use with	Dimensions	Reference	Weight
		W x H x D		kg
Pre-equipped IP 54 floor-standing enclosure kit	ATV 71HD90N4 *(1)*	600 x 2362 x 642	**VW3 A9 541**	220.000
	ATV 71HC11N4 *(1)*	600 x 2362 x 642	**VW3 A9 542**	220.000
	ATV 71HC13N4 *(1)*	600 x 2362 x 642	**VW3 A9 543**	252.000
	ATV 71HC16N4 *(1)*	600 x 2362 x 642	**VW3 A9 544**	252.000
	ATV 71HC20N4 *(1)* without braking unit ATV 71HC25N4 *(1)* without braking unit ATV 71HC28N4 *(1)* without braking kit	800 x 2362 x 642	**VW3 A9 545**	300.000
	ATV 71HC20N4 *(1)* with braking unit VW3 A7 101 *(2)* ATV 71HC25N4 *(1)* with braking unit VW3 A7 101 *(2)* ATV 71HC28N4 *(1)* with braking unit VW3 A7 101 *(2)*	800 x 2362 x 642	**VW3 A9 546**	300.000
	ATV 71HC31N4 *(1)* without braking unit ATV 71HC40N4 *(1)* without braking unit	1000 x 2362 x 642	**VW3 A9 547**	360.000
	ATV 71HC50N4 *(1)* without braking unit	1200 x 2362 x 642	**VW3 A9 548**	470.000
	VW3 A7 102 braking unit	600 x 2362 x 642	**VW3 A9 549** *(3)*	252.000
600 mm additional empty enclosure kit	Options and accessories *(4)*	600 x 2209 x 642	**VW3 A9 550**	200.000
800 mm additional empty enclosure kit	Options and accessories *(4)*	800 x 2209 x 642	**VW3 A9 551**	210.000

(1) Drive to be ordered separately (see page 17).
(2) Braking unit for ATV 71HC31N4…HC50N4 drives to be ordered separately (see page 64).
(3) Enclosure kit VW3 A9 549 is designed to take braking unit VW3 A7 102 for ATV 71HC31N4…HC50N4 high-power drives; it is mounted on the left of enclosure kit VW3 A9 547 or VW3 A9 548. The braking unit must be ordered separately (see page 64).
(4) For any additional information, please contact our Customer Care Centre.

Variable speed drives
Altivar 71 Plus
“Ready to use” IP 54 floor-standing enclosure

PF095305



“Ready to use” IP 54 floor-standing enclosure

Presentation

Altivar 71 variable speed drives can also be supplied in a “ready to use” IP 54 certified floor-standing enclosure, which makes it possible to achieve an IP 54 degree of protection for Altivar 71 IP 20 drives.

This range has been designed to offer a simple and economical “ready to use” solution which keeps setup time to a minimum. The enclosures are supplied ready-assembled and ready to connect, making wiring fast and easy.

This standard version enables the equipment to be made available very quickly.

It covers motor power ratings from 90 kW to 500 kW for a 380…415 V three-phase supply.

DF600351

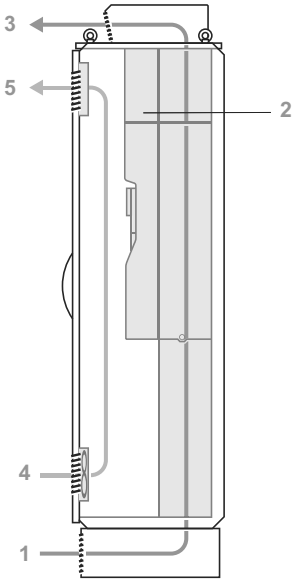

Cooling system with two separate air circuits

Cooling system

The cooling system used ensures optimum ventilation of the equipment, even in difficult and dusty environments.

Cooling is provided by two separate air circuits:

- One for the power section:
  - Air entry via an intake grille on the plinth 1
  - Air outlet via a metal cover with protection against water splashes on the enclosure roof 3

- One for the control section:
  - Air entry via an intake grille with fan (fitted with a filter) on the enclosure door 4
  - Air outlet through a filter 5

The incoming air temperature must be 0…+ 40°C.
The temperature is monitored by a thermostat which can shut down the equipment.

Variable speed drives: page 16
Options: page 52
Drive/option combinations: page 40

Variable speed drives
Altivar 71 Plus
“Ready to use” IP 54 floor-standing enclosure

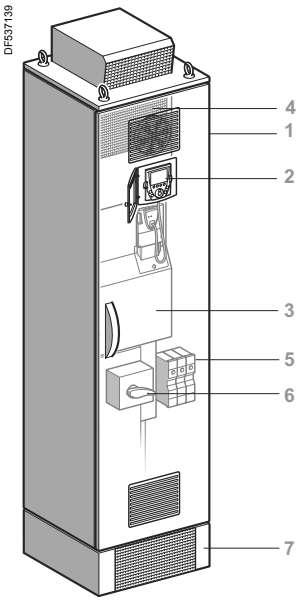

Description

The offer comprises:

- A wired, ready-assembled Sarel “Spacial SF” enclosure 1
- An ATV 71HD90N4…HC50N4 drive on heatsink 3
- An IP 65 remote mounting kit for graphic display terminal 2
- A DC choke 4
- Motor terminals 5
- A magnetic circuit-breaker 6
- A plinth 7

References

Degree of protection	Line supply	With drive	Dimensions	Reference	Weight
	Max. prospective line Isc *(1)*				
	kA		W x H x D		kg
Three-phase supply voltage 380…415 V 50/60 Hz					
IP 54	50	ATV 71HD90N4	600 x 2362 x 642	**ATV 71ES5D90N4**	300.000
		ATV 71HC11N4	600 x 2362 x 642	**ATV 71ES5C11N4**	300.000
		ATV 71HC13N4	600 x 2362 x 642	**ATV 71ES5C13N4**	320.000
		ATV 71HC16N4	600 x 2362 x 642	**ATV 71ES5C16N4**	330.000
		ATV 71HC20N4	800 x 2362 x 642	**ATV 71ES5C20N4**	440.000
		ATV 71HC25N4	800 x 2362 x 642	**ATV 71ES5C25N4**	440.000
		ATV 71HC28N4	800 x 2362 x 642	**ATV 71ES5C28N4**	440.000
		ATV 71HC31N4	1400 x 2362 x 642	**ATV 71ES5C31N4**	700.000
		ATV 71HC40N4	1400 x 2362 x 642	**ATV 71ES5C40N4**	720.000
		ATV 71HC50N4	1600 x 2362 x 642	**ATV 71ES5C50N4**	850.000

(1) These values are given for use with upstream fuses (see the characteristics on our website www.schneider-electric.com).

Variable speed drives: page 16
Options: page 52
Drive/option combinations: page 40

Variable speed drives
Altivar 71 Plus
IP 23 or IP 54 enclosure with separate air flows

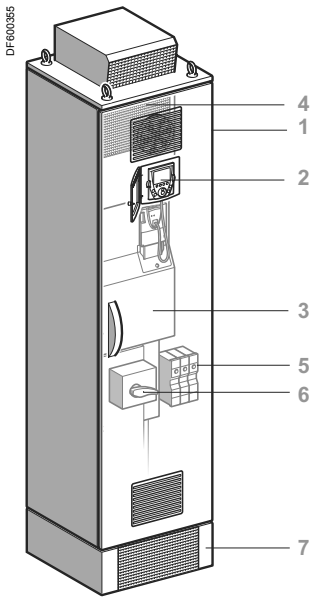

Standard ATV 71EXS5●●●●● offer

Presentation

The Altivar 71 Plus offer with separate air flows has been designed to meet requirements for harsh and highly polluted environments.

Altivar 71 variable speed drives are supplied ready-assembled in an IP 23 or IP 54 floor-standing enclosure to facilitate their installation and setup, while ensuring optimum ventilation.

The enclosures are supplied ready to connect.

The offer comprises two versions:

■ The **ATV 71EXS5●●●●●** version consists of a single enclosure providing IP 54 protection.
It covers motor power ratings from 500 kW to 2000 kW with three types of power supply:
□ 380…415 V three-phase, 90 kW to 500 kW (**ATV 71EXS5●●●N4**)
□ 500 V three-phase, 90 kW to 500 kW (**ATV 71EXS5●●●N**)
□ 690 V three-phase, 110 kW to 630 kW (**ATV 71EXS5●●●Y**)
Optimum enclosure ventilation is ensured by two separate cooling circuits for the control section and the power section.

■ The **ATV 71EXA●●●●●●** version consists of a set of 4 or more enclosures providing IP 23 or IP 54 protection, depending on the model.
It covers motor power ratings from 500 kW to 2000 kW with three types of power supply:
□ 380…415 V three-phase, 500 kW to 1300 kW (**ATV 71EXA●●●●N4**)
□ 500 V three-phase, 500 kW to 1500 kW (**ATV 71EXA●●●●N**)
□ 690 V three-phase, 600 kW to 2000 kW (**ATV 71EXA●●●●Y**)
Enclosure ventilation is also ensured by two separate cooling circuits, one for the control section and one for the power section.
In addition, an air circuit is integrated in the power enclosure to ensure excellent ventilation.

The incoming air temperature must be between 0°C and + 40°C (- 10°C and + 40°C with enclosure heater) and may reach + 50°C with derating (class 3K3 according to IEC/EN 60721-3-3).
The internal temperature is monitored by a thermostat which can shut down the equipment.

The entire range includes the choice of:
■ A standard offer
■ A modular offer, in which a wide selection of options can be incorporated depending on the drive rating

Standard ATV 71EXS5●●●●● offer

This consists of:

■ A wired, ready-assembled Sarel “Spacial SF” enclosure 1
■ An ATV 71HD90N4...HC50N4 or ATV 71HC11Y...HC63Y drive on heatsink 3
■ An IP 65 remote mounting kit for graphic display terminal 2
■ A DC choke 4 (ATV 71EXS5●●●N4) or a line choke in an additional enclosure (ATV 71EXS5●●●N and ATV 71EXS5●●●Y)
■ Motor terminals 5
■ A switch and fast-acting fuses 6
■ A plinth 7

See pages 108 and 109.

Variable speed drives
Altivar 71 Plus
IP 23 or IP 54 enclosure with separate air flows

DF504397

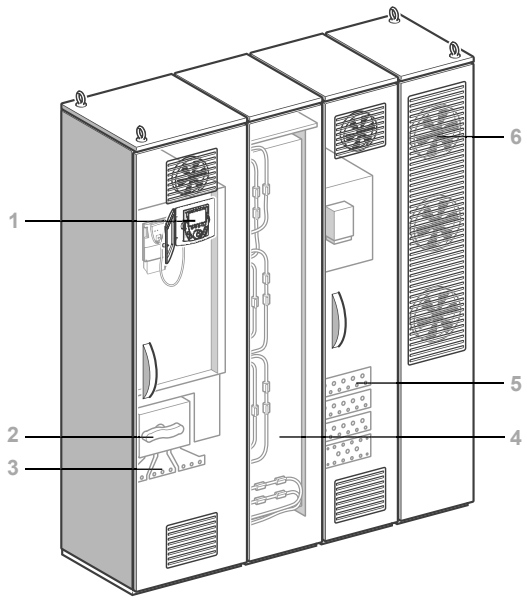

Standard ATV 71EXA●●●●● offer

Standard ATV 71EXA●●●●●● offer

The ATV 71EXA●●●●●● offer is supplied in wired, ready-assembled Sarel "Spacial SF" enclosures.

Configuration example for a standard ATV 71EXA●●●●●● offer:
- An enclosure for the power supply with an IP 65 remote mounting kit for graphic display terminal 1, a switch 2, terminals 3 and fast-acting fuses
- An enclosure for the power section cooled by an integrated air circuit 4
- An enclosure with motor connection terminals 5
- An enclosure for the power section cooling circuit with heat exchanger and fans 6

See pages 108 and 109.

Modular offer

This consists of:

- The ATV 71EXS5●●●●● or ATV 71EXA●●●●●● standard separate air flow offer
- One or more options (see pages 114 to 123)

As well as these specific options, all the options available for Altivar 71 drives can be used, at the same rating, with the enclosed drives offer (see the summary tables of possible drive, option and accessory combinations on pages 42, 43 and 48 to 51).

For any configuration other than those shown on pages 114 to 123, please contact our Customer Care Centre.

Common options

These options can be integrated, whatever the enclosure model, without any need for modifications to the enclosure:

- Adapter for 115 V ∼ logic inputs
- Encoder interface cards
- I/O expansion cards
- Controller Inside programmable card
- Modbus TCP Daisy Chain, EtherNet/IP, DeviceNet, InterBus, CC-Link, Modbus/Uni-Telway, PROFIBUS DP V0 or V1, EtherCAT communication cards
- "Preventa type AC" or "Preventa type ATE" fault relay
- PTC relays, PT100 relays
- Motor heater
- Additional 24 V ⎓ power supply
- Enclosure lighting
- Emergency stop button
- Key switch (Local/Remote)
- Power supply circuit for external fan

See pages 114 and 115. For all other options, please contact our Customer Care Centre.

Options dependent on the drive rating

These options depend on the drive rating. Some may lead to modification of the size of the enclosure:

- Braking unit
- Isolating handle for switch
- Circuit-breaker
- Line contactor
- Control transformer
- Ammeter
- Enclosure heater
- Motor choke
- Sinus filter
- Air conditioning

See pages 116 to 123. For all other options, please contact our Customer Care Centre.

Variable speed drives
Altivar 71 Plus
IP 23 or IP 54 enclosure with separate air flows

PF095305



ATV 71EXS5●●●●●

IP 23 or IP 54 enclosure with separate air flows

Degree of protection	Line supply Max. prospective line Isc *(2)*	With drive	Dimensions	Reference *(1)*	Weight
	kA		W x H x D		kg
Three-phase supply voltage 380…415 V 50/60 Hz					
IP 54	50	ATV 71HD90N4	600 x 2362 x 642	**ATV 71EXS5D90N4**	310.000
		ATV 71HC11N4	600 x 2362 x 642	**ATV 71EXS5C11N4**	310.000
		ATV 71HC13N4	600 x 2362 x 642	**ATV 71EXS5C13N4**	335.000
		ATV 71HC16N4	600 x 2362 x 642	**ATV 71EXS5C16N4**	345.000
		ATV 71HC20N4	800 x 2362 x 642	**ATV 71EXS5C20N4**	400.000
		ATV 71HC25N4	800 x 2362 x 642	**ATV 71EXS5C25N4**	480.000
		ATV 71HC28N4	800 x 2362 x 642	**ATV 71EXS5C28N4**	480.000
		ATV 71HC31N4	1400 x 2362 x 642	**ATV 71EXS5C31N4**	745.000
		ATV 71HC40N4	1400 x 2362 x 642	**ATV 71EXS5C40N4**	765.000
		ATV 71HC50N4	1600 x 2362 x 642	**ATV 71EXS5C50N4**	900.000
IP 23 or IP 54	100	ATV 71EC50N4 *(3)*	1800 x 2009 x 642	**ATV 71EXA●C50N4**	950.000
		ATV 71EC63N4 *(3)*	1800 x 2009 x 642	**ATV 71EXA●C63N4**	950.000
		ATV 71EC71N4 *(3)*	3400 x 2009 x 642	**ATV 71EXA●C71N4**	1925,000
		ATV 71EC90N4 *(3)*	3400 x 2009 x 642	**ATV 71EXA●C90N4**	1925.000
		ATV 71EM11N4 *(3)*	3400 x 2009 x 642	**ATV 71EXA●M11N4**	1925.000
		ATV 71EM13N4 *(3)*	3400 x 2009 x 642	**ATV 71EXA●M13N4**	1925.000
Three-phase supply voltage 500 V 50/60 Hz					
IP 54	50	ATV 71HC11Y	1000 x 2362 x 642	**ATV 71EXS5D90N**	435.000
		ATV 71HC13Y	1000 x 2362 x 642	**ATV 71EXS5C11N**	435.000
		ATV 71HC16Y	1000 x 2362 x 642	**ATV 71EXS5C13N**	485.000
		ATV 71HC20Y	1200 x 2362 x 642	**ATV 71EXS5C16N**	570.000
		ATV 71HC25Y	1200 x 2362 x 642	**ATV 71EXS5C20N**	620.000
		ATV 71HC31Y	1200 x 2362 x 642	**ATV 71EXS5C25N**	620.000
		ATV 71HC40Y	1600 x 2362 x 642	**ATV 71EXS5C31N**	620.000
		ATV 71HC50Y	1600 x 2362 x 642	**ATV 71EXS5C40N**	1000,000
		ATV 71HC63Y	1600 x 2362 x 642	**ATV 71EXS5C50N**	1000.000
IP 23 or IP 54	100	ATV 71EC63Y *(3)*	1800 x 2009 x 642	**ATV 71EXA●C50N**	950.000
		ATV 71EC80Y *(3)*	1800 x 2009 x 642	**ATV 71EXA●C63N**	950.000
		ATV 71EM10Y *(3)*	1800 x 2009 x 642	**ATV 71EXA●C80N**	950.000
		ATV 71EM12Y *(3)*	3400 x 2009 x 642	**ATV 71EXA●C90N**	1925.000
		ATV 71EM15Y *(3)*	3400 x 2009 x 642	**ATV 71EXA●M11N**	1925.000
		ATV 71EM18Y *(3)*	3400 x 2009 x 642	**ATV 71EXA●M13N**	1925.000
		ATV 71EM20Y *(3)*	3400 x 2009 x 642	**ATV 71EXA●M13N**	1925.000

*(1) To obtain the complete enclosure reference, replace the ● with a **2** for IP 23 protection or a **5** for IP 54 protection.*
*Example for IP 23 protection: ATV 71EXA●C63N4 becomes **ATV 71EXA2C63N4**.*
(2) These values are given for use with upstream fuses (see the characteristics on our website www.schneider-electric.com).
(3) Reference of the drive mounted in the enclosure; this reference cannot be ordered on its own.

Variable speed drives: page 16
Options: page 52
Drive/option combinations: page 40

Variable speed drives
Altivar 71 Plus
IP 23 or IP 54 enclosure with separate air flows

PF095306



ATV 71EXA●●●●●

IP 23 or IP 54 enclosure with separate air flows (continued)

Three-phase supply voltage 690 V 50/60 Hz

Degree of protection	Line supply Max. prospective line Isc *(2)*	With drive	Dimensions	Reference *(1)*	Weight
	kA		W x H x D		kg
IP 54	50	ATV 71HC11Y	1000 x 2362 x 642	**ATV 71EXS5C11Y**	435.000
		ATV 71HC13Y	1000 x 2362 x 642	**ATV 71EXS5C13Y**	485.000
		ATV 71HC16Y	1000 x 2362 x 642	**ATV 71EXS5C16Y**	485.000
		ATV 71HC20Y	1200 x 2362 x 642	**ATV 71EXS5C20Y**	570.000
		ATV 71HC25Y	1200 x 2362 x 642	**ATV 71EXS5C25Y**	620.000
		ATV 71HC31Y	1200 x 2362 x 642	**ATV 71EXS5C31Y**	620.000
		ATV 71HC40Y	1200 x 2362 x 642	**ATV 71EXS5C40Y**	910.000
		ATV 71HC50Y	1600 x 2362 x 642	**ATV 71EXS5C50Y**	1000,000
		ATV 71HC63Y	1600 x 2362 x 642	**ATV 71EXS5C63Y**	1000.000
IP 54 or IP 23	100	ATV 71EC63Y *(3)*	1800 x 2009 x 642	**ATV 71EXA●C63Y**	950.000
		ATV 71EC80Y *(3)*	1800 x 2009 x 642	**ATV 71EXA●C80Y**	950.000
		ATV 71EM10Y *(3)*	1800 x 2009 x 642	**ATV 71EXA●M10Y**	950.000
		ATV 71EM12Y *(3)*	3400 x 2009 x 642	**ATV 71EXA●M12Y**	1925,000
		ATV 71EM15Y *(3)*	3400 x 2009 x 642	**ATV 71EXA●M15Y**	1925.000
		ATV 71EM18Y *(3)*	3400 x 2009 x 642	**ATV 71EXA●M18Y**	1925.000
		ATV 71EM20Y *(3)*	3400 x 2009 x 642	**ATV 71EXA●M20Y**	1925.000

*(1) To obtain the complete enclosure reference, replace the ● with a **2** for IP 23 protection or a **5** for IP 54 protection.*
*Example for IP 23 protection: ATV 71EXA●C63N4 becomes **ATV 71EXA2C63N4**.*
(2) These values are given for use with upstream fuses (see the characteristics on our website www.schneider-electric.com).
(3) Reference of the drive mounted in the enclosure; this reference cannot be ordered on its own.

Variable speed drives: page 16
Options: page 52
Drive/option combinations: page 40

Variable speed drives
Altivar 71 Plus
IP 23 or IP 54 floor-standing enclosure compact version

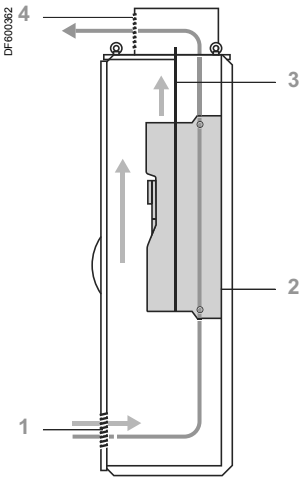

IP 23 cooling circuit

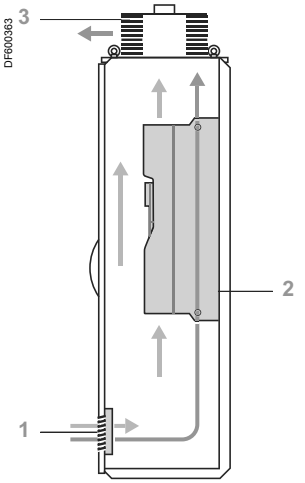

IP 54 cooling circuit

Presentation

The ATV 71EXC●●●●●● offer consists of a compact enclosure providing IP 23 or IP 54 protection for industrial environments and infrastructures.

Altivar 71 variable speed drives are supplied ready-assembled in an IP 23 or IP 54 enclosure to facilitate installation and setup and, in particular, to ensure optimum ventilation.

The enclosure is supplied ready to connect.

One common air circuit provides enclosure ventilation, cooling the power section and the control section. A fan 2 integrated in the drive provides ventilation for the power section.

- **IP 23 air circuit:**
  - Air intake 1 is via a grille on the lower part of the enclosure door.
  - Air outlet 4 is via a metal cover with protection against water splashes on the enclosure roof.
  - A separating plate 3 prevents internal turbulence.

- **IP 54 air circuit:**
  - The grille 1 on the lower part of the door is fitted with a protective filter.
  - The air outlet 3 on the enclosure roof is fitted with a fan with filter.

The incoming air temperature must be between 0°C and 40°C (- 10°C and 40°C with enclosure heater) and may reach + 50°C with derating (class 3K3 according to IEC/EN 60721-3-3).
The internal temperature is monitored by a thermostat which can shut down the equipment.

The ATV 71EXC●●●●●● offer covers motor power ratings from 90 kW to 630 kW with three types of power supply:
- 380…415 V three-phase, 90 kW to 500 kW (**ATV 71EXC●●●●N4**)
- 500 V three-phase, 90 kW to 500 kW (**ATV 71EXC●●●●N**)
- 690 V three-phase, 110 kW to 630 kW (**ATV 71EXC●●●●Y**)

It includes the choice of:
- A standard compact offer
- A modular offer, in which a wide selection of options can be incorporated depending on the drive rating.

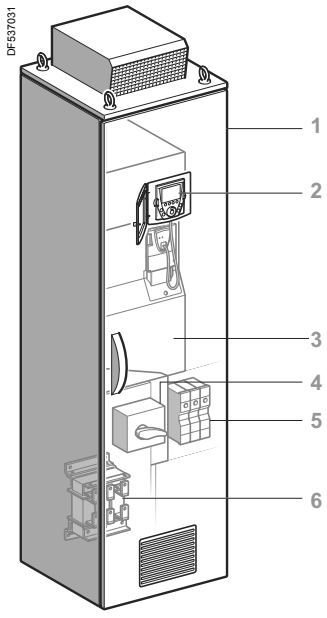

Standard ATV 71EXC●●●●●● offer

Standard compact offer

This consists of:

- A wired, ready-assembled Sarel “Spacial SF” enclosure 1
- An ATV 71HD90N4D…HC50N4D or ATV 71HC11Y…HC63Y drive on heatsink 3
- An IP 65 remote mounting kit for graphic display terminal 2
- A switch and fast-acting fuses 4
- Motor terminals 5
- A line choke 6

See pages 112 and 113.

Modular offer

This consists of:

- The standard compact offer
- One or more options (see pages 114 to 121)

As well as these specific options, all the options available for Altivar 71 drives can be used, at the same rating, with the enclosed drives offer (see the summary tables of possible drive, option and accessory combinations on pages 42, 43 and 48 to 51).

For any configuration other than those shown on pages 114 to 123, please contact our Customer Care Centre.

Common options

These options can be integrated, whatever the enclosure model, without any need for modifications to the enclosure:

- Adapter for 115 V ∼ logic inputs
- Encoder interface cards
- I/O expansion cards
- Controller Inside programmable card
- Modbus TCP Daisy chain, EtherNet/IP, DeviceNet, INTERBUS, CC-Link, Modbus/Uni-Telway, PROFIBUS DP V0 or V1, EtherCAT communication cards
- "Preventa type AC" or "Preventa type ATE" fault relay
- PTC relays, PT100 relays
- Motor heater
- Additional 24 V ⎓ power supply
- Emergency stop button
- Enclosure lighting
- Key switch (Local/Remote)
- Power supply circuit for external fan

See pages 114 and 115. For all other options, please contact our Customer Care Centre.

Options dependent on the drive rating

These options depend on the drive rating. Some may lead to modification of the size of the enclosure:

- Braking unit
- Isolating handle for switch
- Circuit-breaker
- Line contactor
- Control transformer
- Ammeter
- Enclosure heater
- Motor choke
- Sinus filter
- Plinth

See pages 116 to 123. For all other options, please contact our Customer Care Centre.

Variable speed drives
Altivar 71 Plus
IP 23 or IP 54 floor-standing enclosure compact version

PF095307



ATV 71EXC2●●●●●

IP 23 or IP 54 floor-standing enclosure compact version

Degree of protection	Line supply Max. prospective line Isc *(1)*	With drive	Dimensions	Reference	Weight
	kA		W x H x D		kg
Three-phase supply voltage 380…415 V 50/60 Hz					
IP 23	100	ATV 71HD90N4D	600 x 2162 x 642	**ATV 71EXC2D90N4**	315.000
		ATV 71HC11N4D	600 x 2162 x 642	**ATV 71EXC2C11N4**	315.000
		ATV 71HC13N4D	600 x 2162 x 642	**ATV 71EXC2C13N4**	335.000
		ATV 71HC16N4D	600 x 2162 x 642	**ATV 71EXC2C16N4**	350.000
		ATV 71HC20N4D	800 x 2162 x 642	**ATV 71EXC2C20N4**	385.000
		ATV 71HC25N4D	800 x 2162 x 642	**ATV 71EXC2C25N4**	485.000
		ATV 71HC28N4D	800 x 2162 x 642	**ATV 71EXC2C28N4**	485.000
		ATV 71HC31N4D	1200 x 2162 x 642	**ATV 71EXC2C31N4**	640.000
		ATV 71HC40N4D	1200 x 2162 x 642	**ATV 71EXC2C40N4**	680.000
		ATV 71HC50N4D	1200 x 2162 x 642	**ATV 71EXC2C50N4**	805.000
IP 54	100	ATV 71HD90N4D	600 x 2262 x 642	**ATV 71EXC5D90N4**	325.000
		ATV 71HC11N4D	600 x 2262 x 642	**ATV 71EXC5C11N4**	325.000
		ATV 71HC13N4D	600 x 2262 x 642	**ATV 71EXC5C13N4**	345.000
		ATV 71HC16N4D	600 x 2262 x 642	**ATV 71EXC5C16N4**	360.000
		ATV 71HC20N4D	800 x 2262 x 642	**ATV 71EXC5C20N4**	390.000
		ATV 71HC25N4D	800 x 2262 x 642	**ATV 71EXC5C25N4**	485.000
		ATV 71HC28N4D	800 x 2262 x 642	**ATV 71EXC5C28N4**	485.000
		ATV 71HC31N4D	1200 x 2262 x 642	**ATV 71EXC5C31N4**	660.000
		ATV 71HC40N4D	1200 x 2262 x 642	**ATV 71EXC5C40N4**	700.000
		ATV 71HC50N4D	1200 x 2262 x 642	**ATV 71EXC5C50N4**	835.000
Three-phase supply voltage 500 V 50/60 Hz					
IP 23	100	ATV 71HC11Y	600 x 2162 x 642	**ATV 71EXC2D90N**	365.000
		ATV 71HC13Y	600 x 2162 x 642	**ATV 71EXC2C11N**	415.000
		ATV 71HC16Y	600 x 2162 x 642	**ATV 71EXC2C13N**	415.000
		ATV 71HC20Y	800 x 2162 x 642	**ATV 71EXC2C16N**	500.000
		ATV 71HC25Y	800 x 2162 x 642	**ATV 71EXC2C20N**	550.000
		ATV 71HC31Y	800 x 2162 x 642	**ATV 71EXC2C25N**	550.000
		ATV 71HC40Y	1200 x 2162 x 642	**ATV 71EXC2C31N**	825.000
		ATV 71HC50Y	1200 x 2162 x 642	**ATV 71EXC2C40N**	915.000
		ATV 71HC63Y	1200 x 2162 x 642	**ATV 71EXC2C50N**	915.000
IP 54	100	ATV 71HC11Y	600 x 2262 x 642	**ATV 71EXC5D90N**	360.000
		ATV 71HC13Y	600 x 2262 x 642	**ATV 71EXC5C11N**	410.000
		ATV 71HC16Y	600 x 2262 x 642	**ATV 71EXC5C13N**	410.000
		ATV 71HC20Y	800 x 2262 x 642	**ATV 71EXC5C16N**	500.000
		ATV 71HC25Y	800 x 2262 x 642	**ATV 71EXC5C20N**	550.000
		ATV 71HC31Y	800 x 2262 x 642	**ATV 71EXC5C25N**	550.000
		ATV 71HC40Y	1200 x 2262 x 642	**ATV 71EXC5C31N**	855.000
		ATV 71HC50Y	1200 x 2262 x 642	**ATV 71EXC5C40N**	945,000
		ATV 71HC63Y	1200 x 2262 x 642	**ATV 71EXC5C50N**	945.000

(1) These values are given for use with upstream fuses (see the characteristics on our website www.schneider-electric.com).

Variable speed drives: page 16
Options: page 52
Drive/option combinations: page 40

Variable speed drives
Altivar 71 Plus
IP 23 or IP 54 floor-standing enclosure compact version

IP 23 or IP 54 floor-standing enclosure compact version (cont'd)

Degree of protection	Line supply Max. pros-pective line Isc *(1)*	With drive	Dimensions	Reference	Weight
	kA		W x H x D		kg
Three-phase supply voltage 690 V 50/60 Hz					
IP 23	100	ATV 71HC11Y	600 x 2162 x 642	**ATV 71EXC2C11Y**	365.000
		ATV 71HC13Y	600 x 2162 x 642	**ATV 71EXC2C13Y**	415.000
		ATV 71HC16Y	600 x 2162 x 642	**ATV 71EXC2C16Y**	415.000
		ATV 71HC20Y	800 x 2162 x 642	**ATV 71EXC2C20Y**	500.000
		ATV 71HC25Y	800 x 2162 x 642	**ATV 71EXC2C25Y**	550.000
		ATV 71HC31Y	800 x 2162 x 642	**ATV 71EXC2C31Y**	550.000
		ATV 71HC40Y	1200 x 2162 x 642	**ATV 71EXC2C40Y**	825.000
		ATV 71HC50Y	1200 x 2162 x 642	**ATV 71EXC2C50Y**	915.000
		ATV 71HC63Y	1200 x 2162 x 642	**ATV 71EXC2C63Y**	915.000
IP 54	100	ATV 71HC11Y	600 x 2262 x 642	**ATV 71EXC5C11Y**	360.000
		ATV 71HC13Y	600 x 2262 x 642	**ATV 71EXC5C13Y**	410.000
		ATV 71HC16Y	600 x 2262 x 642	**ATV 71EXC5C16Y**	410.000
		ATV 71HC20Y	800 x 2262 x 642	**ATV 71EXC5C20Y**	500.000
		ATV 71HC25Y	800 x 2262 x 642	**ATV 71EXC5C25Y**	550.000
		ATV 71HC31Y	800 x 2262 x 642	**ATV 71EXC5C31Y**	550.000
		ATV 71HC40Y	1200 x 2262 x 642	**ATV 71EXC5C40Y**	855.000
		ATV 71HC50Y	1200 x 2262 x 642	**ATV 71EXC5C50Y**	945.000
		ATV 71HC63Y	1200 x 2262 x 642	**ATV 71EXC5C63Y**	945.000

(1) These values are given for use with upstream fuses (see the characteristics on our website www.schneider-electric.com).

Variable speed drives
Altivar 71 Plus
Floor-standing enclosure with separate air flows or compact version
Common options

Common options without modification of the enclosure *(1)*		
Description	**Reference**	**Weight kg**
Adaptor for 115 V ∼ logic inputs	**VW3 A3E 101** *(2)*	0.200
Encoder interface card with RS 422, 5 V compatible differential outputs	**VW3 A3E 401** *(3)*	0.200
Encoder interface card with RS 422, 15 V compatible differential outputs	**VW3 A3E 402** *(3)*	0.200
Encoder interface card with 12 V open collector outputs	**VW3 A3E 403** *(3)*	0.200
Encoder interface card with 15 V open collector outputs	**VW3 A3E 404** *(3)*	0.200
Encoder interface card with 12 V push-pull outputs	**VW3 A3E 405** *(3)*	0.200
Encoder interface card with 15 V push-pull outputs	**VW3 A3E 406** *(3)*	0.200
Encoder interface card with 24 V push-pull outputs	**VW3 A3E 407** *(3)*	0.200
Resolver encoder interface card 1.25...5.6 V	**VW3 A3E 408** *(3)*	0.200
Universal encoder interface card with SinCos, SinCos Hiperface®, EnDat® or SSI 5, 8 or 12 V output	**VW3 A3E 409** *(3)*	0.200
Encoder interface card with RS 422 compatible differential outputs with encoder emulation (RS 422 ESIM)	**VW3 A3E 411** *(3)*	0.200
Logic I/O expansion card	**VW3 A3E 201** *(4)*	0.320
Extended I/O expansion card	**VW3 A3E 202** *(4)*	0.300
Controller Inside programmable card	**VW3 A3E 501** *(5) (6)*	0.300
Modbus TCP Daisy Chain communication card	**VW3 A3E 310D** *(7)*	0.300
EtherNet/IP communication card	**VW3 A3E 316** *(7)*	0.300
DeviceNet communication card	**VW3 A3E 309** *(7)*	0.300
INTERBUS communication card	**VW3 A3E 304** *(7)*	0.300
CC-Link communication card	**VW3 A3E 317** *(7)*	0.320
Modbus/Uni-Telway communication card	**VW3 A3E 303** *(7)*	0.300
PROFIBUS DP V0 communication card	**VW3 A3E 307** *(7)*	0.300
PROFIBUS DP V1 communication card	**VW3 A3E 307S371** *(7)*	0.300
EtherCAT communication card	**VW3 A3E 326**	0.300

(1) For any other configuration, please contact our Customer Care Centre.
(2) The characteristics of the VW3 A3E 101 adaptor are identical to those of the VW3 A3 101 adaptor (see page 25 or consult our website www.schneider-electric.com).
(3) The characteristics of the VW3 A3E 401 and 409…411 encoder interface cards are identical to those of the VW3 A3 401…409 and 411 encoder interface cards (see page 52 or consult our website www.schneider-electric.com).
(4) The characteristics of the VW3 A3E 201 and VW3 A3E 202 I/O expansion cards are identical to those of the VW3 A3 201 and VW3 A3 202 expansion cards (see page 53 or consult our website www.schneider-electric.com).
(5) The characteristics of the VW3 A3E 501 Controller Inside programmable card are identical to those of the VW3 A3 501 Controller Inside programmable card (see pages 54 to 57 or consult our website www.schneider-electric.com).
(6) If the total power consumption does not exceed 200 mA, this card can be powered by the drive. For a power consumption in excess of 200 mA, the additional 24 V ⎓ power supply option, reference VW3 AE 1401, should be ordered separately (see page 115).
(7) The characteristics of the VW3 A3E 303…326 communication cards are identical to those of the VW3 A3 303…326 communication cards (see page 58 to 63 or consult our website www.schneider-electric.com).

Variable speed drives
Altivar 71 Plus
Floor-standing enclosure with separate air flows or compact version
Common options

Common options without modification of the enclosure (continued) *(1)*		
Description	**Reference**	**Weight kg**
Remote control terminals X12	**VW3 AE 1201**	0.700
Remote option card terminals X13 *(2)* for I/O expansion cards VW3 A3E 201 and 202	**VW3 AE 1202**	0.900
External 230 V ∼ supply terminals	**VW3 AE 1301**	0.100
Additional 24 V ⎓ power supply, nominal current 2 A *(3)*	**VW3 AE 1401**	2.200
External 24 V ⎓ supply terminals	**VW3 AE 1402**	0.100
Emergency stop button	**VW3 AE 1501**	0.100
"Preventa type AC" fault relay	**VW3 AE 1502**	0.100
"Preventa type ATE" fault relay	**VW3 AE 1503**	0.100
Enclosure lighting	**VW3 AE 1601**	1.500
Key switch (Local/Remote)	**VW3 AE 1801**	0.200
Additional electrical input isolation	**VW3 AE 1901**	0.100
Additional electrical output isolation	**VW3 AE 1902**	0.100
PTC relay	**VW3 AE 2001**	0.100
PTC relay with PTB (ATEX) certification *(4)*	**VW3 AE 2002**	0.100
PT100 relay for motor winding	**VW3 AE 2003**	0.300
PT100 relay for motor bearings	**VW3 AE 2004**	0.300
PT100 relay for line supply transformer	**VW3 AE 2005**	0.300
Motor heater 200 W, 230 V	**VW3 AE 2101**	0.200
Power supply circuit with protection for 1000 W external fan	**VW3 AE 2102**	0.200
Relay for logic output	**VW3 AE 2201**	0.100
Voltmeter 380…415 V three-phase supply voltage	**VW3 AE 2301**	0.400
Voltmeter 500 V three-phase supply voltage	**VW3 AE 2302**	0.400
Voltmeter 690 V three-phase supply voltage	**VW3 AE 2303**	0.400
Insulation monitoring device on an IT system	**VW3 AE 2601**	5.000
Selector for IT system	**VW3 AE 2701**	–

(1) For any other configuration, please contact our Customer Care Centre.
(2) The X13 terminals, reference VW3 AE 1202, include the X12 terminals, reference VW3 AE 1201.
(3) Essential if the total power consumption of the option cards exceeds 200 mA.
(4) ATEX: Please refer to the ATEX guide which is available on our website www.schneider-electric.com.

Variable speed drives

Altivar 71 Plus

Floor-standing enclosure with separate air flows or compact version

Options dependent on the drive rating

Options dependent on the drive rating *(1)*

Three-phase supply voltage 380…415 V 50/60 Hz

Description	For ATV 71 enclosure	Reference	Weight kg
Resistance braking unit	EXC●C20N4…C28N4 EXS5C20N4…C28N4	**VW3 A7E 101** *(3)*	31.000
	EXC●C31N4…C50N4	**VW3 AE 1003** *(2)*	190.000
	EXS5C31N4…C50N4	**VW3 A7E 102** *(3)*	205.000
Isolating handle for switch	EXC●D90N4, C11N4 EXS5D90N4, C11N4	**VW3 AE 0103**	1.000
	EXC●C13N4…C28N4 EXS5C13N4…C28N4	**VW3 AE 0104**	2.000
	EXC●C31N4…C50N4 EXS5C31N4…C50N4 EXA●C50N4...M13N4	**VW3 AE 0105**	2.000
Circuit-breaker *(4)*	EXC●D90N4, C11N4 EXS5D90N4, C11N4	**VW3 AE 0106**	–
	EXC●C13N4…C20N4 EXS5C13N4…C20N4	**VW3 AE 0107**	1.400
	EXC●C25N4…C31N4 EXS5C25N4…C31N4	**VW3 AE 0109**	1.400
	EXC●C40N4 EXS5C40N4	**VW3 AE 0111**	9.400
	EXC●C50N4 EXS5C50N4 EXA●C50N4	**VW3 AE 0112**	9.400
	EXA●C63N4	**VW3 AE 0113**	–
	EXA●C71N4	**VW3 AE 0174**	–
	EXA●C90N4	**VW3 AE 0166**	–
	EXA●M11N4	**VW3 AE 0167**	–
	EXA●M13N4	**VW3 AE 0168**	–
Door handle for circuit-breaker	EXC●D90N4, C11N4 EXS5D90N4, C11N4	**VW3 AE 0114**	1.000
	EXC●C13N4…C31N4 EXS5C13N4…C31N4	**VW3 AE 0115**	2.000
	EXC●C40N4, C50N4 EXS5C40N4, C50N4 EXA●C50N4, M13N4	**VW3 AE 0116**	2.000
Line contactor	EXC●D90N4, C11N4 EXS5D90N4, C11N4	**VW3 AE 0206**	7.000
	EXC●C13N4, C16N4 EXS5C13N4	**VW3 AE 0218**	10.000
	EXS5C16N4	**VW3 AE 0215**	7.000
	EXC●C20N4	**VW3 AE 0209**	12.000
	EXS5C20N4…C28N4	**VW3 AE 0216**	10.000
	EXC●C25N4…C31N4 EXS5C31N4	**VW3 AE 0210**	14.000
	EXC●C40N4 EXS5C40N4	**VW3 AE 0212**	24 ,000
	EXC●C50N4 EXS5C50N4	**VW3 AE 0213**	28.000
	EXA●C50N4, C63N4 *(5)*	**VW3 AE 0227**	42.000
	EXA●C71N4...M13N4	**VW3 AE 0224**	84.000

(1) For any other configuration, please contact our Customer Care Centre.
(2) This option depends on the drive rating and may lead to modification of the size of the enclosure. Please refer to the dimensions on our website www.schneider-electric.com.
(3) The characteristics of the VW3 A7E 101 and VW3 A7E 102 braking units are identical to those of the VW3 A7 101 and VW3 A7 102 braking units (see page 64 or consult our website www.schneider-electric.com).
(4) The circuit-breaker replaces the switch in the standard offer.
*(5) If a line contactor and choke are used, order reference **VW3 AE 0225** (50.000 kg) (see note 2).*

Variable speed drives: page 16 | Options: page 52 | Drive/option combinations: page 40

Variable speed drives

Altivar 71 Plus

Floor-standing enclosure with separate air flows or compact version

Options dependent on the drive rating

Options dependent on the drive rating (continued) *(1)*

Three-phase supply voltage 380…415 V 50/60 Hz (continued)

Description	For ATV 71 enclosure	Reference	Weight kg
Switch for 12-pulse input	EXA●C50N4	**VW3 AE 2415**	–
	EXA●C63N4	**VW3 AE 2416**	–
	EXA●C71N4	**VW3 AE 2417**	–
	EXA●C90N4	**VW3 AE 2418**	–
	EXA●M11N4	**VW3 AE 2419**	–
	EXA●M13N4	**VW3 AE 2420**	–
Line choke	EXA●C50N4...C63N4	**VW3 AE 2501**	132.000
	EXA●C71N4	**VW3 AE 2502** *(2)*	202.000
	EXA●C90N4...M13N4	**VW3 AE 2503** *(2)*	264.000
500 VA ∼ control transformer, 230 V ∼ output	EXC●D90N4…C28N4 EXS5D90N4…C28N4	**VW3 AE 0302**	8.000
800 VA ∼ control transformer, 230 V ∼ output	EXC●C31N4…C50N4 EXS5C31N4…C50N4	**VW3 AE 0303**	11.000
Ammeter	EXC●D90N4…C13N4 EXS5D90N4…C13N4	**VW3 AE 0406**	0.200
	EXC●C16N4, C20N4 EXS5C16N4, C20N4	**VW3 AE 0426**	0.200
	EXC●C25N4…C31N4 EXS5C25N4…C31N4	**VW3 AE 0409**	0.200
	EXC●C40N4 EXS5C40N4	**VW3 AE 0427**	0.200
	EXC●C50N4 EXS5C50N4	**VW3 AE 0411**	0.200
	EXA●C50N4	**VW3 AE 0411** *(3)* **VW3 AE 0421** *(4)*	0.200
	EXA●C63N4, C71N4	**VW3 AE 0413** *(3)* **VW3 AE 0421** *(4)*	0.200
	EXA●C90N4	**VW3 AE 0414** *(3)* **VW3 AE 0429** (4)	0.200
	EXA●M11N4	**VW3 AE 0415** *(3)* **VW3 AE 0423** *(4)*	0.200
	EXA●M13N4	**VW3 AE 0416** *(3)* **VW3 AE 0424** *(4)*	0.200
Enclosure heater	EXC●D90N4…C28N4 EXS5D90N4…C28N4	**VW3 AE 0501**	0.500
	EXC●C31N4…C50N4 EXS5C31N4…C50N4 EXA●C50N4, C63N4	**VW3 AE 0502**	1.000
	EXA●C71N4...M13N4	**VW3 AE 0503**	1.500

(1) For any other configuration, please contact our Customer Care Centre.
(2) These options depend on the drive rating and may lead to modification of the size of the enclosure. Please refer to the dimensions on our website www.schneider-electric.com.
(3) For 6-pulse mounting.
(4) For 12-pulse mounting.

Variable speed drives: page 16 | Options: page 52 | Drive/option combinations: page 40

Variable speed drives

Altivar 71 Plus

Floor-standing enclosure with separate air flows or compact version

Options dependent on the drive rating

Options dependent on the drive rating (continued) *(1)*

Three-phase supply voltage 380…415 V 50/60 Hz (continued)

Description	For ATV 71 enclosure	Reference	Weight kg
Motor choke	EXC●D90N4	**VW3 AE 0603**	17.000
	EXS5D90N4	**VW3 AE 0615**	37.000
	EXC●C11N4, C13N4	**VW3 AE 0604**	35.000
	EXS5C11N4, C13N4	**VW3 AE 0617**	55.000
	EXC●C16N4, C20N4	**VW3 AE 0605**	64.000
	EXS5C16N4	**VW3 AE 0619** *(2)*	157.000
	EXS5C20N4	**VW3 AE 0620**	160.000
	EXC●C25N4, C28N4	**VW3 AE 0606**	102.000
	EXS5C25N4, C28N4	**VW3 AE 0621** *(2)*	192.000
	EXC2C31N4	**VW3 AE 0607** *(2)*	192.000
	EXC5C31N4	**VW3 AE 0622** *(2)*	197.000
	EXS5C31N4	**VW3 AE 0622** *(2)*	197.000
	EXC2C40N4	**VW3 AE 0609** *(2)*	228.000
	EXC5C40N4	**VW3 AE 0613** *(2)*	228.000
	EXS5C40N4	**VW3 AE 0624** *(2)*	228.000
	EXC2C50N4	**VW3 AE 0610** *(2)*	234.000
	EXC5C50N4	**VW3 AE 0614** *(2)*	234.000
	EXS5C50N4	**VW3 AE 0625** *(2)*	234.000
	EXA●C50N4, C63N4	**VW3 AE 0635**	132.000
	EXA●C71N4...M13N4	**VW3 AE 0636**	264.000
Sinus filter *(2) (3)*	EXC2D90N4	**VW3 AE 0641**	318.000
	EXC5D90N4	**VW3 AE 0653**	348.000
	EXS5D90N4	**VW3 AE 0665**	318.000
	EXC2C11N4	**VW3 AE 0642**	318.000
	EXC5C11N4	**VW3 AE 0654**	325.000
	EXS5C11N4	**VW3 AE 0666**	325.000
	EXC2C13N4	**VW3 AE 0644**	365.000
	EXC5C13N4	**VW3 AE 0656**	365.000
	EXS5C13N4	**VW3 AE 0668**	365.000
	EXC2C16N4	**VW3 AE 0645**	373.000
	EXC5C16N4	**VW3 AE 0657**	373.000
	EXS5C16N4	**VW3 AE 0669**	373.000
	EXC2C20N4	**VW3 AE 0647**	384.000
	EXC5C20N4	**VW3 AE 0659**	394.000
	EXS5C20N4	**VW3 AE 0671**	394.000
	EXC2C25N4, C28N4	**VW3 AE 0648**	434.000
	EXC5C25N4, C28N4	**VW3 AE 0660**	434.000
	EXS5C25N4, C28N4	**VW3 AE 0672**	434.000
	EXC2C31N4	**VW3 AE 0649**	445.000
	EXC5C31N4	**VW3 AE 0661**	445.000
	EXS5C31N4	**VW3 AE 0673**	445.000
	EXC2C40N4	**VW3 AE 0651**	870.000
	EXC5C40N4	**VW3 AE 0663**	900.000
	EXS5C40N4	**VW3 AE 0675**	900.000
	EXC2C50N4	**VW3 AE 0652**	900.000
	EXC5C50N4	**VW3 AE 0664**	930.000
	EXS5C50N4	**VW3 AE 0676**	930.000

(1) For any other configuration, please contact our Customer Care Centre.
(2) These options depend on the drive rating and may lead to modification of the size of the enclosure. Please refer to the dimensions on our website www.schneider-electric.com.
(3) The sinus filter option is not compatible with the motor choke option.

Variable speed drives: page 16 | Options: page 52 | Drive/option combinations: page 40

Variable speed drives

Altivar 71 Plus

Floor-standing enclosure with separate air flows or compact version

Options dependent on the drive rating

Options dependent on the drive rating (continued) *(1)*

Three-phase supply voltage 380…415 V 50/60 Hz (continued)

Description		For ATV 71 enclosure	Reference	Weight kg
200 mm plinth	Without motor choke	EXC●D90N4…C16N4	**VW3 AE 0801**	11.000
		EXC●C20N4…C28N4	**VW3 AE 0802**	13.000
		EXC●C31N4, C40N4	**VW3 AE 0803**	15.000
		EXC●C50N4	**VW3 AE 0804**	17.000
		EXA●C63N4, C71N4	**VW3 AE 0820** *(2)*	38.000
		EXA●C90N4…M14N4	**VW3 AE 0822**	69.000
	With motor choke	EXC●D90N4…C16N4	**VW3 AE 0801**	11.000
		EXC●C20N4…C28N4	**VW3 AE 0802**	13.000
		EXC●C31N4, C40N4	**VW3 AE 0805**	24.000
		EXC●C50N4	**VW3 AE 0806**	26.000
		EXA●C50N4...C63N4	**VW3 AE 0820** *(2)*	38.000
		EXA●C71N4...M13N4	**VW3 AE 0822**	69.000
	With line choke	EXA●C50N4...C63N4	**VW3 AE 0820** *(2)*	38.000
		EXA●C71N4...M13N4	**VW3 AE 0824**	78.000
Plinth for braking unit		EXC●C31N4…C50N4	**VW3 AE 0810**	9.000
Plinth for sinus filter		EXC●D90N4…C31N4	**VW3 AE 0816**	11.000
		EXC●C40N4, C50N4	**VW3 AE 0817**	13.000

(1) For any other configuration, please contact our Customer Care Centre.
*(2) If a line contactor and choke are used, order reference **VW3 AE 821** (40.000 kg).*

Variable speed drives

Altivar 71 Plus

Floor-standing enclosure with separate air flows or compact version

Options dependent on the drive rating

Options dependent on the drive rating (continued) *(1)*

Three-phase supply voltage 500 V and 690 V 50/60 Hz

Description	For ATV 71 enclosure		Reference	Weight
	500 V	690 V		kg
Resistance braking unit	EXC●C16N…C25N	EXC●C20Y…C31Y	**VW3 AE 1004** *(2)*	190.000
	EXS5C16N…C25N	EXS●C20Y…C31Y	**VW3 A7E 103** *(2) (3)*	205.000
	EXC●C31N…C50N	EXC●C40Y…C63Y	**VW3 AE 1005** *(2)*	190.000
	EXS5C31N…C50N	EXS5C40Y…C63Y	**VW3 A7E 104** *(2) (3)*	205.000
Isolating handle for switch	EXC●D90N…C13N EXS5D90N…C13N	EXC●C11Y…C16Y EXS5C11Y…C16Y	**VW3 AE 0103**	1.000
	EXC●C16N…C25N EXS5C16N…C25N	EXC●C20Y…C31Y EXS5C20Y…C31Y	**VW3 AE 0104**	2.000
	EXC●C31N…C50N EXS5C31N…C50N EXA●C50N…M15N	EXC●C40Y…C63Y EXS5C40Y…C63Y EXA●C63Y…M20Y	**VW3 AE 0105**	2.000
Circuit-breaker *(4)*	EXC●D90N EXS5D90N	–	**VW3 AE 0141**	–
	EXC●C11N EXS5C11N	–	**VW3 AE 0142**	–
	–	EXC●C11Y, C13Y	**VW3 AE 0143**	4.000
	EXC●C13N EXS5C13N	–	**VW3 AE 0144**	–
	–	EXC●C16Y	**VW3 AE 0145**	4.000
	EXC●C16N, C20N EXS5C16N, C20N	EXC●C20Y	**VW3 AE 0146**	1.400
	EXC●C25N EXS5C25N	EXC●C25Y…C31Y	**VW3 AE 0147**	1.400
	EXC●C31N, C40N EXS5C31N, C40N	EXC●C40Y...C63Y	**VW3 AE 0150**	–
	EXC●C50N EXS5C50N	–	**VW3 AE 0151**	–
	EXA●C50N	EXA●C63Y	**VW3 AE 0151**	–
	EXA●C63N	EXA●C80Y	**VW3 AE 0169**	–
	EXA●C80N	EXA●M10Y	**VW3 AE 0170**	–
	EXA●C90N	EXA●M12Y	**VW3 AE 0175**	–
	EXA●M11N	EXA●M15Y	**VW3 AE 0171**	–
	EXA●M13N	EXA●M18Y	**VW3 AE 0172**	–
	EXA●M15N	EXA●M20Y	**VW3 AE 0173**	–

(1) For any other configuration, please contact our Customer Care Centre.
(2) These options depend on the drive rating and may lead to modification of the size of the enclosure. Please refer to the dimensions on our website www.schneider-electric.com.
(3) The characteristics of the VW3 A7E 103 and VW3 A7E 104 braking units are identical to those of the VW3 A7 103 and VW3 A7 104 braking units (see page 64 or consult our website www.schneider-electric.com).
(4) The circuit-breaker replaces the switch in the standard offer.
*(5) If a line contactor and choke are used, order reference **VW3 AE 0225** (50.000 kg) (see note 2).*

Variable speed drives

Altivar 71 Plus

Floor-standing enclosure with separate air flows or compact version

Options dependent on the drive rating

Options dependent on the drive rating (continued) *(1)*

Three-phase supply voltage 500 V and 690 V 50/60 Hz

Description	For ATV 71 enclosure		Reference	Weight
	500 V	690 V		kg
Door handle for circuit-breaker	EXC●D90N…C13N EXS5D90N…C13N	–	**VW3 AE 0114**	1.000
	EXC●C16N…C25N EXS5C16N…C25N	EXC●C11Y…C31Y EXS5C11Y…C31Y	**VW3 AE 0115**	2,000
	EXC●C31N…C50N EXS5C31N…C50N	EXC●C40Y…C63Y EXS5C40Y…C63Y	**VW3 AE 0116**	2,000
	EXA●C50N…C80N	EXA●C63Y…M10Y	**VW3 AE 0116**	2,000
	EXA●C90N...M15N	EXA●M12Y...M20Y	**–**	–
Line contactor	EXC●D90N EXS5D90N	–	**VW3 AE 0205**	4.000
	EXC●C11N EXS5C11N	–	**VW3 AE 0206**	7.000
	EXC●C13N, C16N EXS5C13N, C16N	EXC●C11Y…C16Y EXS5C11Y…C16Y	**VW3 AE 0218**	10.000
	–	EXC●C20Y EXS5C20Y	**VW3 AE 0208**	11.000
	EXC●C20N EXS5C20N	EXC●C25Y EXS5C25Y	**VW3 AE 0209**	12.000
	EXC●C25N EXS5C25N	EXC●C31Y EXS5C31Y	**VW3 AE 0210**	14.000
	–	EXC●C40Y EXS5C40Y	**VW3 AE 0219**	22.000
	EXC●C31N EXS5C31N	EXC●C50Y EXS5C50Y	**VW3 AE 0221**	20.000
	EXC●C40N EXS5C40N	EXC●C63Y EXS5C63Y	**VW3 AE 0212**	24.000
	EXC●C50N EXS5C50N	EXA●C63Y...M10Y	**VW3 AE 0213**	28.000
	EXA●C50N...C80N	EXA●M12Y…M20Y	**VW3 AE 0227** *(2)*	42.000
	EXA●C90N…M15N	EXC●C50Y EXS5C50Y	**VW3 AE 0226**	84.000
Switch for 12-pulse input	EXA●C50N	EXA●C63Y	**VW3 AE 2414**	–
	EXA●C63N	EXA●C80Y	**VW3 AE 2415**	–
	EXA●C80N	EXA●M10Y	**VW3 AE 2416**	–
	EXA●C90N	EXA●M12Y	**VW3 AE 2417**	–
	EXA●M11N	EXA●M15Y	**VW3 AE 2418**	–
	EXA●M13N	EXA●M18Y	**VW3 AE 2419**	–
	EXA●M15N	EXA●M20Y	**VW3 AE 2420**	–

(1) For any other configuration, please contact our Customer Care Centre.

*(2) If a line contactor and choke are used, order reference **VW3 AE 0225** (50.000 kg).*

Variable speed drives

Altivar 71 Plus

Floor-standing enclosure with separate air flows or compact version

Options dependent on the drive rating

Options dependent on the drive rating (continued) *(1)*

Three-phase supply voltage 500 V and 690 V 50/60 Hz (continued)

Description	For ATV 71 enclosure		Reference	Weight
	500 V	690 V		kg
Line choke	EXA●C50N	EXA●C63Y	**VW3 AE 2504**	154.000
	EXA●C63N	EXA●C80Y	**VW3 AE 2505**	121.000
	EXA●C80N	EXA●M10Y	**VW3 AE 2506**	136.000
	EXA●C90N	EXA●M12Y	**VW3 AE 2507**	308.000
	EXA●M11N, M13N	EXA●M15Y, M18Y	**VW3 AE 2508**	242.000
	EXA●M15N	EXA●M20Y	**VW3 AE 2509**	273.000
Ammeter	EXC●D90N EXS5D90N	EXC●C11Y EXS5C11Y	**VW3 AE 0404**	0.200
	EXC●C11N…C16N EXS5C11N…C16N	EXC●C13Y…C25Y EXS5C13Y…C25Y	**VW3 AE 0406**	0.200
	EXC●C20N, C25N EXS5C20N, C25N	EXC●C31Y, C40Y EXS5C31Y, C40Y	**VW3 AE 0426**	0.200
	EXC●C31N…C40N EXS5C31N…C40N	EXC●C50Y, C63Y EXS5C50Y, C63Y	**VW3 AE 0409**	0.200
	–	EXA●C63Y	**VW3 AE 0409** *(2)* **VW3 AE 0428** *(3)*	0.200
	EXC●C50N EXS5C50N	–	**VW3 AE 0427**	0.200
	–	EXA●C80Y	**VW3 AE 0427** *(2)* **VW3 AE 0421** *(3)*	0.200
	EXA●C50N	–	**VW3 AE 0427** *(2)* **VW3 AE 0428** *(3)*	0.200
	EXA●C63N	EXA●M10Y	**VW3 AE 0411** *(2)* **VW3 AE 0421** *(3)*	0.200
	EXA●C80N, C90N	EXA●M12Y	**VW3 AE 0413** *(2)* **VW3 AE 0421** *(3)*	0.200
	EXA●M11N	EXA●M15Y	**VW3 AE 0414** *(2)* **VW3 AE 0429** *(3)*	0.200
	EXA●M13N	EXA●M18Y, M20Y	**VW3 AE 0415** *(2)* **VW3 AE 0423** *(3)*	0.200
	EXA●M15N	–	**VW3 AE 0416** *(2)* **VW3 AE 0424** *(3)*	0.200

(1) For any other configuration, please contact our Customer Care Centre.
(2) For 6-pulse mounting.
(3) For 12-pulse mounting.

Variable speed drives

Altivar 71 Plus

Floor-standing enclosure with separate air flows or compact version

Options dependent on the drive rating

Options dependent on the drive rating (continued) *(1)*

Three-phase supply voltage 500 V and 690 V 50/60 Hz (continued)

Description		For ATV 71 enclosure		Reference	Weight
		500 V	690 V		kg
Enclosure heater		EXC●D90N…C25N EXS5D90N…C25N	EXC●C11Y…C31Y EXS5C11Y…C31Y	**VW3 AE 0501**	0.500
		EXC●C31N…C50N EXS5C31N…C50N EXA●C50N…C80N	EXC●C40Y…C63Y EXS5C40Y…C63Y EXA●C63Y…M10Y	**VW3 AE 0502**	1.000
		EXA●C90N…M15N	EXA●M12Y…M20Y	**VW3 AE 0503**	1.500
Motor choke		EXC●D90N, C11N EXS5D90N, C11N	EXC●C11Y, C13Y EXS5C11Y, C13Y	**VW3 AE 0603**	17.000
		EXC●C13N, C16N EXS5C13N, C16N	EXC●C16Y, C20Y EXS5C16Y, C20Y	**VW3 AE 0604**	35.000
		EXC●C20N, C25N EXS5C20N, C25N	EXC●C25Y, C31Y EXS5C25Y, C31Y	**VW3 AE 0605**	64.000
		EXC2C31N, C40N	EXC2C40Y, C50Y	**VW3 AE 0626** *(2)*	192.000
		EXC5C31N, C40N	EXC5C40Y, C50Y	**VW3 AE 0628** *(2)*	192.000
		EXS5C31N, C40N	EXS5C40Y, C50Y	**VW3 AE 0630** *(2)*	197.000
		EXC2C50N	EXC2C63Y	**VW3 AE 0627** *(2)*	234.000
		EXC5C50N	EXC5C63Y	**VW3 AE 0629** *(2)*	234.000
		EXS5C50N	EXS5C63Y	**VW3 AE 0631** *(2)*	234.000
		EXA●C50N...C80N	EXA●C63Y...M10Y	**VW3 AE 0635**	132.000
		EXA●C90N...M15N	EXA●M12Y...M20Y	**VW3 AE 0636**	264.000
200 mm plinth	Without option	EXC●D90N…C13N	EXC●C11Y…C16Y	**VW3 AE 0801**	11.000
		EXC●C16N…C25N	EXC●C20Y…C31Y	**VW3 AE 0802**	13.000
		EXC●C31N…C50N	EXC●C40Y…C63Y	**VW3 AE 0804**	17.000
		EXA●C50N...C80N	EXA●C63Y…M10Y	**VW3 AE 0820** *(3)*	38.000
		EXA●C90N...M15N	EXA●M12Y…M20Y	**VW3 AE 0822**	69.000
	With motor choke	EXC●D90N…C16N	EXC●C11Y…C20Y	**VW3 AE 0801**	11.000
		EXC●C20N…C31N	EXC●C25Y…C45Y	**VW3 AE 0802**	13.000
		EXC●C31N…C50N	EXC●C40Y…C63Y	**VW3 AE 0806**	26.000
		EXA●C50N...C80N	EXA●C63Y…M10Y	**VW3 AE 0820** *(3)*	38.000
		EXA●C90N...M15N	EXA●M12Y…M20Y	**VW3 AE 0822**	69.000
	With line choke	EXA●C50N...C80N	EXA●C63Y…M10Y	**VW3 AE 0820** *(3)*	38.000
		EXA●C90N...M15N	EXA●M12Y...M20Y	**VW3 AE 0824**	78.000
Plinth for braking unit		EXC●C16N…C50N	EXC●C20Y…C63Y	**VW3 AE 0810**	9.000

(1) For any other configuration, please contact our Customer Care Centre.
(2) These options may lead to modification of the size of the enclosure. Please refer to the dimensions on our website www.schneider-electric.com.
*(3) If a line contactor and choke are used, order reference **VW3 AE 0821** (40.000 kg).*

Index

A

ATV 71E5075N4 19
ATV 71E5D11N4 19
ATV 71E5D15N4 19
ATV 71E5D18N4 19
ATV 71E5D22N4 19
ATV 71E5D30N4 19
ATV 71E5D37N4 19
ATV 71E5D45N4 19
ATV 71E5D55N4 19
ATV 71E5D75N4 19
ATV 71E5U15N4 19
ATV 71E5U22N4 19
ATV 71E5U30N4 19
ATV 71E5U40N4 19
ATV 71E5U55N4 19
ATV 71E5U75N4 19
ATV 71ES5C11N4 105
ATV 71ES5C13N4 105
ATV 71ES5C16N4 105
ATV 71ES5C20N4 105
ATV 71ES5C25N4 105
ATV 71ES5C28N4 105
ATV 71ES5C31N4 105
ATV 71ES5C40N4 105
ATV 71ES5C50N4 105
ATV 71ES5D90N4 105
ATV 71EXA●C50N 108
ATV 71EXA●C50N4 108
ATV 71EXA●C63N 108
ATV 71EXA●C63N4 108
ATV 71EXA●C63Y 109
ATV 71EXA●C71N4 108
ATV 71EXA●C80N 108
ATV 71EXA●C80Y 109
ATV 71EXA●C90N 108
ATV 71EXA●C90N4 108
ATV 71EXA●M10Y 109
ATV 71EXA●M11N 108
ATV 71EXA●M11N4 108
ATV 71EXA●M12Y 109
ATV 71EXA●M13N 108
ATV 71EXA●M13N4 108
ATV 71EXA●M15Y 109
ATV 71EXA●M18Y 109
ATV 71EXA●M20Y 109
ATV 71EXC2C11N 112
ATV 71EXC2C11N4 112
ATV 71EXC2C11Y 113
ATV 71EXC2C13N 112
ATV 71EXC2C13N4 112
ATV 71EXC2C13Y 113
ATV 71EXC2C16N 112
ATV 71EXC2C16N4 112
ATV 71EXC2C16Y 113
ATV 71EXC2C20N 112
ATV 71EXC2C20N4 112
ATV 71EXC2C20Y 113
ATV 71EXC2C25N 112
ATV 71EXC2C25N4 112
ATV 71EXC2C25Y 113
ATV 71EXC2C28N4 112
ATV 71EXC2C31N 112
ATV 71EXC2C31N4 112
ATV 71EXC2C31Y 113
ATV 71EXC2C40N 112
ATV 71EXC2C40N4 112
ATV 71EXC2C40Y 113
ATV 71EXC2C50N 112
ATV 71EXC2C50N4 112
ATV 71EXC2C50Y 113
ATV 71EXC2C63Y 113
ATV 71EXC2D90N 112
ATV 71EXC2D90N4 112
ATV 71EXC5C11N 112
ATV 71EXC5C11N4 112
ATV 71EXC5C11Y 113
ATV 71EXC5C13N 112
ATV 71EXC5C13N4 112
ATV 71EXC5C13Y 113
ATV 71EXC5C16N 112
ATV 71EXC5C16N4 112
ATV 71EXC5C16Y 113
ATV 71EXC5C20N 112
ATV 71EXC5C20N4 112
ATV 71EXC5C20Y 113
ATV 71EXC5C25N 112
ATV 71EXC5C25N4 112
ATV 71EXC5C25Y 113
ATV 71EXC5C28N4 112
ATV 71EXC5C31N 112
ATV 71EXC5C31N4 112
ATV 71EXC5C31Y 113
ATV 71EXC5C40N 112
ATV 71EXC5C40N4 112
ATV 71EXC5C40Y 113
ATV 71EXC5C50N 112
ATV 71EXC5C50N4 112
ATV 71EXC5C50Y 113
ATV 71EXC5C63Y 113
ATV 71EXC5D90N 112
ATV 71EXC5D90N4 112
ATV 71EXS5C11N 108
ATV 71EXS5C11N4 108
ATV 71EXS5C11Y 109
ATV 71EXS5C13N 108
ATV 71EXS5C13N4 108
ATV 71EXS5C13Y 109
ATV 71EXS5C16N 108
ATV 71EXS5C16N4 108
ATV 71EXS5C16Y 109
ATV 71EXS5C20N 108
ATV 71EXS5C20N4 108
ATV 71EXS5C20Y 109
ATV 71EXS5C25N 108
ATV 71EXS5C25N4 108
ATV 71EXS5C25Y 109
ATV 71EXS5C28N4 108
ATV 71EXS5C31N 108
ATV 71EXS5C31N4 108
ATV 71EXS5C31Y 109
ATV 71EXS5C40N 108
ATV 71EXS5C40N4 108
ATV 71EXS5C40Y 109
ATV 71EXS5C50N 108
ATV 71EXS5C50N4 108
ATV 71EXS5C50Y 109
ATV 71EXS5C63Y 109
ATV 71EXS5D90N 108
ATV 71EXS5D90N4 108
ATV 71H037M3 16
ATV 71H075M3 16
ATV 71H075N4 17
ATV 71HC11N4 17
ATV 71HC11Y 20 & 100
ATV 71HC13N4 17
ATV 71HC13Y 20 & 100
ATV 71HC16N4 17
ATV 71HC16Y 20 & 100
ATV 71HC20N4 17
ATV 71HC20Y 20 & 100
ATV 71HC25N4 17
ATV 71HC25Y 20, 100 & 101
ATV 71HC28N4 17
ATV 71HC31N4 17
ATV 71HC31Y 20, 100 & 101
ATV 71HC40N4 17
ATV 71HC40Y 20, 100, 101
ATV 71HC50N4 17
ATV 71HC50Y 20, 100, 101
ATV 71HC63Y 20, 100, 101
ATV 71HD11M3X 16
ATV 71HD11N4 17
ATV 71HD11Y 20 & 100
ATV 71HD15M3X 16
ATV 71HD15N4 17
ATV 71HD15Y 20 & 100
ATV 71HD18M3X 16
ATV 71HD18N4 17
ATV 71HD18Y 20 & 100
ATV 71HD22M3X 16
ATV 71HD22N4 17
ATV 71HD22Y 20 & 100
ATV 71HD30M3X 16
ATV 71HD30N4 17
ATV 71HD30Y 20 & 100
ATV 71HD37M3X 16
ATV 71HD37N4 17
ATV 71HD37Y 20 & 100
ATV 71HD45M3X 16
ATV 71HD45N4 17
ATV 71HD45Y 20 & 100
ATV 71HD55M3X 16
ATV 71HD55N4 17
ATV 71HD55Y 20 & 100
ATV 71HD75M3X 16
ATV 71HD75N4 17
ATV 71HD75Y 20 & 100
ATV 71HD90N4 17
ATV 71HD90Y 20 & 100
ATV 71HU15M3 16
ATV 71HU15N4 17
ATV 71HU15S6X 20
ATV 71HU22M3 16
ATV 71HU22N4 17
ATV 71HU22S6X 20
ATV 71HU22Y 20 & 100
ATV 71HU30M3 16
ATV 71HU30N4 17
ATV 71HU30S6X 20
ATV 71HU30Y 20 & 100
ATV 71HU40M3 16
ATV 71HU40N4 17
ATV 71HU40S6X 20
ATV 71HU40Y 20 & 100
ATV 71HU55M3 16
ATV 71HU55N4 17
ATV 71HU55S6X 20
ATV 71HU55Y 20 & 100
ATV 71HU75M3 16
ATV 71HU75N4 17
ATV 71HU75S6X 20
ATV 71HU75Y 20 & 100
ATV 71P075N4Z 18 & 99
ATV 71PD11N4Z 18 & 99
ATV 71PU15N4Z 18 & 99
ATV 71PU22N4Z 18 & 99
ATV 71PU30N4Z 18 & 99
ATV 71PU40N4Z 18 & 99
ATV 71PU55N4Z 18 & 99
ATV 71PU75N4Z 18 & 99
ATV 71QC11N4 18
ATV 71QC11Y 21
ATV 71QC13N4 18
ATV 71QC13Y 21
ATV 71QC16N4 18
ATV 71QC16Y 21
ATV 71QC20N4 18
ATV 71QC20Y 21
ATV 71QC25N4 18
ATV 71QC25Y 21
ATV 71QC31N4 18
ATV 71QC31Y 21
ATV 71QC40N4 18
ATV 71QC40Y 21
ATV 71QC50N4 18
ATV 71QC50Y 21
ATV 71QC63Y 21
ATV 71QD90N4 18
ATV 71W075N4 19 & 98
ATV 71WD11N4 19 & 98
ATV 71WD15N4 19 & 98
ATV 71WD18N4 19 & 98
ATV 71WD22N4 19 & 98
ATV 71WD30N4 19 & 98
ATV 71WD37N4 19 & 98
ATV 71WD45N4 19 & 98
ATV 71WD55N4 19 & 98
ATV 71WD75N4 19 & 98
ATV 71WU15N4 19 & 98
ATV 71WU22N4 19 & 98
ATV 71WU30N4 19 & 98
ATV 71WU40N4 19 & 98
ATV 71WU55N4 19 & 98
ATV 71WU75N4 19 & 98

L

LU9 GC3 33 & 61
LUF P1 63

T

TCS CTN023F13M03 60
TCSM CNAM 3M002P 38
TCSW AAC13FB 38
TSC CTN026M16M 60
TSX CAN CA 100 57 & 60
TSX CAN CA 300 57 & 60
TSX CAN CA 50 57 & 60
TSX CAN CB 100 57 & 60
TSX CAN CB 300 57 & 60
TSX CAN CB 50 57 & 60
TSX CAN CD 100 57 & 60
TSX CAN CD 30 57
TSX CAN CD 300 57 & 60
TSX CAN CD 50 60
TSX CAN KCDF 180T 57
TSX PBS CA100 63
TSX PBS CA400 63
TSX SCA 62 62

V

VW3 A1 101 32
VW3 A1 104 R10 33
VW3 A1 104 R100 33
VW3 A1 104 R30 33
VW3 A1 104 R50 33
VW3 A1 105 32
VW3 A3 101 25
VW3 A3E 101 114
VW3 A3E 201 114
VW3 A3E 202 114
VW3 A3E 303 114
VW3 A3E 304 114
VW3 A3E 307 114
VW3 A3E 307S371 114
VW3 A3E 309 114
VW3 A3E 310D 114
VW3 A3E 317 114
VW3 A3E 326 114
VW3 A3E 401 114
VW3 A3E 402 114
VW3 A3E 403 114
VW3 A3E 404 114
VW3 A3E 405 114
VW3 A3E 406 114
VW3 A3E 407 114
VW3 A3E 408 114
VW3 A3E 409 114
VW3 A3E 411 114
VW3 A3E 501 114
VW3 A4 401 85
VW3 A4 402 85
VW3 A4 403 85
VW3 A4 404 85
VW3 A4 405 85
VW3 A4 406 85
VW3 A4 407 85
VW3 A4 408 85
VW3 A4 410 85
VW3 A4 501 77
VW3 A4 502 77
VW3 A4 503 77
VW3 A4 504 77
VW3 A4 505 77
VW3 A4 506 77
VW3 A4 507 77
VW3 A4 508 77
VW3 A4 509 77
VW3 A4 510 77
VW3 A4 511 77
VW3 A4 512 77
VW3 A4 551 79 & 80
VW3 A4 552 79 & 80
VW3 A4 553 79 & 80
VW3 A4 554 79 & 80
VW3 A4 555 79 & 80
VW3 A4 556 79 & 80
VW3 A4 557 79
VW3 A4 558 79
VW3 A4 559 79 & 80
VW3 A4 560 79 & 80
VW3 A4 561 79 & 80
VW3 A4 562 79
VW3 A4 563 79 & 80
VW3 A4 564 79 & 80
VW3 A4 565 79
VW3 A4 568 80
VW3 A4 569 79 & 80
VW3 A4 570 80
VW3 A4 571 80
VW3 A4 572 80
VW3 A4 573 80
VW3 A5 102 89
VW3 A5 103 89
VW3 A5 104 89
VW3 A5 105 88
VW3 A5 201 91
VW3 A5 202 91
VW3 A5 203 91
VW3 A5 204 91
VW3 A5 205 91
VW3 A5 206 91
VW3 A5 207 91
VW3 A5 208 91
VW3 A5 209 91
VW3 A5 210 91
VW3 A5 211 91
VW3 A58501 79
VW3 A58502 79
VW3 A7 101 64
VW3 A7 102 64
VW3 A7 103 64
VW3 A7 104 64
VW3 A7 201 71
VW3 A7 202 71
VW3 A7 203 71
VW3 A7 204 71
VW3 A7 205 71
VW3 A7 206 71
VW3 A7 207 71
VW3 A7 208 71
VW3 A7 209 71
VW3 A7 210 71

Index

VW3 A7 211 *71*
VW3 A7 212 *71*
VW3 A7 701 *65, 66 & 67*
VW3 A7 702 *65, 66 & 67*
VW3 A7 703 *65, 66 & 67*
VW3 A7 704 *65, 66 & 67*
VW3 A7 705 *65, 66 & 67*
VW3 A7 706 *65*
VW3 A7 707 *65, 66 & 67*
VW3 A7 708 *65*
VW3 A7 709 *65*
VW3 A7 710 *66*
VW3 A7 711 *66*
VW3 A7 712 *66*
VW3 A7 713 *65*
VW3 A7 715 *66*
VW3 A7 716 *66*
VW3 A7 717 *66*
VW3 A7 718 *66*
VW3 A7 801 *68 & 69*
VW3 A7 802 *68 & 69*
VW3 A7 803 *68 & 69*
VW3 A7 804 *68 & 69*
VW3 A7 805 *68 & 69*
VW3 A7 806 *68 & 69*
VW3 A7 807 *68*
VW3 A7 808 *68*
VW3 A7 809 *68*
VW3 A7 810 *68*
VW3 A7 811 *69*
VW3 A7 812 *69*
VW3 A7 813 *69*
VW3 A7 814 *69*
VW3 A7 815 *69*
VW3 A7 816 *69*
VW3 A7 817 *69*
VW3 A7E 101 *116*
VW3 A7E 102 *116*
VW3 A7E 103 *120*
VW3 A7E 104 *120*
VW3 A8 106 *57*
VW3 A8 115 *38*
VW3 A8 306 R03 *33*
VW3 A8 306 R10 *33*
VW3 A8 306 R30 *33*
VW3 A8 306 TF03 *33*
VW3 A8 306 TF10 *33*
VW3 A9 101 *29*
VW3 A9 102 *29*
VW3 A9 103 *29*
VW3 A9 104 *29*
VW3 A9 105 *29*
VW3 A9 106 *29*
VW3 A9 107 *29*
VW3 A9 108 *29*
VW3 A9 109 *29*
VW3 A9 110 *29*
VW3 A9 111 *29*
VW3 A9 112 *29*
VW3 A9 113 *29*
VW3 A9 114 *29*
VW3 A9 115 *29*
VW3 A9 116 *29*
VW3 A9 117 *29*
VW3 A9 201 *28*
VW3 A9 202 *28*
VW3 A9 203 *28*
VW3 A9 204 *28*
VW3 A9 205 *28*
VW3 A9 206 *28*
VW3 A9 207 *28*
VW3 A9 208 *28*
VW3 A9 209 *28*
VW3 A9 210 *28*
VW3 A9 211 *28*
VW3 A9 212 *28*
VW3 A9 213 *28*
VW3 A9 214 *28*
VW3 A9 217 *28*
VW3 A9 301 *30*
VW3 A9 302 *30*
VW3 A9 303 *30*
VW3 A9 304 *30*
VW3 A9 305 *30*
VW3 A9 306 *30*
VW3 A9 307 *30*
VW3 A9 308 *30*
VW3 A9 309 *30 & 31*
VW3 A9 310 *30 & 31*
VW3 A9 312 *30 & 31*
VW3 A9 314 *30*
VW3 A9 407 *25*
VW3 A9 501 *26*
VW3 A9 502 *26*
VW3 A9 503 *26*
VW3 A9 504 *26*
VW3 A9 505 *26*
VW3 A9 506 *26*
VW3 A9 507 *26*
VW3 A9 508 *26*
VW3 A9 509 *26*
VW3 A9 510 *26*
VW3 A9 511 *26*
VW3 A9 512 *26*
VW3 A9 513 *26*
VW3 A9 514 *26*
VW3 A9 515 *26*
VW3 A9 541 *103*
VW3 A9 542 *103*
VW3 A9 543 *103*
VW3 A9 544 *103*
VW3 A9 545 *103*
VW3 A9 546 *103*
VW3 A9 547 *103*
VW3 A9 548 *103*
VW3 A9 549 *103*
VW3 A9 550 *103*
VW3 A9 551 *103*
VW3 A9 612 *89*
VW3 A9 613 *89*
VW3 A9 621 *23*
VW3 A9 622 *23*
VW3 A9 623 *23*
VW3 A9 624 *23*
VW3 A9 625 *23*
VW3 A9 626 *23*
VW3 A9 627 *23*
VW3 A9 628 *23*
VW3 A9 629 *24*
VW3 A9 631 *24*
VW3 A9 633 *24*
VW3 A9 635 *24*
VW3 A9 637 *24*
VW3 A9 638 *24*
VW3 A9 639 *24*
VW3 A9 640 *24*
VW3 A9 641 *24*
VW3 A9 642 *23*
VW3 A9 644 *24*
VW3 A9 645 *24*
VW3 A9 646 *24*
VW3 A9 647 *24*
VW3 A9 648 *24*
VW3 A9 649 *24*
VW3 A9 801 *27*
VW3 A9 802 *27*
VW3 A9 803 *27*
VW3 AE 0103 *116 & 120*
VW3 AE 0104 *116 & 120*
VW3 AE 0105 *116 & 120*
VW3 AE 0106 *116*
VW3 AE 0107 *116*
VW3 AE 0109 *116*
VW3 AE 0111 *116*
VW3 AE 0112 *116*
VW3 AE 0113 *116*
VW3 AE 0114 *116 & 121*
VW3 AE 0115 *116 & 121*
VW3 AE 0116 *116 & 121*
VW3 AE 0141 *120*
VW3 AE 0142 *120*
VW3 AE 0143 *120*
VW3 AE 0144 *120*
VW3 AE 0145 *120*
VW3 AE 0146 *120*
VW3 AE 0147 *120*
VW3 AE 0150 *120*
VW3 AE 0151 *120*
VW3 AE 0166 *116*
VW3 AE 0167 *116*
VW3 AE 0168 *116*
VW3 AE 0169 *120*
VW3 AE 0170 *120*
VW3 AE 0171 *120*
VW3 AE 0172 *120*
VW3 AE 0173 *120*
VW3 AE 0174 *116*
VW3 AE 0175 *120*
VW3 AE 0205 *121*
VW3 AE 0206 *116 & 121*
VW3 AE 0208 *121*
VW3 AE 0209 *116 & 121*
VW3 AE 0210 *116 & 121*
VW3 AE 0212 *116 & 121*
VW3 AE 0213 *116 & 121*
VW3 AE 0215 *116*
VW3 AE 0216 *116*
VW3 AE 0218 *116 & 121*
VW3 AE 0219 *121*
VW3 AE 0221 *121*
VW3 AE 0224 *116*
VW3 AE 0226 *121*
VW3 AE 0227 *116 & 121*
VW3 AE 0302 *117*
VW3 AE 0303 *117*
VW3 AE 0404 *122*
VW3 AE 0406 *117 & 122*
VW3 AE 0409 *117 & 122*
VW3 AE 0411 *117 & 122*
VW3 AE 0413 *117 & 122*
VW3 AE 0414 *117 & 122*
VW3 AE 0415 *117 & 122*
VW3 AE 0416 *117 & 122*
VW3 AE 0421 *117 & 122*
VW3 AE 0423 *117 & 122*
VW3 AE 0424 *117 & 122*
VW3 AE 0426 *117 & 122*
VW3 AE 0427 *117 & 122*
VW3 AE 0428 *122*
VW3 AE 0429 *117 & 122*
VW3 AE 0501 *117 & 123*
VW3 AE 0502 *117 & 123*
VW3 AE 0503 *117 & 123*
VW3 AE 0603 *118 & 123*
VW3 AE 0604 *118 & 123*
VW3 AE 0605 *118 & 123*
VW3 AE 0606 *118*
VW3 AE 0607 *118*
VW3 AE 0609 *118*
VW3 AE 0610 *118*
VW3 AE 0613 *118*
VW3 AE 0614 *118*
VW3 AE 0615 *118*
VW3 AE 0617 *118*
VW3 AE 0619 *118*
VW3 AE 0620 *118*
VW3 AE 0621 *118*
VW3 AE 0622 *118*
VW3 AE 0624 *118*
VW3 AE 0625 *118*
VW3 AE 0626 *123*
VW3 AE 0627 *123*
VW3 AE 0628 *123*
VW3 AE 0629 *123*
VW3 AE 0630 *123*
VW3 AE 0631 *123*
VW3 AE 0635 *118 & 123*
VW3 AE 0636 *118 & 123*
VW3 AE 0641 *118*
VW3 AE 0642 *118*
VW3 AE 0644 *118*
VW3 AE 0645 *118*
VW3 AE 0647 *118*
VW3 AE 0648 *118*
VW3 AE 0649 *118*
VW3 AE 0651 *118*
VW3 AE 0652 *118*
VW3 AE 0653 *118*
VW3 AE 0654 *118*
VW3 AE 0656 *118*
VW3 AE 0657 *118*
VW3 AE 0659 *118*
VW3 AE 0660 *118*
VW3 AE 0661 *118*
VW3 AE 0663 *118*
VW3 AE 0664 *118*
VW3 AE 0665 *118*
VW3 AE 0666 *118*
VW3 AE 0668 *118*
VW3 AE 0669 *118*
VW3 AE 0671 *118*
VW3 AE 0672 *118*
VW3 AE 0673 *118*
VW3 AE 0675 *118*
VW3 AE 0676 *118*
VW3 AE 0801 *119 & 123*
VW3 AE 0802 *119 & 123*
VW3 AE 0803 *119*
VW3 AE 0804 *119 & 123*
VW3 AE 0805 *119*
VW3 AE 0806 *119 & 123*
VW3 AE 0810 *119 & 123*
VW3 AE 0816 *119*
VW3 AE 0817 *119*
VW3 AE 0820 *119 & 123*
VW3 AE 0822 *119 & 123*
VW3 AE 0824 *119 & 123*
VW3 AE 1003 *116*
VW3 AE 1004 *120*
VW3 AE 1005 *120*
VW3 AE 1201 *115*
VW3 AE 1202 *115*
VW3 AE 1301 *115*
VW3 AE 1401 *115*
VW3 AE 1402 *115*
VW3 AE 1501 *115*
VW3 AE 1502 *115*
VW3 AE 1503 *115*
VW3 AE 1601 *115*
VW3 AE 1801 *115*
VW3 AE 1901 *115*
VW3 AE 1902 *115*
VW3 AE 2001 *115*
VW3 AE 2002 *115*
VW3 AE 2003 *115*
VW3 AE 2004 *115*
VW3 AE 2005 *115*
VW3 AE 2101 *115*
VW3 AE 2102 *115*
VW3 AE 2201 *115*
VW3 AE 2301 *115*
VW3 AE 2302 *115*
VW3 AE 2303 *115*
VW3 AE 2414 *121*
VW3 AE 2415 *117 & 121*
VW3 AE 2416 *117 & 121*
VW3 AE 2417 *117 & 121*
VW3 AE 2418 *117 & 121*
VW3 AE 2419 *117 & 121*
VW3 AE 2420 *117 & 121*
VW3 AE 2501 *117*
VW3 AE 2502 *117*
VW3 AE 2503 *117*
VW3 AE 2504 *122*
VW3 AE 2505 *122*
VW3 AE 2506 *122*
VW3 AE 2507 *122*
VW3 AE 2508 *122*
VW3 AE 2509 *122*
VW3 AE 2601 *115*
VW3 AE 2701 *115*
VW3 A1 102 *32*
VW3 A1 103 *32*
VW3 A1 104 R10 *32*
VW3 A1 104 R100 *32*
VW3 A1 104 R30 *32*
VW3 A1 104 R50 *32*
VW3 A1 102 *33*
VW3 A3 201 *53*
VW3 A3 202 *53*
VW3 A3 303 *62*
VW3 A3 304 *62*
VW3 A3 307 *63*
VW3 A3 307S371 *63*
VW3 A3 309 *62*
VW3 A3 310D *62*
VW3 A3 316 *62*
VW3 A3 317 *62*
VW3 A3 326 *63*
VW3 A3 401 *52*
VW3 A3 402 *52*
VW3 A3 403 *52*
VW3 A3 404 *52*
VW3 A3 405 *52*
VW3 A3 406 *52*
VW3 A3 407 *52*
VW3 A3 408 *52*
VW3 A3 409 *52*
VW3 A3 411 *52*
VW3 A3 501 *57*
VW3 A4 411 *85*
VW3 A4 412 *85*
VW3 A4 413 *85*
VW3 A4 601 *82*
VW3 A4 602 *82*
VW3 A4 603 *82*
VW3 A4 604 *82*
VW3 A4 605 *82*
VW3 A4 606 *82*
VW3 A4 607 *82*
VW3 A4 608 *82*
VW3 A4 609 *82*
VW3 A4 610 *82*
VW3 A4 611 *82*
VW3 A4 612 *82*
VW3 A4 613 *82*
VW3 A4 619 *82*
VW3 A4 621 *83*
VW3 A4 622 *83*

Index

V ...	
VW3 A4 623	*83*
VW3 A4 624	*83*
VW3 A4 625	*83*
VW3 A4 626	*83*
VW3 A4 627	*83*
VW3 A4 628	*83*
VW3 A4 629	*83*
VW3 A4 630	*83*
VW3 A4 631	*83*
VW3 A4 632	*83*
VW3 A4 633	*83*
VW3 A4 639	*83*
VW3 A5 101	*88*
VW3 A5 101	*88 & 89*
VW3 A5 102	*88 & 89*
VW3 A5 103	*88 & 89*
VW3 A5 104	*88 & 89*
VW3 A5 105	*88 & 89*
VW3 A5 106	*88 & 89*
VW3 A5 107	*88 & 89*
VW3 A5 108	*88 & 89*
VW3 A7 716	*67*
VW3 A7 717	*67*
VW3 A7 718	*67*
VW3 A7 805	*67*
VW3 A7 806	*67*
VW3 A7 814	*67*
VW3 A8 120	*35*
VW3 A8 121	*35*
VW3 A8 306 2	*62*
VW3 A8 306 R	*61*
VW3 A8 306 R03	*61*
VW3 A8 306 R10	*61 & 63*
VW3 A8 306 R30	*61 & 63*
VW3 A8 306 RC	*33 & 61*
VW3 A8 306 TF03	*61*
VW3 A8 306 TF10	*61*
VW3 A9 404	*25*
VW3 A9 405	*25*
VW3 A9 406	*25*
VW3 A9 643	*23*
VW3 CAN A71	*60*
VW3 CAN CARR03	*60*
VW3 CAN CARR1	*60*
VW3 CAN KCDF 180T	*60*
VZ3 V1 203	*27*
VZ3 V1 204	*27*
VZ3 V1 209	*27*
VZ3 V1 210	*27*