Modicon® M340™ automation platform
Analog I/O modules

Applications		Analog inputs	
			
Type of I/O		Isolated low-level voltage inputs, resistors, thermocouples and temperature probes	
Type		Multi-range	
Range	**Voltage**	± 40 mV, ± 80 mV, ± 160 mV, ± 320 mV, ± 640 mV and ± 1.28 V	
	Current	–	
	Thermocouple, Temperature probe, Resistor	Thermocouples type B, E, J, K, L, N, R, S, T, U Temperature probes type Pt 100, Pt 1000, Ni 100, Ni 1000 and Cu 10, 2-,3- or 4-wire Resistors 2-, 3- or 4-wire, 400 Ω or 4,000 Ω	
Modularity		4 channels	8 channels
Acquisition period		400 ms for 4 channels	400 ms for 8 channels
Conversion time		–	
Resolution		16 bits	
Isolation		Between channels: 750 V ⎓ Between channels and bus: 1,400 V ⎓ Between channels and ground: 750 V ⎓	
Connection	**Directly to the module**	Via 40-way connector	Via two 40-way connectors
	Via preformed cordsets	BMX FCW ●01S cordsets with one end with color-coded flying leads (3 or 5 m long)	
Module		**BMX ART 0414**	**BMX ART 0814**
Page		2/31	

			
Compatibility with Modicon® Telefast® ABE 7 pre-wired system		Sub-base with 4 channels for direct connection of 4 thermocouples plus connection and provision of cold-junction compensation	
Type of module	**Connection sub-base**	**ABE 7CPA412**	
	Preformed cordsets (length 1.5, 3 or 5 m)	**BMX FCA●●2**	
Pages		5/11 and 2/31	

Analog inputs	Analog outputs	Mixed analog I/O	
			
Isolated high-level inputs	Isolated high-level outputs	Non-isolated high-level inputs	Non-isolated high-level outputs
Voltage/current	Voltage/current	Voltage/current	
± 10 V, 0...10 V, 0...5 V, 1...5 V, ± 5 V	± 10 V	± 10 V, 0...10 V, 0...5 V, 1...5 V	± 10 V
0...20 mA, 4...20 mA, ± 20 mA	0...20 mA, 4...20 mA	0...20 mA, 4...20 mA	0...20 mA, 4...20 mA
–	–	–	–
4 channels	2 channels	4 channels	2 channels
Fast: 1 + (1 x no. of declared channels) ms By default, 5 ms for 4 channels	–	Fast: 1 + (1 x no. of declared channels) ms By default, 5 ms for 4 channels	–
–	≤ 1 ms	–	≤ 1 ms
16 bits	16 bits	14…12 bits in U range 12 bits in I range	12 bits in U range 11 bits in I range
Between channels: 300 V ⎓ Between channels and bus: 1,400 V ⎓ Between channels and ground: 1,400 V ⎓	Between channels: 750 V ⎓ Between channels and bus: 1,400 V ⎓ Between channels and ground: 1,400 V ⎓	Between group of input channels and group of output channels: 750 V ⎓ Between channels and bus: 1,400 V ⎓ Between channels and ground: 1,400 V ⎓	
Via 20-way removable terminals (screw or spring-type)			
BMX FTW ●01S cordsets with one end with color-coded flying leads (3 or 5 m long)			
BMX AMI 0410	**BMX AMO 0210**	**BMX AMM 0600**	
2/31			
			
4-channel sub-base for direct connection of 4 inputs, delivers and distributes 4 protected isolated power supplies	4-channel sub-base (only 2-channel used) for direct connection of 2 outputs	–	
ABE 7CPA410	**ABE 7CPA21**		
BMX FCA●●0	**BMX FCA●●0**		
5/11 and 2/31		–	

Modicon® M340™ automation platform
Analog I/O modules

Introduction

The analog I/O module offer consists of:
- Three isolated analog input modules:
  - 4 analog high-speed channels (16 bits), voltage or current, **BMX AMI 0410**
  - 4 and 8 analog channels (15 bits + sign) for thermocouples, Pt, Ni or Cu temperature probes, **BMX ART 0414/0814**
- One analog output module with 2 voltage/current channels, **BMX AMO 0210**
- One mixed module (12 bits) with 4 analog input channels and 2 analog output channels, non-isolated, voltage or current, **BMX AMM 0600**

Analog I/O modules are equipped with a connector for a 20-way removable terminal block, except for **BMX ART 0414/0814** analog input modules with thermocouples/temperature probes that are equipped with a 40-way connector.

All analog modules occupy a single slot in the **BMX XBP ●●●** racks. These modules can be installed in any slot in the rack, except for the first two (PS and 00) which are reserved for the power supply module in the **BMX CPS ●●0** rack and the **BMX P34 ●●0** processor module respectively.
The power supply for the analog functions is supplied by the backplane bus (3.3 V and 24 V). Analog I/O modules are hot-swappable (see page 2/8).

In a Modicon M340 single-rack configuration, the maximum number of analog channels is limited by the number of slots available in the rack (11 slots maximum).

Description

BMX AM●/ART analog I/O modules are standard format (1 slot). They have a case that helps to ensure IP 20 protection of the electronics, and are locked into position by a captive screw.

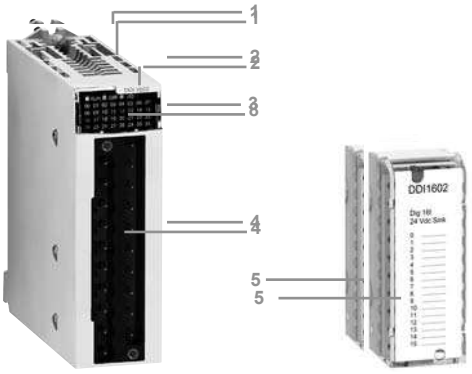

Module and 20-way removable terminal block

I/O modules connected via 20-way removable terminal block

1 Rigid body providing support and protection for the electronic card
2 Module reference marking (a label is also visible on the right-hand side of the module)
3 Channel status display block
4 Connector taking the 20-way removable terminal block for connecting sensors or preactuators

To be ordered separately:
5 A **BMX FTB 20●0** 20-way removable terminal block (label supplied with each I/O module) or a preformed cordset with a 20-way removable terminal block at one end and flying leads at the other (see page 2/30).

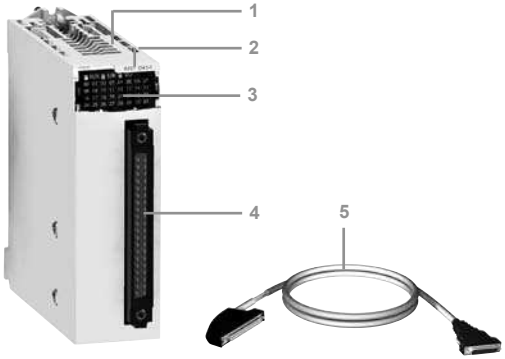

I/O modules connected via 40-way connector

1 Rigid body providing support and protection for the electronic card
2 Module reference marking (a label is also visible on the right-hand side of the module)
3 Channel status display block
4 One or two 40-way connectors (32 or 64 channels) *(1)* for connecting sensors or preactuators
5 With the 64-channel module, successive actuations of a pushbutton cause the display of the states of channels 0 ... 31 or 32 ... 64 on the block 3 (see page 2/31)

To be ordered separately, depending on the type of module:
One or two preformed cordset(s) with a 40-way connector (see page 2/30).

Modicon® M340™ automation platform
Analog I/O modules

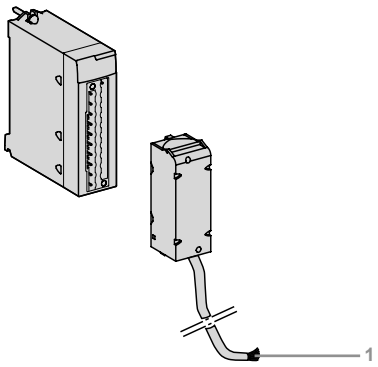

BMX FTW ●01S cordset
(with 20-way removable terminal block at one end and flying leads at the other)

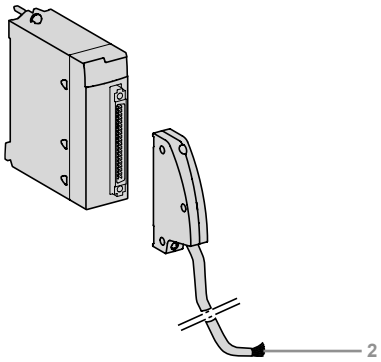

BMX FCW ●01S cordset
(with 40-way connector at one end and flying leads at the other)

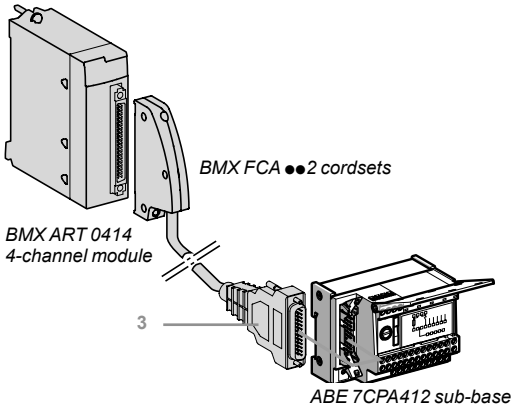

ABE 7CPA412 sub-base

Connecting modules with removable terminal blocks

BMX AMI 0410/AMO 0210/AMM 0600 modules with 20-way terminal block

These 20-way removable terminal blocks are the same as those used for discrete I/O modules (screw clamp, cage clamp or spring-type). See page 2/7.

One version of the removable terminal block is equipped with a 3 or 5 m long cordset with color-coded flying leads (**BMX FTW●●S**). These preformed cordsets, with reinforced shielding have, at the other end 1, color-coded flying leads.

Connecting modules with 40-way connectors

BMX ART 0●14 modules with 40-way connectors

Two types of cordset are available:
- Preformed cordsets with reinforced shielding (**BMX FCW ●01S**) have color-coded flying leads 2. They are available in 3 or 5 m lengths, and provide easy direct wire-to-wire connection of the analog sensors via terminal blocks.
- Preformed cordsets with reinforced shielding (**BMX FCA ●02**) that also have a 25-way SUB-D connector 3. They are available in 1.5, 3 or 5 m lengths, and provide direct connection to the Modicon® Telefast® **ABE 7CPA412** sub-base (see below).

Use with Modicon Telefast ABE 7 sub-bases

Using the Modicon Telefast ABE 7 pre-wired system makes it easier to install the modules since the inputs (or outputs) can be accessed using screw terminals. Two special sub-bases are available:

Modicon Telefast ABE 7CPA410 sub-base

The Modicon Telefast **ABE 7CPA410** sub-base is mainly used in conjunction with the **BMX AMI 0410** voltage/current analog 4-input module. It is used to:
- Connect the four sensors directly
- Remotely locate the input terminals in voltage mode
- Power the 4...20 mA conditioners one channel at a time with a 24 V voltage, protected and limited to 25 mA, while maintaining isolation between channels
- Protect the current impedance matching resistors integrated in the sub-base against overvoltages

Connection is via the **BMX FCA ●●0** cordset (1.5, 3 or 5 m long).

Modicon Telefast ABE 7CPA412 sub-base

The Modicon Telefast **ABE 7CPA412** sub-base is specially designed as a wiring interface for the **BMX ART 0414** and **BMX ART 0814** thermocouple modules. It is used to:
- Connect the four thermocouple probes
- Provide external cold-junction compensation with a temperature probe integrated in the sub-base
- Help ensure continuity of the shielding

The **BMX ART 0814** module requires two Modicon Telefast **ABE 7CPA412** sub-bases. The connection with each sub-base is made via a **BMX FCA ●●2** cordset 3 (1.5, 3 or 5 m long).

Modicon Telefast ABE 7CPA21 sub-base

The Modicon Telefast **ABE 7CPA21** sub-base is compatible with the **BMX AMO** and **BMX ART 0210** voltage/current analog 2-output module. It is used to:
- Connect the two channels
- Help ensure continuity of the shielding

Connection is via the **BMX FCA ●●0** cordset (1.5, 3 or 5 m long).

Modicon® M340™ automation platform
Analog I/O modules

BMX AMI 0410 analog input modules

The **BMX AMI 0410** module is a high-level analog input module with 4 isolated inputs (16 bits).
Used with sensors or transmitters, it performs monitoring, measurement and process control functions for continuous processes.
For each input, the **BMX AMI 0410** module offers the following ranges:
□ Voltage ± 10 V, ± 5 V, 0…10 V, 0…5 V and 1…5 V
□ Current 0...20 mA, 4…20 mA and ± 20 mA, depending on the choice made during configuration
The module operates with voltage inputs. It includes four reading resistors connected to the terminal block to form the current inputs.

Functions

The **BMX AMI 0410** module includes the following functions:
■ Adaptation and multiplexing:
□ Physical connection to the process
□ Protection of the module against overvoltages
□ Protection of the current reading resistors
□ Adaptation of input signals by analog filtering
□ Scanning of input channels by solid state multiplexing, by optical commutator switches
■ Adaptation to input signals: Gain selection, drift compensation
■ Conversion: 24-bit analog/digital converter
■ Conversion of input measurements to a unit that is suitable for the user:
□ Taking account of the alignment coefficients to be applied to measurements, as well as the module autocalibration coefficients
□ Measurement filtering, depending on the configuration parameters
□ Measurement scaling, depending on the configuration parameters
■ Interface and communication with the application:
□ Receipt of the configuration parameters for the module and its channels
□ Transmission of measured values to the application, as well as module status
■ Module power supply
■ Module monitoring and indication of any detected faults to the application:
□ Conversion circuit test
□ Channel range overshoot test and watchdog test.

BMX ART 0414/0814 analog input modules

BMX ART 0414/0814 modules are multirange input modules with 4 or 8 low-level isolated inputs (15 bits + sign) respectively.
Depending on the choice made during configuration, the modules offer for each of the inputs the following range:
■ Temperature probe: Pt100, Pt1000, Cu10, Ni100 or Ni1000, with open-circuit detection
■ Thermocouple: B, E, J, K, L, N, R, S, T or U, with broken wire detection
■ Resistor: 0...400 or 0...4000 Ω, 2-, 3- or 4-wire
■ Voltage: ± 40 mV, ± 80 mV, ± 160 mV, ± 320 mV, ± 640 mV, ± 1.28 V.

Functions

BMX ART 0414/0814 modules offer the following functions
■ Adaptation and current source per channel:
□ Accepting an overload of ± 7.5 V
□ Autocalibration of the analog module offset as close as possible to the input terminal
□ Selection of the cold-junction compensation sensor included in the Modicon® Telefast® **ABE 7CPA412** sub-base or externally by the Pt 100 probe
■ Adaptation to input signals: Based on a low offset amplifier internal to the A/D converter
■ Conversion: 16-bit converter
■ Conversion of input measurements to a unit that is suitable for the user:
□ Taking account of the alignment coefficients to be applied to measurements, as well as the module autocalibration coefficients
□ Measurement filtering, depending on the configuration parameters
□ Measurement scaling, depending on the configuration parameters
■ Interface and communication with the application:
□ Receipt of the configuration parameters for the module and its channels
□ Transmission of measured values to the application, as well as module status
■ Module monitoring and indication of any detected faults to the application:
□ Conversion circuit test
□ Channel range overshoot test and watchdog test.

BMX AMO 0210 analog output module

The **BMX AMO 0210** module is a module with 2 high-level isolated outputs (15 bits + sign). It offers, for each of them, the ranges:
- Voltage: ± 10 V
- Current: 0...20 mA and 4...20 mA

The range is selected during configuration.

Functions

The **BMX AMO 210** module includes the following functions:
- Physical connection to the process
- Protection of the module against overvoltages
- Adaptation of the output signals:
  - Voltage or current adaptation by software configuration
  - Protection of the outputs against short-circuits and overloads
- Conversion to 15 bits with sign with redefinition of data
- Conversion of application values into data that can be used by the digital/analog converter:
  - Use of factory calibration parameters
- Interface and communication with the application:
  - Managing exchanges with the processor
  - Geographical addressing
  - Receipt of the configuration parameters for the module and its channels
  - Transmission of module status to the application
- Module monitoring and indication of any detected faults to the application:
  - Output power supply test
  - Channel range overshoot test
  - Detected output fault test
  - Watchdog test.

BMX AMM 0600 mixed analog I/O module

The **BMX AMM 0600** mixed module is a module with 4 inputs 14/12 bits and 2 outputs 12 bits non-isolated between one another. It offers, for each of them, the ranges:
- Voltage: ± 10 V, 0...10 V, 0...5 V and 1...5 V
- Current: 0...20 mA and 4...20 mA.

Functions

The **BMX AMM 0600** module has the following functions:
- Protection of the module against overvoltages
- Adaptation to the different actuators: voltage or current output
- Conversion of digital signals (11 bits or 12 bits depending on the range) to analog signals
- Conversion of application data into data that can be used by the digital/analog converter
- Module monitoring and detected fault indication to the application: Converter test, range overshoot test, watchdog test.

Modicon® M340™ automation platform
Analog I/O modules

Specifications of BMX AMI 0410 analog input modules

Input module			BMX AMI 0410							
Input type			Isolated high-level inputs							
Number of channels			4							
Nature of inputs	Voltage		± 10 V, 0…10 V, 0…5 V, 1…5 V, ± 5 V							
	Current		0...20 mA, 4…20 mA, ± 20 mA (via protected internal 250 Ω resistors)							
Analog/digital conversion			Σ Δ 24 bits							
Voltage/current range			± 10 V	± 5 V	0…5 V	0…10 V	1…5 V	0…20 mA	4…20 mA	± 20 mA
Maximum conversion value			± 11.4 V					± 30 mA		
Resolution			0.35 mV					0.92 µA		
Input impedance	Typical	**MΩ**	10 (regardless of the input level)							
Permitted overload on the inputs	Voltage range	**V**	± 30 ⎓							
	Current range	**mA**	± 90 ot short-circuit to + 24 V ⎓							
Voltage/current internal conversion resistor		Ω	–					250		
Precision of internal conversion resistor			–					0.1% - 15 ppm/°C		
Filtering			1st order digital filtering							
Read cycle time	Fast	**ms**	1 + 1 x no. of channels used (periodic reading of no. of declared channels)							
	Default	**ms**	5 for 4 channels (periodic reading of each channel)							
Measurement tolerance *(1)*	At 25°C	%FS	0.075%					0.15% *(2)*		
	Maximum at 0…60°C	%FS	0.1%					0.3% *(2)*		
Temperature drift			15 ppm/°C					30 ppm/°C		
Recalibration			Internal							
Common mode between channels		**dB**	120							
Digital value format			± 10,000 by default, ± 32,000 in user scale							
Isolation	Between channels	**V**	± 300 ⎓							
	Between channels and bus	**V**	1,400 ⎓							
	Between channels and ground	**V**	1,400 ⎓							
Consumption	Typical	**mA**	See Power consumption table on page 6/13							

Specifications of BMX ART 0414/0814 analog input modules

Input module			BMX ART 0414	BMX ART 0814
Input type			Isolated inputs, low-level voltage, resistors, temperature probes, thermocouples	
Number of channels			4	8
Nature of inputs			± 40 mV; ± 80 mV; ± 160 mV; ± 320 mV; ± 640 mV; ± 1.28 V	
Analog/digital conversion			Σ Δ 16 bits	
Resolution		**mV**	15 + sign	
Filtering			1st order digital filtering	
Read cycle time		**ms**	400 with temperature probes (1...4) 200 with thermocouples (1...4)	400 with temperature probes (1...8) 200 with thermocouples (1...8)
Permitted overload on the inputs		**V**	± 7.5 ⎓	
50/60 Hz rejection	**Differential mode** Typical	**dB**	60	
	Common mode Typical	**dB**	120	
Cold junction compensation	External compensation by Pt100 probe using		- the dedicated Modicon® Telefast® ABE 7CPA412 sub-base including the probe - a Pt 100 temperature probe 2-wire on channel 0 and/or 4 (thermocouple channel maintened) - a Pt 100 temperature probe 3-wired on channel 0 and/or 4 (thermocouple channel non maintened)	
Recalibration			Internal	
Isolation	Between channels	**V**	750 ⎓	
	Between channels and bus	**V**	1,400 ⎓	
	Between channels and ground	**V**	750 ⎓	
Consumption	Typical	**mA**	See Power consumption table on page 6/13	

(1) %FS: Tolerance as a% of full scale

Specifications of BMX ART 0414/0814 analog input modules

Input ranges for BMX ART 0414/0814 modules

Voltage range			± 40 mV	± 80 mV	± 160 mV	± 320 mV	± 640 mV	± 1.28 V
Typical input impedance		MΩ	10					
Maximum conversion value			± 102.5%					
Maximum resolution		**mV**	$40/2^{14}$	$80/2^{14}$	$160/2^{14}$	$320/2^{14}$	$640/2^{14}$	$1280/2^{14}$
Measurement tolerance *(1)*	At 25°C	%FS	0.05					
	Maximum at 0…60°C	%FS	0.15					
Temperature drift		**ppm/°C**	30					
Resistor range			400 Ω			4,000 Ω		
Type			2-, 3- or 4-wire					
Maximum conversion value			± 100%					
Maximum resolution		**mV**	$400/2^{14}$			$4,000/2^{14}$		
Measurement tolerance *(1)*	At 25°C	%FS	0.12					
	Maximum at 0…60°C	%FS	0.2					
Temperature drift		**ppm/°C**	25					
Temperature probe ranges			Pt100	Pt1000	Cu10	Ni100	Ni1000	
Measurement range		°C	According to IEC: -200...+850 According to US/JIS: -100...+450		-100...+260	-60...+180		
Resolution		°C	0.1					
Detection type			Open circuit (detection on each channel)					
Measurement tolerance *(1)*	At 25°C *(2)*	°C	± 2.1		± 4	± 2.1	0.7	
	Maximum at 0…60°C	°C	± 2		± 4	± 3.0	1.3	
Max. wiring resistance	4-wire	Ω	50	500	50		500	
	2/3-wire	Ω	20	200	20		200	
Temperature drift			30 ppm/°C					
Thermocouple ranges			B	E	J	K	L	
Measurement range		°C	+130...+1820	-270...+1000	-200...+760	-270...+1370	-200...+900	
Resolution		°C	0.1					
Detection type			Open circuit (detection on each channel)					
Measurement tolerance *(1)*	At 25°C	°C	± 3.5	± 3.7	± 2.8	± 3.7	± 3.0	
	Maximum at 0…60°C	°C	± 5	± 5	± 4.5	± 5	± 4.5	
Temperature drift		**ppm/°C**	25					
Thermocouple ranges (continued)			N	R	S	T	U	
Measurement range		°C	+270...+1300	-50...+1769	-50...+1769	-270...+400	-200...+600	
Resolution		°C	0.1					
Detection type			Open circuit (detection on each channel)					
Measurement tolerance *(1)*	At 25°C	°C	± 3.7	± 3.2	± 3.2	± 3.7	± 2.7	
	Maximum at 0…60°C	°C	± 5	± 4.5	± 4.5	± 5	± 4.5	
Temperature drift		**ppm/°C**	25					

(1) %FS: Tolerance as a% of full scale. ± 1°C with Pt100 temperature probe range, - 100...+ 200°C

2

Specifications of the BMX AMO 0210 analog output module

Module			BMX AMO 0210	
Output type			Isolated high-level outputs	
Number of channels			2	
Ranges	Voltage		± 10 V	
	Current		0...20 mA and 4...20 mA	
Resolution		**bits**	15 + sign	
Conversion time		ms	≤ 1	
Output power supply			Internal power supply via rack	
Output ranges			Voltage	Current
Adjustment range	Nominal	V	± 10 V	0...20 mA, 4...20 mA
	Maximum	**V**	± 11.25 V	24 mA
Load impedance		Ω	≥ 1,000	≤ 600
Detection type			Short-circuit	Open circuit
Measurement tolerance *(1)*	At 25°C	%FS	0.10	
	Maximum at 0…60°C	%FS	0.25	
Temperature drift			40 ppm/°C	
Recalibration			None, factory-calibrated	
Fallback mode *(2)*			Default or configurable	
Isolation	Between channels	V	750 ⎓	
	Between channels and bus	V	1,400 ⎓	
	Between channels and ground	V	1,400 ⎓	
Consumption	Typical	**mA**	See Power consumption table on page 6/13	

Specifications of BMX AMM 0600 mixed analog I/O module

Module			BMX AMM 0600								
Channel type			Non-isolated high-level inputs						Non-isolated high-level outputs		
Number of channels			4						2		
Ranges			± 10 V	0…5 V	0…10 V	1…5 V	0…20 mA	4…20 mA	± 10 V	0…20 mA	4…20 mA
Maximum conversion value	Voltage	**V**	± 11.25				–		± 11.25	–	
	Current	**mA**	–				0...30		–	0...24 mA	
Resolution		**bits**	14	12	13	12	12		12	11	
Filtering			1st order digital filtering by firmware								
Precision of internal conversion resistor			250 Ω, 0.2% - 25 ppm/°C						–		
Read cycle time	Fast	**ms**	1 + 1 x no. of channels used (periodic reading of no. of declared channels)						–		
	Default	**ms**	5 for 4 channels						–		
Conversion time		**ms**	≤ 1						≤ 2		
Permitted overload on the input channels	Voltage	V	± 30				–		± 11.25	–	
	Current	**mA**	–				± 30		–	0...24	
Measurement tolerance *(1)*	At 25°C	%FS	0.25				0.35		0.25		
	Maximum at 0…60°C	%FS	0.35				0.50		0.60		
Temperature drift			30 ppm/°C				50 ppm/°C		100 ppm/°C		
Recalibration			Internal						None, factory-calibrated		
Fallback mode *(2)*			–						Default or configurable		
Isolation	Between group of input channels and group of output channels	V	750 ⎓								
	Between channels and bus	V	1,400 ⎓								
	Between channels and ground	V	1,400 ⎓								
Consumption	Typical	**mA**	See Power consumption table on page 6/13								

(1) %FS: Error as a% of full scale
(2) Default: Output at 0 (V or mA). Configurable: Hold last value or set at predefined value for each channel.

Modicon® M340™ automation platform
Analog I/O modules



BMX AM● 0●●0



BMX ART 0414

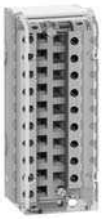

BMX FTB 20●0



BMX FTW ●01S



ABE 7CPA412/ ABE 7CPA21



BMX FCA ●●1



BMX FCA ●●2

References

Analog input modules

Input type	Input signal range	Resolution	Connection	No. of channels	Reference	Weight kg
Isolated high-level inputs	± 10 V, 0...10 V, 0...5 V, 1...5 V, ± 5 V 0...20 mA, 4...20 mA, ± 20 mA	16 bits	Via cage clamp, screw clamp or spring-type removable terminal block	4 fast channels	**BMX AMI 0410**	0.143
Isolated low-level inputs	Temperature probe, thermocouple ± 40 mV, ± 80 mV, ± 160 mV, ± 320 mV, ± 640 mV, ± 1.28 V 0...400 Ω, 0...4000 Ω	15 bits + sign	40-way connector	4 channels	**BMX ART 0414**	0.135
				8 channels	**BMX ART 0814**	0.165

Analog output module

Output type	Output signal range	Resolution	Connection	No. of channels	Reference	Weight kg
Isolated high-level outputs	± 10 V, 0...20 mA, 4...20 mA	16 bits	Via cage clamp, screw clamp or spring-type removable terminal block	2 channels	**BMX AMO 0210**	0.144

Mixed analog I/O module

Channel type	Signal range	Resolution	Connection	No. of channels	Reference	Weight kg
Mixed I/O, non-isolated	± 10 V, 0...10 V, 0...5 V, 1...5 V, 0...20 mA, 4...20 mA	14 bits or 12 bits depending on the range	Via cage clamp, screw clamp or spring-type removable terminal block	I: 4 channels Q: 2 channels	**BMX AMM 0600**	0.155

Connection accessories for analog modules *(1)*

Description	For use with modules	Type, composition	Length	Reference	Weight kg
20-way removable terminal blocks	BMX AMI 0410 BMX AMO 0210 BMX AMM 0600	Cage clamp	–	**BMX FTB 2000**	0.093
		Screw clamp	–	**BMX FTB 2010**	0.075
		Spring-type	–	**BMX FTB 2020**	0.060
Preformed cordsets	BMX AMI 0410 BMX AMO 0210 BMX AMM 0600	One 20-way removable terminal block (BMX FTB 2020) One end with color-coded flying leads	3 m	**BMX FTW 301S**	0.470
			5 m	**BMX FTW 501S**	0.700
	BMX ART 0414 BMX ART 0814 *(2)*	One 40-way connector One end with color-coded flying leads	3 m	**BMX FCW 301S**	0.480
			5 m	**BMX FCW 501S**	0.710

Modicon® Telefast® ABE 7 pre-wired system

Modicon Telefast ABE 7 sub-bases	BMX AMI 0410	Distribution of isolated power supplies Delivers 4 protected isolated power supplies for 4...20 mA inputs Direct connection of 4 inputs	–	**ABE 7CPA410**	0.180
	BMX ART 0414 BMX ART 0814	Connection and provision of cold junction compensation for thermocouples Direct connection of 4 inputs	–	**ABE 7CPA412**	0.180
	BMX AMO 0210	Direct connection of 2 outputs (2-channels of sub-bases are not used)	–	**ABE 7CPA21**	0.210
Preformed cordsets for ABE 7CPA●●● sub-bases	BMX AMI 0410 BMX AMO 0210	One 20-way removable terminal block and one 25-way SUB-D connector for ABE 7CPA410/21 sub-base	1.5 m	**BMX FCA150**	0.320
			3 m	**BMX FCA300**	0.500
			5 m	**BMX FCA500**	0.730
	BMX ART 0414 BMX ART 0814	One 40-way connector and one 25-way SUB-D connector for ABE 7CPA412 sub-base	1.5 m	**BMX FCA152**	0.330
			3 m	**BMX FCA302**	0.510
			5 m	**BMX FCA502**	0.740

(1) The shielding on the cordsets carrying the analog signals must always be connected to the **BMX XSP●●00** *shielding connection kit mounted under the rack holding the analog modules. See page 1/15.*

(2) The **BMX ART 0814** *8-channel module requires two* **ABE 7CPA412** *sub-bases and two* **BMX FCA●●2** *cordsets.*

Analog input/output modules

BMX AMI 0410/AMO 0210/AMM 0600

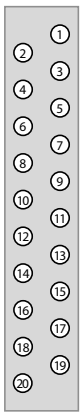

Connecting with
20-way removable terminal block

Correspondence of terminal block with the wire colors at the sheath end **BMX FTW 301S/501S** *preformed cordsets. See table on page 2/33.*

BMX ART 0414 (A) and BMX ART 0814 (A and B)

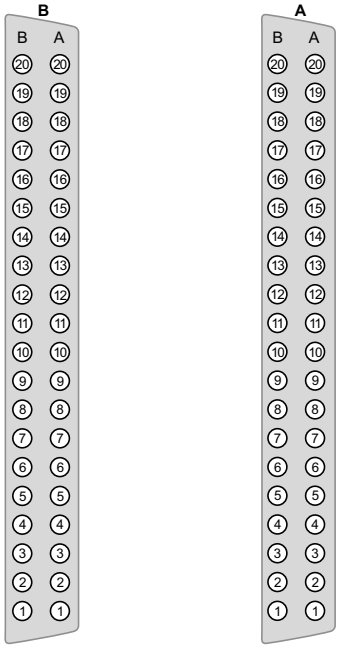

Connecting via one or two 40-way connector(s)

Correspondence of connector(s) 40-pin with the wire colors at the sheath end of **BMX FCW 301S/501S** *preformed cordsets. See table on page 2/33.*

Connecting example of 2, 3 or 4-wire temperature probes with cold-junction compensation

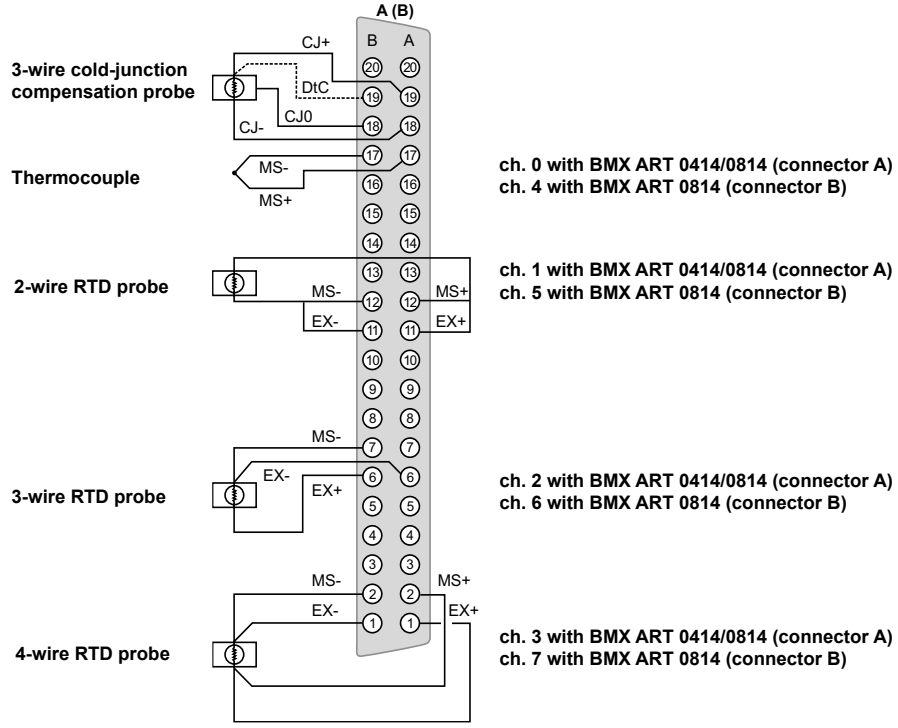

ch. 0 with BMX ART 0414/0814 (connector A)
ch. 4 with BMX ART 0814 (connector B)

ch. 1 with BMX ART 0414/0814 (connector A)
ch. 5 with BMX ART 0814 (connector B)

ch. 2 with BMX ART 0414/0814 (connector A)
ch. 6 with BMX ART 0814 (connector B)

ch. 3 with BMX ART 0414/0814 (connector A)
ch. 7 with BMX ART 0814 (connector B)

MS+: Input + RTD probe or thermocouple
MS-: Input - RTD probe or thermocouple
EX+: Output + RTD probe current generator
EX-: Output - RTD probe current generator

Modicon® M340™ automation platform

Analog I/O modules

Cordset color codes

BMX FCW 301S/501S preformed cordsets with 40-way connector and flying leads

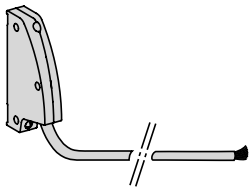

BMX FCW ●01S *cordset with one sheathed end with flying leads*

Connector pin No.		Color at sheath end	BMX ART 0414/0814 (A)	BMX ART 0814 (B)	Label
B20	N/C		–	–	
A20	N/C		–	–	
B19		White/blue	Cold-junction compensation	Cold-junction compensation	DtC
A19		White/amber			CJ+
B18		Blue/white			CJ0
A18		Amber/white			CJ-
B17		White/brown	Input - ch. 0	Input - ch. 4	MS-
A17		Brown/white	Input + ch. 0	Input + ch. 4	MS+
B16		White/green	I - generator ch. 0	I - generator ch. 4	EX-
A16		Green/white	I + generator ch. 0	I + generator ch. 4	EX+
B15	N/C		–	–	–
A15	N/C		–	–	–
B14	N/C		–	–	–
A14	N/C		–	–	–
B13	N/C		–	–	–
A13	N/C		–	–	–
B12		Red/blue	Input - ch. 1	Input - ch. 5	MS-
A12		Blue/red	Input + ch. 1	Input + ch. 5	MS+
B11		White/gray	I - generator ch. 1	I - generator ch. 5	EX-
A11		Gray/white	I + generator ch. 1	I + generator ch. 5	EX+
B10	N/C		–	–	–
A10	N/C		–	–	–
B9	N/C		–	–	–
A9	N/C		–	–	–
B8	N/C		–	–	–
A8	N/C		–	–	–
B7		Red/green	Input - ch. 2	Input - ch. 6	MS-
A7		Green/red	Input + ch. 2	Input+ ch. 6	MS+
B6		Red/amber	I - generator ch. 2	I - generator ch. 6	EX-
A6		Amber/red	I + generator ch. 2	I + generator ch. 6	EX+
B5	N/C		–	–	–
A5	N/C		–	–	–
B4	N/C		–	–	–
A4	N/C		–	–	–
B3	N/C		–	–	–
A3	N/C		–	–	–
B2		Red/gray	Input - ch. 3	Input - ch. 7	MS-
A2		Gray/red	Input + ch. 3	Input + ch. 7	MS+
B1		Red/brown	I - generator ch. 3	I - generator ch. 7	EX-
A1		Brown/red	I + generator ch. 3	I + generator ch. 7	EX+

BMX FTW 301S/501S preformed cordsets with 20-way terminal block at one and flying leads at the over

Correspondence between terminal block way and colored of wire

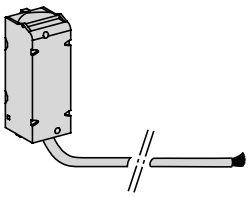

BMX FTW ●01S *cordset with one sheathed end with flying leads*

Terminal block way No.		Color at sheath end	BMX AMI 0410	BMX AMO 0210	BMX AMM 0600
1		Blue/white	V input ch. 0	–	V input ch. 0
2		White/blue	Common ch. 0	–	I input ch. 0
3		Amber/white	I input ch. 0	Output ch. 0	–
4		White/amber	–	Common ch. 0	–
5		Green/white	–	–	Common ch. 0
6		White/green	–	–	V input ch. 1
7		Brown/white	V input ch. 1	–	I input ch. 1
8		White/brown	Common ch. 1	–	Common ch. 1
9		Gray/white	I input ch. 1	–	V input ch. 2
10		White/gray	–	–	I input ch. 2
11		Blue/red	V input ch. 2	–	Common ch. 2
12		Red/blue	Common ch. 2	–	V input ch. 3
13		Amber/red	I input ch. 2	–	I input ch. 3
14		Red/amber	–	–	Common ch. 3
15		Green/red	–	–	–
16		Red/green	–	–	–
17		Red/brown	V input ch. 3	Output ch. 1	Output ch. 0
18		Brown/red	Common ch. 3	Common ch. 1	Common ch. 0
19		Gray/red	I input ch. 3	–	Output ch. 1
20		Red/gray	–	–	Common ch. 1