Suitable metal enclosures
Supplied as a kit



Basic composition

For the construction of a suitable metal enclosure, the following must be ordered separately:

- Galvanised-steel structure, with a single laser-welded profile:
  - Bottom and top frame with roof.
  - Set of 4 vertical uprights.
- Sheet-steel panels, painted with epoxy-polyester resin, textured RAL 7035 grey:
  - Rear panel to be screwed on from the outside.
  - Plain door, single or double, with hinges, catches for the locking bars and reinforcement frame, made up of two vertical uprights and two height-adjustable door cross rails.
  - Transparent Securit® glass door, with hinges and catches for the locking bars.
- Further options:
- Composition accessories such as:
  - Plinths with heights of 100 and 200 mm.
  - Cable-entry plate, plain, with 1 entry and 2 entries.
  - Lifting accessories, door equipment, enclosure suites.
  - Lighting accessories.
  - Ventilation systems, etc.
- Mounting accessories.
- Cable management accessories.
- Power distribution accessories.
- Modular distribution accessories.
- Lighting accessories.
- Aeration, ventilation and air-conditioning systems.

Certifications

- BV, DNV, UL*, CUL.
  *1D.- 1, 12, 12K
  2D.- 1, 12, 12K

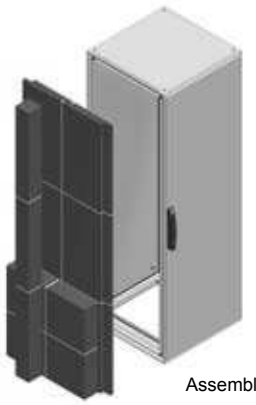

Assembled supply

Supply in kit form

Advantages of the kit formula

- Very short structure assembly time: only 15 minutes, with the attachment of 8 screws.
- Reduction of the required working surface.
- Reduction of the volume required for transport and storage.
- Possibility of working on the panels and assembling the enclosure directly before cabling.
- Possibility of having spare panels.
- Great freedom for creating your own enclosure, combining all the available elements.

Suitable metal enclosures
Supplied as a kit

Placement and screwing of the 4 vertical uprights at the corners of the top and bottom frames. Fixing by 8 screws, one at each corner of the enclosure.



Fixing of the hinges and the catches of the locking bar on the vertical uprights. Door installation inserting the captive pins of the hinge in their housing in the door.





Suspension of the rear panel using a self-centring piece to facilitate screwing.



Screwing the panel on using captive screws, screwed directly onto the structure.



Suitable metal enclosures

Supplied as a kit



Nominal dimensions (mm)			No. of doors	Vertical uprights	Bottom frame and top frame with roof	Rear panel	Side panels	Plain door (1)	Transparent door (Securit® glass) (1)	Mounting plate
Height (A)	Width (B)	Depth (C)		Painted with epoxy-polyester resin, textured RAL 7035						
1200	600	400	1	NSYSFV12	NSYSFC64	NSYBP126	NSY2SP124	NSYSFD126	NSYSFD126T	NSYMP126
1200	600	500	1	NSYSFV12	NSYSFC65	NSYBP126	NSY2SP125	NSYSFD126	NSYSFD126T	NSYMP126
1200	600	600	1	NSYSFV12	NSYSFC66	NSYBP126	NSY2SP126	NSYSFD126	NSYSFD126T	NSYMP126
1200	600	800	1	NSYSFV12	NSYSFC68	NSYBP126	NSY2SP128	NSYSFD126	NSYSFD126T	NSYMP126
1200	800	400	1	NSYSFV12	NSYSFC84	NSYBP128	NSY2SP124	NSYSFD128	NSYSFD128T	NSYMP128
1200	800	500	1	NSYSFV12	NSYSFC85	NSYBP128	NSY2SP125	NSYSFD128	NSYSFD128T	NSYMP128
1200	800	600	1	NSYSFV12	NSYSFC86	NSYBP128	NSY2SP126	NSYSFD128	NSYSFD128T	NSYMP128
1200	800	800	1	NSYSFV12	NSYSFC88	NSYBP128	NSY2SP128	NSYSFD128	NSYSFD128T	NSYMP128
1400	600	400	1	NSYSFV14	NSYSFC64	NSYBP146	NSY2SP144	NSYSFD146	NSYSFD146T	NSYMP146
1400	600	500	1	NSYSFV14	NSYSFC65	NSYBP146	NSY2SP145	NSYSFD146	NSYSFD146T	NSYMP146
1400	600	600	1	NSYSFV14	NSYSFC66	NSYBP146	NSY2SP146	NSYSFD146	NSYSFD146T	NSYMP146
1400	600	800	1	NSYSFV14	NSYSFC68	NSYBP146	NSY2SP148	NSYSFD146	NSYSFD146T	NSYMP146
1400	800	400	1	NSYSFV14	NSYSFC84	NSYBP148	NSY2SP144	NSYSFD148	NSYSFD148T	NSYMP148
1400	800	500	1	NSYSFV14	NSYSFC85	NSYBP148	NSY2SP145	NSYSFD148	NSYSFD148T	NSYMP148
1400	800	600	1	NSYSFV14	NSYSFC86	NSYBP148	NSY2SP146	NSYSFD148	NSYSFD148T	NSYMP148
1400	800	800	1	NSYSFV14	NSYSFC88	NSYBP148	NSY2SP148	NSYSFD148	NSYSFD148T	NSYMP148
1600	600	400	1	NSYSFV16	NSYSFC64	NSYBP166	NSY2SP164	NSYSFD166	NSYSFD166T	NSYMP166
1600	600	500	1	NSYSFV16	NSYSFC65	NSYBP166	NSY2SP165	NSYSFD166	NSYSFD166T	NSYMP166
1600	600	600	1	NSYSFV16	NSYSFC66	NSYBP166	NSY2SP166	NSYSFD166	NSYSFD166T	NSYMP166
1600	600	800	1	NSYSFV16	NSYSFC68	NSYBP166	NSY2SP168	NSYSFD166	NSYSFD166T	NSYMP166
1600	800	400	1	NSYSFV16	NSYSFC84	NSYBP168	NSY2SP164	NSYSFD168	NSYSFD168T	NSYMP168
1600	800	500	1	NSYSFV16	NSYSFC85	NSYBP168	NSY2SP165	NSYSFD168	NSYSFD168T	NSYMP168
1600	800	600	1	NSYSFV16	NSYSFC86	NSYBP168	NSY2SP166	NSYSFD168	NSYSFD168T	NSYMP168
1600	800	800	1	NSYSFV16	NSYSFC88	NSYBP168	NSY2SP168	NSYSFD168	NSYSFD168T	NSYMP168
1800	400	400	1	NSYSFV18	NSYSFC44	NSYBP184	NSY2SP184	NSYSFD184	-	-
1800	400	500	1	NSYSFV18	NSYSFC45	NSYBP184	NSY2SP185	NSYSFD184	-	-
1800	400	600	1	NSYSFV18	NSYSFC46	NSYBP184	NSY2SP186	NSYSFD184	-	-
1800	400	800	1	NSYSFV18	NSYSFC48	NSYBP184	NSY2SP188	NSYSFD184	-	-
1800	600	400	1	NSYSFV18	NSYSFC64	NSYBP186	NSY2SP184	NSYSFD186	NSYSFD186T	NSYMP186
1800	600	500	1	NSYSFV18	NSYSFC65	NSYBP186	NSY2SP185	NSYSFD186	NSYSFD186T	NSYMP186
1800	600	600	1	NSYSFV18	NSYSFC66	NSYBP186	NSY2SP186	NSYSFD186	NSYSFD186T	NSYMP186
1800	600	800	1	NSYSFV18	NSYSFC68	NSYBP186	NSY2SP188	NSYSFD186	NSYSFD186T	NSYMP186
1800	800	400	1	NSYSFV18	NSYSFC84	NSYBP188	NSY2SP184	NSYSFD188	NSYSFD188T	NSYMP188
1800	800	500	1	NSYSFV18	NSYSFC85	NSYBP188	NSY2SP185	NSYSFD188	NSYSFD188T	NSYMP188
1800	800	600	1	NSYSFV18	NSYSFC86	NSYBP188	NSY2SP186	NSYSFD188	NSYSFD188T	NSYMP188
1800	800	600	2	NSYSFV18	NSYSFC86	NSYBP188	NSY2SP186	NSYSFD1882D	-	NSYMP188
1800	800	800	1	NSYSFV18	NSYSFC88	NSYBP188	NSY2SP188	NSYSFD188	NSYSFD188T	NSYMP188
1800	800	800	2	NSYSFV18	NSYSFC88	NSYBP188	NSY2SP188	NSYSFD1882D	-	NSYMP188
1800	1000	400	1	NSYSFV18	NSYSFC104	NSYBP1810	NSY2SP184	NSYSFD1810	NSYSFD1810T	NSYMP1810
1800	1000	400	2	NSYSFV18	NSYSFC104	NSYBP1810	NSY2SP184	NSYSFD18102D	-	NSYMP1810
1800	1000	500	1	NSYSFV18	NSYSFC105	NSYBP1810	NSY2SP185	NSYSFD1810	NSYSFD1810T	NSYMP1810
1800	1000	600	1	NSYSFV18	NSYSFC106	NSYBP1810	NSY2SP186	NSYSFD1810	NSYSFD1810T	NSYMP1810
1800	1000	600	2	NSYSFV18	NSYSFC106	NSYBP1810	NSY2SP186	NSYSFD18102D	-	NSYMP1810
1800	1000	800	1	NSYSFV18	NSYSFC108	NSYBP1810	NSY2SP188	NSYSFD1810	NSYSFD1810T	NSYMP1810
1800	1000	800	2	NSYSFV18	NSYSFC108	NSYBP1810	NSY2SP188	NSYSFD18102D	-	NSYMP1810
1800	1200	400	2	NSYSFV18	NSYSFC124	NSYBP1812	NSY2SP184	NSYSFD18122D	NSYSFD18122DT	NSYMP1812
1800	1200	500	2	NSYSFV18	NSYSFC125	NSYBP1812	NSY2SP185	NSYSFD18122D	NSYSFD18122DT	NSYMP1812
1800	1200	600	2	NSYSFV18	NSYSFC126	NSYBP1812	NSY2SP186	NSYSFD18122D	NSYSFD18122DT	NSYMP1812
1800	1200	800	2	NSYSFV18	NSYSFC128	NSYBP1812	NSY2SP188	NSYSFD18122D	NSYSFD18122DT	NSYMP1812

(1) Hinges, locking bar catches and handle with 5-mm double-bar insert included.

Enclosure coupling kit
page 28



Plinth
page 32



Cable-gland plate
pages 45 and 56

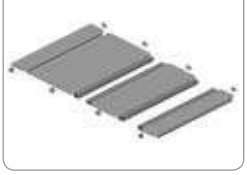

Lifting eyebolts
page 51



Door cross rail
page 160



Suitable metal enclosures

Supplied as a kit



Nominal dimensions (mm)			No. of doors	Vertical uprights	Bottom frame and top frame with roof	Rear panel	Side panels	Plain door (1)	Transparent door (Securit® glass) (1)	Mounting plate
Height (A)	Width (B)	Depth (C)		Painted with epoxy-polyester resin, textured RAL 7035						
2000	300	500	1	NSYSFV20	NSYSFC35	NSYBP203	NSY2SP205	NSYSFD203	-	-
2000	300	600	1	NSYSFV20	NSYSFC36	NSYBP203	NSY2SP206	NSYSFD203	-	-
2000	400	400	1	NSYSFV20	NSYSFC44	NSYBP204	NSY2SP204	NSYSFD204	-	-
2000	400	500	1	NSYSFV20	NSYSFC45	NSYBP204	NSY2SP205	NSYSFD204	-	-
2000	400	600	1	NSYSFV20	NSYSFC46	NSYBP204	NSY2SP206	NSYSFD204	-	-
2000	400	800	1	NSYSFV20	NSYSFC48	NSYBP204	NSY2SP208	NSYSFD204	-	-
2000	600	400	1	NSYSFV20	NSYSFC64	NSYBP206	NSY2SP204	NSYSFD206	NSYSFD206T	NSYMP206
2000	600	500	1	NSYSFV20	NSYSFC65	NSYBP206	NSY2SP205	NSYSFD206	NSYSFD206T	NSYMP206
2000	600	600	1	NSYSFV20	NSYSFC66	NSYBP206	NSY2SP206	NSYSFD206	NSYSFD206T	NSYMP206
2000	600	800	1	NSYSFV20	NSYSFC68	NSYBP206	NSY2SP208	NSYSFD206	NSYSFD206T	NSYMP206
2000	800	400	1	NSYSFV20	NSYSFC84	NSYBP208	NSY2SP204	NSYSFD208	NSYSFD208T	NSYMP208
2000	800	500	1	NSYSFV20	NSYSFC85	NSYBP208	NSY2SP205	NSYSFD208	NSYSFD208T	NSYMP208
2000	800	600	1	NSYSFV20	NSYSFC86	NSYBP208	NSY2SP206	NSYSFD208	NSYSFD208T	NSYMP208
2000	800	600	2	NSYSFV20	NSYSFC86	NSYBP208	NSY2SP206	NSYSFD2082D	-	NSYMP208
2000	800	800	1	NSYSFV20	NSYSFC88	NSYBP208	NSY2SP208	NSYSFD208	NSYSFD208T	NSYMP208
2000	800	800	2	NSYSFV20	NSYSFC88	NSYBP208	NSY2SP208	NSYSFD2082D	-	NSYMP208
2000	1000	400	1	NSYSFV20	NSYSFC104	NSYBP2010	NSY2SP204	NSYSFD2010	NSYSFD2010T	NSYMP2010
2000	1000	400	2	NSYSFV20	NSYSFC104	NSYBP2010	NSY2SP204	NSYSFD20102D	-	NSYMP2010
2000	1000	500	1	NSYSFV20	NSYSFC105	NSYBP2010	NSY2SP205	NSYSFD2010	NSYSFD2010T	NSYMP2010
2000	1000	500	2	NSYSFV20	NSYSFC105	NSYBP2010	NSY2SP205	NSYSFD20102D	-	NSYMP2010
2000	1000	600	1	NSYSFV20	NSYSFC106	NSYBP2010	NSY2SP206	NSYSFD2010	NSYSFD2010T	NSYMP2010
2000	1000	600	2	NSYSFV20	NSYSFC106	NSYBP2010	NSY2SP206	NSYSFD20102D	-	NSYMP2010
2000	1000	800	1	NSYSFV20	NSYSFC108	NSYBP2010	NSY2SP208	NSYSFD2010	NSYSFD2010T	NSYMP2010
2000	1000	800	2	NSYSFV20	NSYSFC108	NSYBP2010	NSY2SP208	NSYSFD20102D	-	NSYMP2010
2000	1200	400	2	NSYSFV20	NSYSFC124	NSYBP2012	NSY2SP204	NSYSFD20122D	NSYSFD20122DT	NSYMP2012
2000	1200	500	2	NSYSFV20	NSYSFC125	NSYBP2012	NSY2SP205	NSYSFD20122D	NSYSFD20122DT	NSYMP2012
2000	1200	600	2	NSYSFV20	NSYSFC126	NSYBP2012	NSY2SP206	NSYSFD20122D	NSYSFD20122DT	NSYMP2012
2000	1200	800	2	NSYSFV20	NSYSFC128	NSYBP2012	NSY2SP208	NSYSFD20122D	NSYSFD20122DT	NSYMP2012
2000	1600	400	2	NSYSFV20	NSYSFC164	NSYBP2016	NSY2SP204	NSYSFD20162D	-	NSYMP2016
2000	1600	500	2	NSYSFV20	NSYSFC165	NSYBP2016	NSY2SP205	NSYSFD20162D	-	NSYMP2016
2000	1600	600	2	NSYSFV20	NSYSFC166	NSYBP2016	NSY2SP206	NSYSFD20162D	-	NSYMP2016
2200	400	400	1	NSYSFV22	NSYSFC44	NSYBP224	NSY2SP224	NSYSFD224	-	-
2200	400	500	1	NSYSFV22	NSYSFC45	NSYBP224	NSY2SP225	NSYSFD224	-	-
2200	400	600	1	NSYSFV22	NSYSFC46	NSYBP224	NSY2SP226	NSYSFD224	-	-
2200	400	800	1	NSYSFV22	NSYSFC48	NSYBP224	NSY2SP228	NSYSFD224	-	-
2200	600	400	1	NSYSFV22	NSYSFC64	NSYBP226	NSY2SP224	NSYSFD226	NSYSFD226T	NSYMP226
2200	600	500	1	NSYSFV22	NSYSFC65	NSYBP226	NSY2SP225	NSYSFD226	NSYSFD226T	NSYMP226
2200	600	600	1	NSYSFV22	NSYSFC66	NSYBP226	NSY2SP226	NSYSFD226	NSYSFD226T	NSYMP226
2200	600	800	1	NSYSFV22	NSYSFC68	NSYBP226	NSY2SP228	NSYSFD226	NSYSFD226T	NSYMP226
2200	800	400	1	NSYSFV22	NSYSFC84	NSYBP228	NSY2SP224	NSYSFD228	NSYSFD228T	NSYMP228
2200	800	500	1	NSYSFV22	NSYSFC85	NSYBP228	NSY2SP225	NSYSFD228	NSYSFD228T	NSYMP228
2200	800	600	1	NSYSFV22	NSYSFC86	NSYBP228	NSY2SP226	NSYSFD228	NSYSFD228T	NSYMP228
2200	800	800	1	NSYSFV22	NSYSFC88	NSYBP228	NSY2SP228	NSYSFD228	NSYSFD228T	NSYMP228
2200	1000	400	1	NSYSFV22	NSYSFC104	NSYBP2210	NSY2SP224	NSYSFD2210	NSYSFD2210T	NSYMP2210
2200	1000	500	1	NSYSFV22	NSYSFC105	NSYBP2210	NSY2SP225	NSYSFD2210	NSYSFD2210T	NSYMP2210
2200	1000	600	1	NSYSFV22	NSYSFC106	NSYBP2210	NSY2SP226	NSYSFD2210	NSYSFD2210T	NSYMP2210
2200	1000	800	1	NSYSFV22	NSYSFC108	NSYBP2210	NSY2SP228	NSYSFD2210	NSYSFD2210T	NSYMP2210
2200	1200	400	2	NSYSFV22	NSYSFC124	NSYBP2212	NSY2SP224	NSYSFD22122D	NSYSFD22122DT	NSYMP2212
2200	1200	500	2	NSYSFV22	NSYSFC125	NSYBP2212	NSY2SP225	NSYSFD22122D	NSYSFD22122DT	NSYMP2212
2200	1200	600	2	NSYSFV22	NSYSFC126	NSYBP2212	NSY2SP226	NSYSFD22122D	NSYSFD22122DT	NSYMP2212
2200	1200	800	2	NSYSFV22	NSYSFC128	NSYBP2212	NSY2SP228	NSYSFD22122D	NSYSFD22122DT	NSYMP2212

(1) Hinges, locking bar catches and handle with 5-mm double-bar insert included.

Cross rails page 161

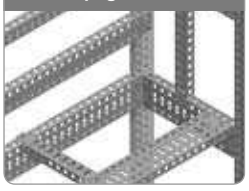

Trays page 174



Cable management page 238

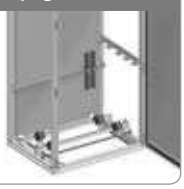

Modular distribution page 200



19" racks page 92



Suitable metal enclosures
Dimensions

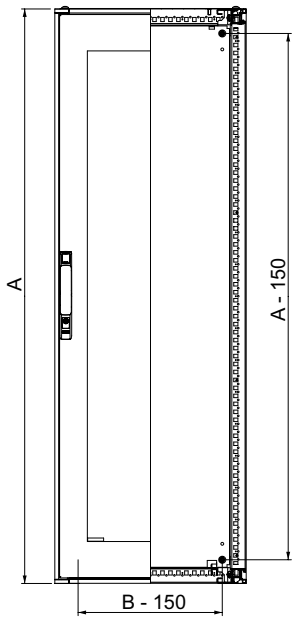

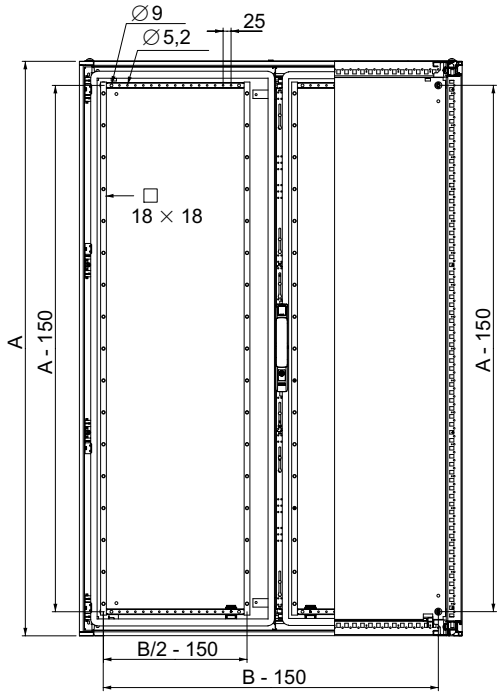

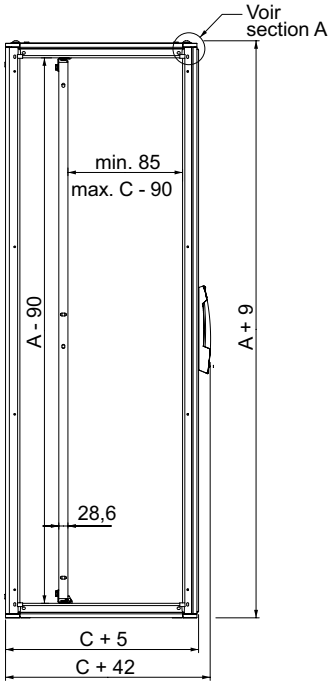

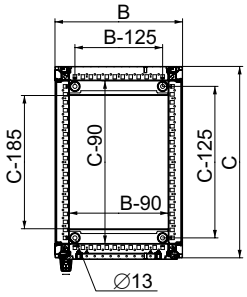

Cellules largeur 300 et 400 mm.

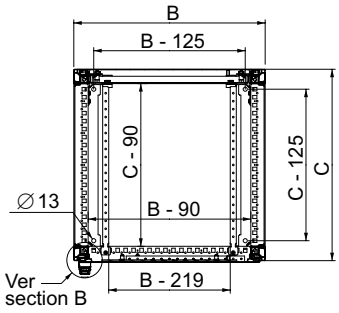

Cellules largeur 600, 800 et 1000 mm.

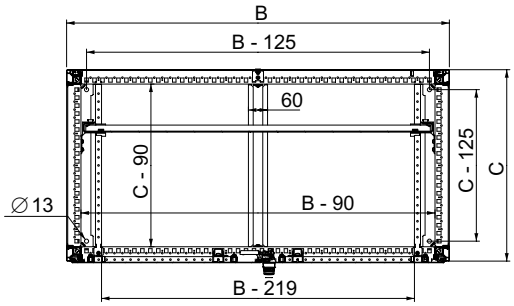

Cellules largeur 1200 et 1600 mm.

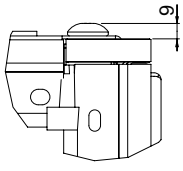

SECTION A

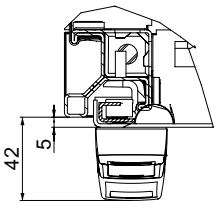

SECTION B