MOELLER

Type: **P1–25/I2/SVB–SW**
Article No.: **207294**
Sales text **I2/SVB main switch**



Ordering information			
			BME–CAT Fotos
Produktgruppen–Bezeichnung			T rotary switches, P switch–disconnectors, technical data
			Load current switches
			Main switches, maintenance switches
Design			Surface mounting
Basic type for ... insert mounting form			P1–25/...
Mounting form			I2/SVB–SW
No. of poles		M	3
Description			Without Emergency–Stop function

General			
Standards			IEC/EN 60947, VDE 0660, IEC/EN 60204, CSA, UL switch disconnector according to IEC/EN 60947–3
Lifespan, mechanical	Operations	× 10^6	0,3
Maximum operating frequency	Operations/h		50

Climatic proofing			Damp heat, constant, to IEC 60068–2–78; Damp heat, cyclical, to IEC 60068–2–30
Ambient temperature			
Open		°C	––25...50
Enclosed		°C	––25...40
Mounting position			As required
Mechanical shock resistance to IEC 60068–2–27	Half–sinusoidal shock 20 ms	g	> 15
Contacts			
Rated operational voltage	U_e	V AC	690
Rated impulse withstand voltage	U_{imp}	V AC	6000
Overvoltage category/pollution degree			III/3
Rated uninterrupted current			
open	I_u	A	25
Enclosed	I_u	A	25
Load rating with intermittent operation, class 12			
AB 25 % DF		× I_e	2
AB 40 % DF		× I_e	1,6
AB 60 % DF		× I_e	1,3
Short–circuit rating			
Fuse		A gG/gL	25
Rated short–time withstand current (1 s current)	I_{cw}	A_{rms}	640
Switching angles		°	90
Current heat loss per contact at I_e		W	1,1
Terminal capacities			
Solid or stranded		mm^2	1 × (1.5 – 6) 2 × (1.5 – 6)
Flexible with ferrule to DIN 46228		mm^2	1 × (1 – 4) 2 × (1 – 4)
Terminal screw			M4
Tightening torque		Nm	1.6
Switching capacity			
AC			
Rated making capacity cos = 0.35		A	240
Rated breaking capacity, motor load switch cos = 0.35			

230 V		A	190
400 V		A	150
500 V		A	170
690 V		A	150
Rated operational current 440 V load–break switch AC–21A	I_e	A	25
AC–3 motor load switch motor rating			
230 V	*P*	kW	5,5
400 V	*P*	kW	7,5
500 V	*P*	kW	7,5
690 V	*P*	kW	7,5
AC–23A Motor load switches (main switches maintenance switches)			
230 V	*P*	kW	7
400 V	*P*	kW	13
500 V	*P*	kW	11
690 V	*P*	kW	11
DC			
DC–1, Load–break switches L/R = 1 ms			
Rated operational current	I_e	A	25
Voltage per contact pair in series		V	60
DC–23A, motor load switch L/R = 15 ms			
24 V			
Rated operational current	I_e	A	25
Contacts		Quantity	1
48 V			
Rated operational current	I_e	A	25
Contacts		Quantity	2
60 V			
Rated operational current	I_e	A	25
Contacts		Quantity	3
120 V			
Rated operational current	I_e	A	12
Contacts		Quantity	3
Notes			
Notes			

			Main switch characteristics to IEC/EN 60204; positive opening of contacts, operator element positively located on shaft The rated uninterrupted current I_u is stated at max. connected cross–section. For terminal capacity solid, stranded and flexible: Max. 2 cross–section sizes difference admissible when using 2 conductors.

Dimensions

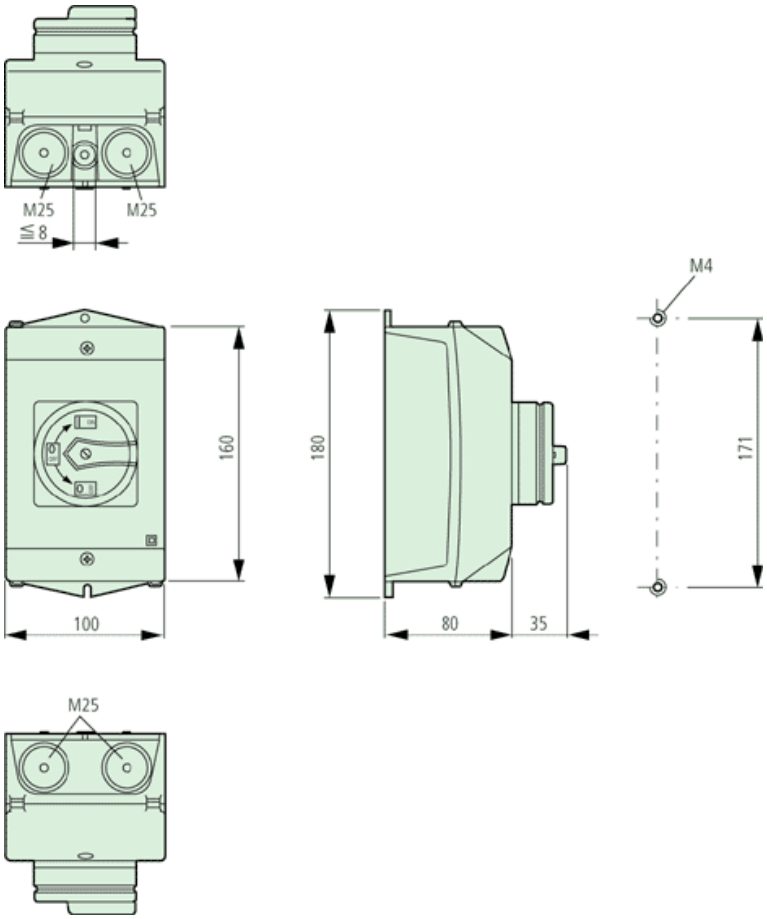

Dimensions

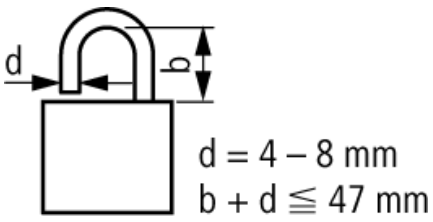

Characteristic curve

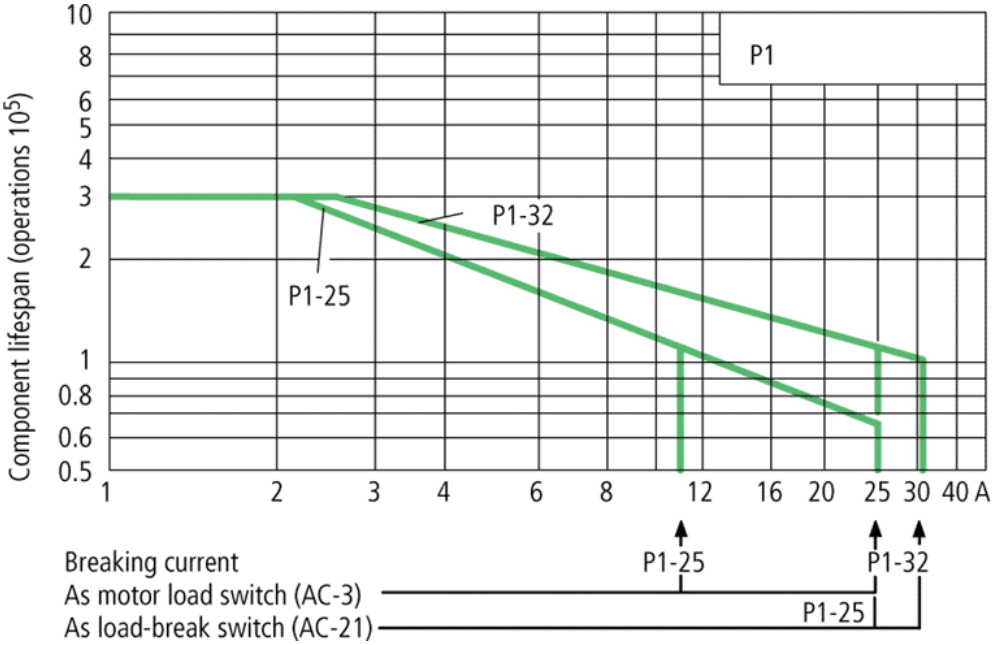

For utilisation category AC–4 (extreme load: 100 % inching, reversing or plugging)
The blocked rotor current of the motor should not exceed the rated current of the switch for AC–21A to ensure a reasonable device lifespan.

Moeller GmbH, Hein–Moeller–Str. 7–11, D–53115 Bonn
E–Mail: catalog@moeller.net, Internet: www.moeller.net, http://catalog.moeller.net
HPL–C2007G V2.1 © 2007 by Moeller GmbH