Composition accessories
Locking system



> Advantage:
Easy opening.

Handle for shape inserts and cylindrical barrels

- Handle lock allowing the door to be opened: with a single movement.
- Standard handle for the entire range of **Spacial SF** and **Spacial SM** enclosures; does not include the insert when ordered as an accessory.
- Easy and quick installation of inserts without needing screws.
- Allows the installation of shape inserts and cylindrical barrels.
- The symmetric design of the locking system makes it easy to change the opening direction of the door, right/left. Easy fixing by means of screws.
- Space reserved for enclosure identification, 21 × 27 mm, protected by a label frame.
- Material:

– Handle: polyamide 6 with 30% fibreglass, RAL 9005 black.
– Label frame: polycarbonate.

- UV resistant.
- Fire resistance: 650 °C.
- Resistance to external mechanical impacts: IK10.

Supply: standard handle and fixing elements (insert not included).

Reference
NSYSFHS1

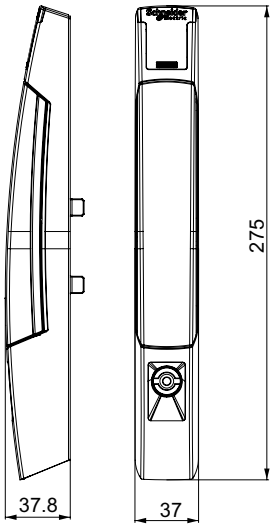

Composition accessories
Locking system

Shape inserts and cylindrical barrels

Shape inserts		Reference
	6-mm square insert	**NSYINS61**
	Female 6-mm square insert	**NSYINS6G1**
	7-mm square insert	**NSYINS71**
	8-mm square insert	**NSYINS81**
	Female 8-mm square insert	**NSYINS8G1**
	8-mm square insert with slot	**NSYINS8H1**
	6.5-mm triangular insert	**NSYINT61**
	7-mm triangular insert	**NSYINT71**
	8-mm triangular insert	**NSYINT81**
	9-mm triangular insert	**NSYINT91**
	10-mm triangular insert	**NSYINT101**
	10-mm keyless hexagonal insert	**NSYINH31**
	3-mm double-bar insert	**NSYINDB31**
	5-mm double-bar insert	**NSYINDB51**
	Daimler Benz insert	**NSYINBENZ1**
	Fiat insert	**NSYINFIAT1**
	Keyless USA slot insert	**NSYINUSA1**
	Keyless 2 × 4 slot insert	**NSYIN241**
	Crown insert	**NSYINCW1**

Push button		Reference
	Push button	**NSYINPULS1**

> For installing shape inserts and cylindrical barrels in handle types DIN, KABA and ASSA (ref. **NSYSFHD2**), see adapter (ref. **NSYLADP**) page **69**.

Cylindrical barrels		Reference
	405E key lock	**NSYIN405E1**
	421E key lock	**NSYIN421E1**
	455 key lock	**NSYIN4551**
	1242E key lock	**NSYIN1242E1**
	1332E key lock	**NSYIN1332E1**
	2124E key lock	**NSYIN2124E1**
	2131A key lock	**NSYIN2131A1**
	2132A key lock	**NSYIN2132A1**
	2331A key lock	**NSYIN2331A1**
	2433A key lock	**NSYIN2433A1**
	2452E key lock	**NSYIN2452E1**
	3113A key lock	**NSYIN3113A1**
	3122E key lock	**NSYIN3122E1**
	3123A key lock	**NSYIN3123A1**
	3133A key lock	**NSYIN3133A1**
	3422E key lock	**NSYIN3422E1**
	3432E key lock	**NSYIN3432E1**
	EDF1300 key lock	**NSYINF1301**
	EDF1400 key lock	**NSYINF1401**
	Michelin 8079 keyless lock	**NSYINICHEL8791**
	Michelin 8133 keyless lock	**NSYINICHEL8131**
	Michelin 8376 keyless lock	**NSYINICHEL8371**
	E1 keyless lock	**NSYINE11**

Composition accessories
Locking system



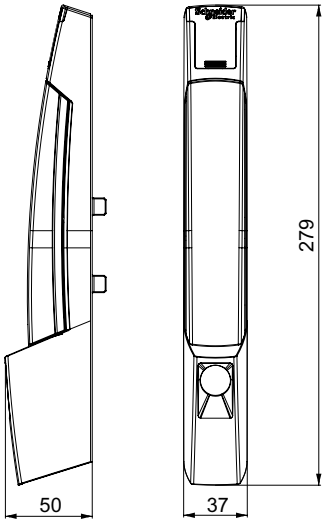

Handle for insert types DIN, KABA, ASSA

- Easy-opening handle lock: requires a single movement.
- The inserts are easily and quickly mounted without any screws and allow the installation of profiled DIN, KABA and ASSA locks.
- To install shape inserts or cylindrical barrels, it is necessary to add adapter ref. **NSYLADP**.
- The symmetric design of the locking system makes it easy to change the opening direction of the door, right/left. Mounting on the door by means of screws.
- Space reserved for enclosure identification, 21 × 27 mm, protected by a label frame.
- Material:

– Handle: polyamide 6 with 30% fibreglass, RAL-9005 colour.
– Label frame: polycarbonate.

- UV resistant.
- Fire resistance: 650 °C.
- Resistance to external mechanical impacts: IK10.

Supply: one handle for DIN, KABA and ASSA inserts and fixing elements (insert not included).

Reference
NSYSFHD2

Lock system: DIN, KABA and ASSA		Reference
	Adapter for DIN cylinder	**NSYINDIN2**
	Adapter for KABA cylinder (1)	**NSYINKBA2**
	Adapter for ASSA cylinder	**NSYINASSA2**
	1242E key lock	**NSYIN1242E2**
	Reinforced key lock	**NSYINKR2**
	JIS key lock	**NSYINKJIS2**
	FAC key lock	**NSYINKFAC2**

(1) Adapter for receiving the KABA8, KABA20 and KABA start cylinders.

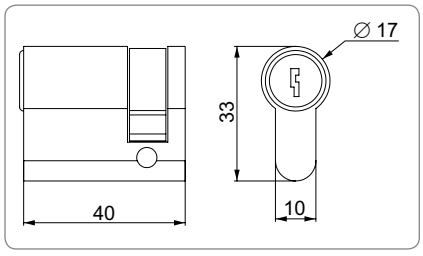

Insert dimensions for DIN adapters.

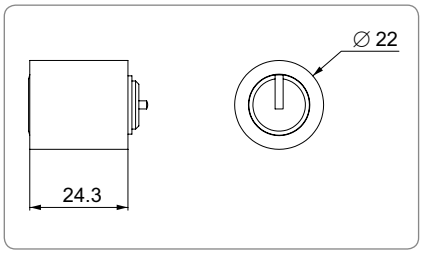

Insert dimensions for KABA adapters.

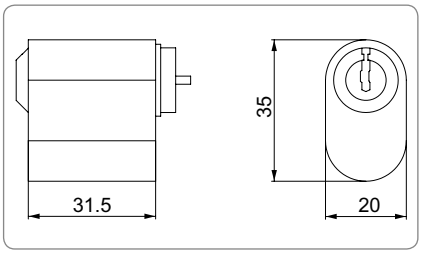

Insert dimensions for ASSA adapters.

Composition accessories
Locking system



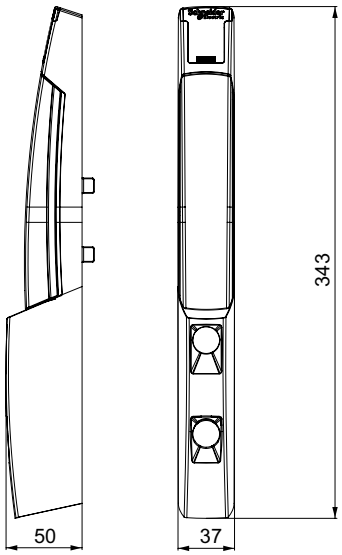

Double-insert handle

- Easy-opening handle lock: requires a single movement. Allows two inserts to be installed in the same lock.
- To install shape inserts or cylindrical barrels, it is necessary to add adapter ref. **NSYLADP**.
- The handle can perform the "AND" and "OR" functions. The elements for performing these functions are supplied with the handle.

– "AND" function: one insert blocks the activation of the other insert.
– "OR" function: either insert can release the handle.

- The symmetric design of the locking system makes it easy to change the opening direction of the door, right/left. Mounting on the door by means of screws.
- Space reserved for enclosure identification, 21 × 27 mm, protected by a label frame.
- Material:

– Handle: polyamide 6 with 30% fibreglass, RAL 9005 colour.
– Label frame: polycarbonate.

- UV resistant.
- Fire resistance: 650 °C.
- Resistance to external mechanical impacts: IK10.

Supply: one double-insert handle, elements for performing the "AND" and "OR" functions and fixing elements (insert not included).

Reference
NSYSFHD3

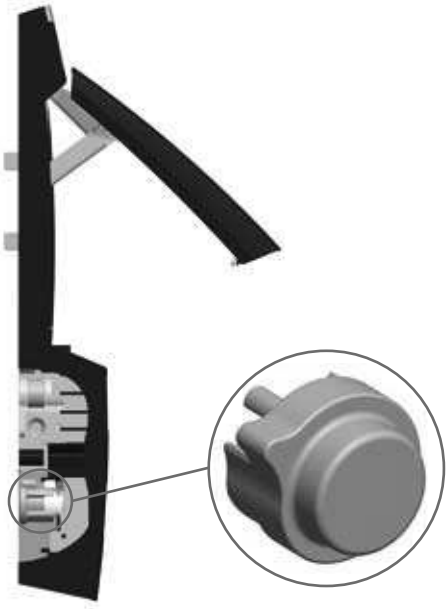

Adapter for shape inserts and cylindrical barrels

- Plastic adapter for installing shape inserts and cylindrical barrels in handle lock types DIN, KABA, ASSA.

Supply: 1 unit.

- See shape inserts and cylindrical barrels on page **67**.
- See insert types DIN, KABA, ASSA on page **68**.

Reference
NSYLADP

Composition accessories
Locking system





Padlock locking

- Padlock locking system, for installation in all the handles of the **Spacial SF** and **Spacial SM** enclosures.
- Bolt with 7.5-mm drill hole.

Supply: one cut-out handle, bolt for padlock and bolt fixing screw.

Reference
NSYBLKH123





CNOMO kit

- Locking system to be installed on the central locking bar of the door. It works as a locking bar immobiliser, preventing the handle from closing while the door is still open.
- It is compatible with all handle lock versions, except the flat lock and the small flat lock.

Supply: one mechanism, 6.5-mm triangular insert, key and fixing elements.

Reference
NSYCNOH123

Composition accessories
Locking system



Flat escutcheon lock

- Optional flat escutcheon lock. Replaces the handle lock.
- The symmetric design of the locking system makes it easy to change the opening direction of the door, right/left. Mounting on the door by means of screws.
- Possibility of changing the turning direction of the insert.
- Material: polyamide 6 with 30% fibreglass, RAL 9005 black.
- UV resistant.
- Fire resistance: 650 ºC.
- Resistance to external mechanical impacts: IK10.

Supply: flat lock, shape insert, key and fixing elements.

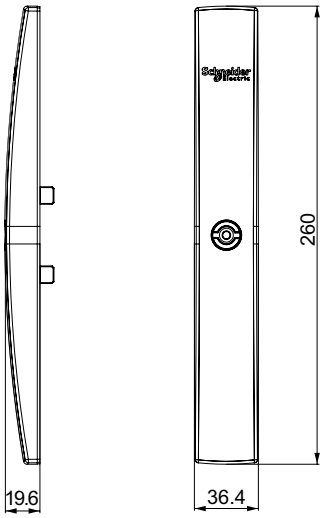

Models		Reference
	Flat lock + screwdriver slot, 2-mm groove	**NSYSFLOCK24**
	Flat lock + 8-mm triangular insert	**NSYSFLOCKT8**
	Flat lock + 7-mm triangular insert	**NSYSFLOCKT7**
	Flat lock + 6.5-mm triangular insert	**NSYSFLOCKT6**
	Flat lock + 8-mm female square insert	**NSYSFLOCKSG8**
	Flat lock + 8-mm square insert	**NSYSFLOCKS8**
	Flat lock + 7-mm square insert	**NSYSFLOCKS7**
	Flat lock + 6-mm square insert	**NSYSFLOCKS6**
	Flat lock + 5-mm double-bar insert	**NSYSFLOCKDB5**