SIEMENS

Data sheet 5TT4207-0



Figure similar

RELAY,N-TYPE W 2 CHANGEOV.CONT. CONTACT FOR AC 230V 16A CONTROL AC 230V

Model		
product brand name		SENTRON
Product designation		Switching relays
Design of the product		With 2 CO
Design of the switching function		2 CO
General technical data		
Operating range factor / of control voltage_1		0.8
Electrical endurance (switching cycles)		50 000
Galvanic isolation / between magnet coil and contact		Yes
Switching voltage / of the contacts / with AC / minimum	V	10
Switching current / with AC / per contact / minimum	mA	100
Voltage		
Control voltage / with AC / Rated value / maximum	V	230
Surge voltage resistance / Rated value	kV	4
Supply voltage		
Supply voltage		
• minimum	V	400
• maximum	V	400
Type of voltage / of the supply voltage		AC
Protection class		
Protection class IP		IP20, with connected conductors
Switching capacity		

Changes preserved
© Copyright Siemens AG

Switching capacity apparent power		
• for uncompensated fluorescent lamp load	V·A	400
Switching capacity current / at cos phi 0.6	A	16
Switching capacity active power / with filament lamp load	W	1 200

Dissipation

Active power loss		
• for rated value of the current / with AC / in hot operating state / per pole	W	1
• Apparent power loss / of the magnet coil / with pulse / Rated value	V·A	3
• Active power loss / of the magnet coil / with pulse / Rated value	W	2.4
• Active power loss / at 16 A / per contact / Rated value	W	1

Main circuit

Operating frequency / Rated value	Hz	50
Operating voltage / with AC / Rated value / maximum	V	400
Operating current		
• Rated value	A	16
• at cos phi 0.6 ... 1 / Rated value	A	16

Control current

Type of voltage		
• of control voltage_1		AC
Control voltage		
• _1 / initial value	V	230
• _1 / Full-scale value	V	230
Control voltage frequency		
• _1 / initial value	Hz	50
• _1 / Full-scale value	Hz	50
Operating range factor / of control voltage_2		1.1

Product function

Product function / direct operation		Yes

Inputs Outputs

Relay design		partially electronic

Number

Number of terminals / with cross-head screw		1
Number of NC contacts		0
Number of NO contacts		0
Number of CO contacts		2

Changes preserved
© Copyright Siemens AG

Connections

Connectable conductor cross-section		
• for flexible conductor / with core end processing		
— minimum	mm²	1
— maximum	mm²	6
• for rigid conductor		
— minimum	mm²	1.5
— maximum	mm²	6

Mechanical Design

Width of opening / of the contacts	mm	1.2
mounting position		any
Installation depth	mm	90
Number of width units		1
Mounting type		DIN rail
Required spacing / for live parts	mm	6

Environmental conditions

Ambient temperature		
• minimum	°C	-10
• maximum	°C	40
• with relative humidity 95% / acc. to DIN 50015	°C	35

Certificates

General Product Approval

Declaration of Conformity

CCC GOST VDE other EG-Konf.

Test Certificates

other

Further information

Information- and Downloadcenter (Catalogs, Brochures,…)
http://www.siemens.com/lowvoltage/catalogs

Industry Mall (Online ordering system)
https://eb.automation.siemens.com/mall/en/WW/Catalog/Product/5TT42070

Service&Support (Manuals, Certificates, Characteristics, FAQs,...)
http://support.automation.siemens.com/WW/view/en/5TT42070/all

Changes preserved
© Copyright Siemens AG

Image database (product images, 2D dimension drawings, 3D models, device circuit diagrams, ...)
http://www.automation.siemens.com/bilddb/cax_en.aspx?mlfb=5TT42070

CAx-Online-Generator
http://www.siemens.com/cax

Tender specifications
http://ausschreibungstexte.siemens.com/tiplv

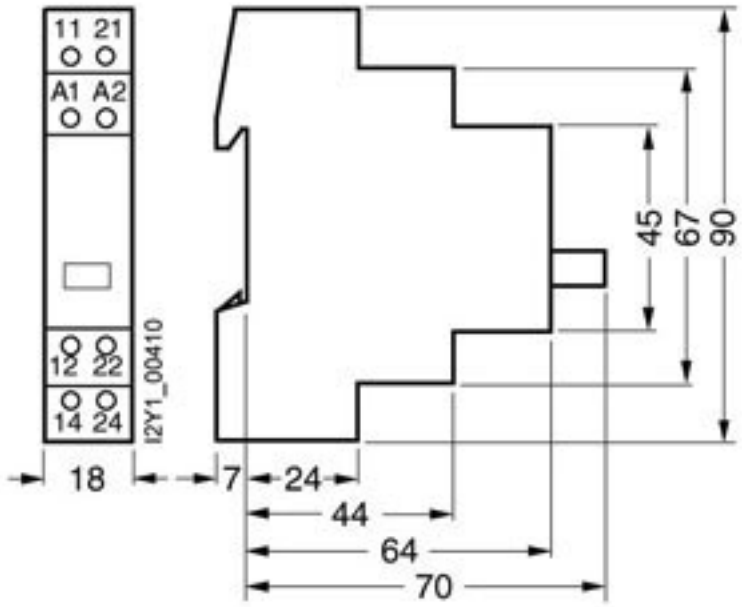

last modified: 05.05.2015

Changes preserved
© Copyright Siemens AG