SIEMENS

Data sheet 5SV3316-6



Figure similar

RES.CUR.OP.CIRCUIT BREAKER TYPE A 63A 1+N-POLE 30MA 230V 2MW

Model		
product brand name		SENTRON
Product designation		RCCB
Design of the product		Instantaneous
General technical data		
Number of poles		2
Size of installation devices / acc. to DIN 43880		1
Protection against electrical shock		Finger and back-of-hand safe
Short-circuit current rating	kA	10
circuit-breaker / Design		5SV3
Mechanical service life (switching cycles) / typical		10 000
Overvoltage category		III
Supply voltage		
Supply voltage		
• with AC / Rated value	V	230
• for testing equipment / minimum	V	195
Protection class		
Protection class IP		IP20, if the distribution board is installed, with connected conductors
Switching capacity		
Switching capacity current		
• acc. to EN 60898 / Rated value	kA	0.8
Dissipation		

Changes preserved
© Copyright Siemens AG

Active power loss		
• for rated value of the current / with AC / in hot operating state / per pole	W	5.3

Electricity

Tripping residual current / Rated value	mA	30
rated current In / IEC, DIN/VDE / at 40 Cel	A	63
Type of fault current		A
Current / with AC / Rated value	A	63
Surge current resistance / Rated value	kA	1

Product details

Product property		
• halogen-free		Yes
• silicon-free		Yes
Product expansion / can be installed / supplementary devices		Yes

Number

Number of test cycles / for environmental testing / acc. to IEC 60068-2-30		28

Connections

Connectable conductor cross-section / stranded		
• minimum	mm²	0.75
• maximum	mm²	35
Connectable conductor cross-section / solid		
• minimum	mm²	0.75
• maximum	mm²	35
Tightening torque / with screw-type terminals		
• minimum	N·m	2.5
• maximum	N·m	3
Position / of power supply cord		top or bottom

Mechanical Design

Height	mm	90
Width	mm	36
Depth	mm	70
mounting position		any
Installation depth	mm	70
Number of width units		2
Mounting type		DIN rail (REG)
Net weight	g	200

Environmental conditions

Ambient temperature		
• minimum	°C	-25

Changes preserved
© Copyright Siemens AG

• maximum	°C	45
• during storage / minimum permissible	°C	-40
• during storage / maximum permissible	°C	75

Certificates

Equipment marking		
• acc. to DIN EN 61346-2		F
• acc. to DIN EN 81346-2		F

General Product Approval

CCC IMQ ÖVE GOST VDE EAC

General Product Approval	Declaration of Conformity
other	CE EG-Konf.

Further information

Information- and Downloadcenter (Catalogs, Brochures,…)
http://www.siemens.com/lowvoltage/catalogs

Industry Mall (Online ordering system)
https://eb.automation.siemens.com/mall/en/WW/Catalog/Product/5SV33166

Service&Support (Manuals, Certificates, Characteristics, FAQs,...)
http://support.automation.siemens.com/WW/view/en/5SV33166/all

Image database (product images, 2D dimension drawings, 3D models, device circuit diagrams, ...)
http://www.automation.siemens.com/bilddb/cax_en.aspx?mlfb=5SV33166

CAx-Online-Generator
http://www.siemens.com/cax

Tender specifications
http://ausschreibungstexte.siemens.com/tiplv

Changes preserved
© Copyright Siemens AG

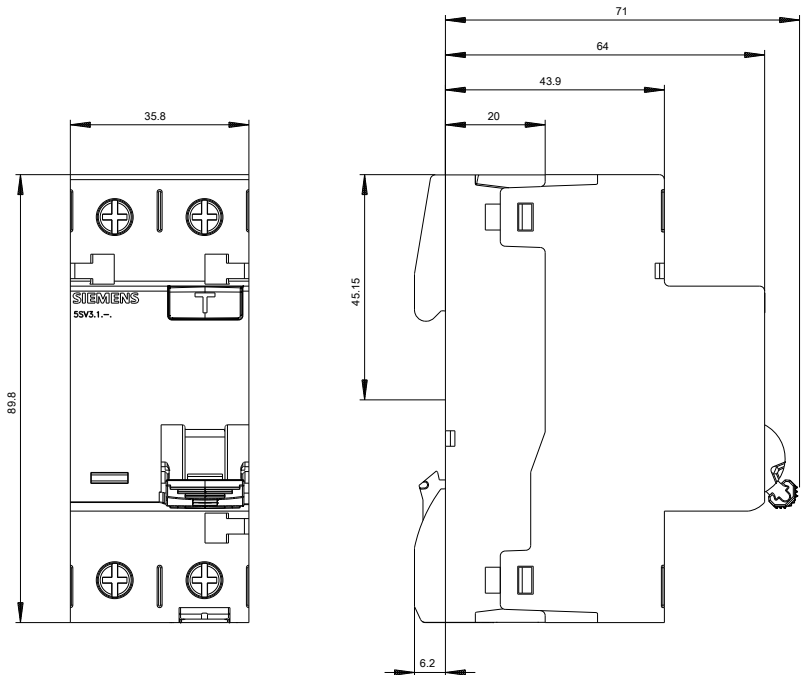

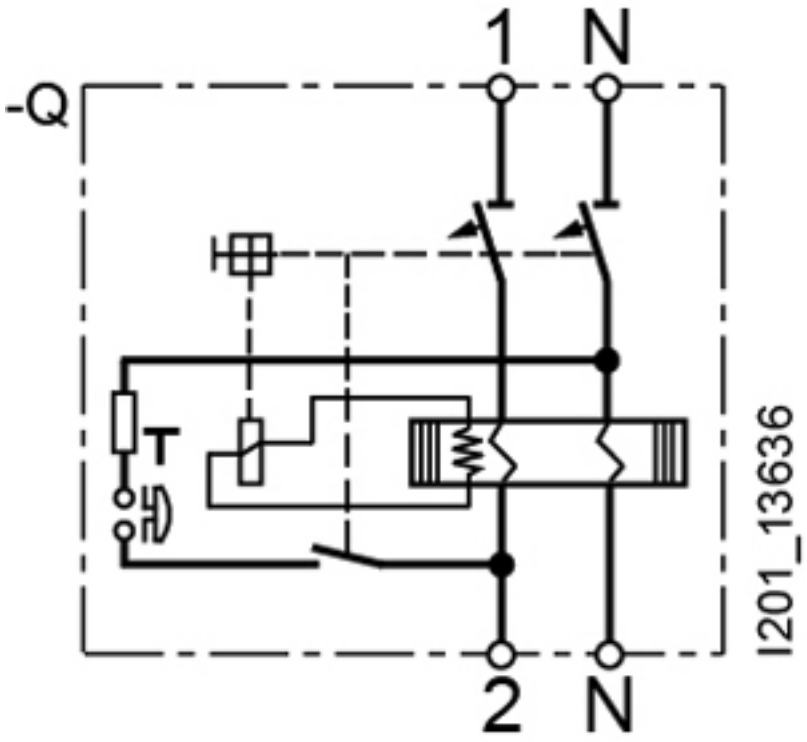

last modified: 05.05.2015

Changes preserved
© Copyright Siemens AG