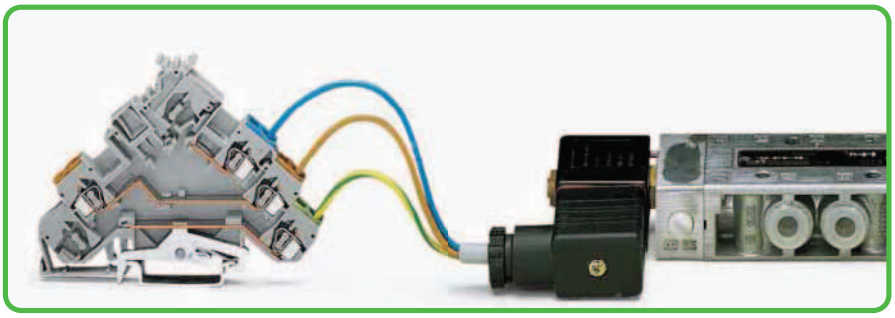

Actuator terminal block paired with a magnetic valve with ground connection

* AWG 12: THHN, THWN

❶ 400 V/250 V = rated voltage
6 kV/4 kV = rated surge voltage
3 = pollution degree
(also see Section 14)

❷ Electrical ratings are given by the fuse plug or empty component plug housing.

❸ Strip length, see packaging or instructions.

❹ For empty component plug housings, see interface modules
x=12 mm/0.472 in
For fuse plugs, see page 230
x = 15.5 mm/0.61 in
y = 10 mm/0.394 in

❺ See application notes for:
Insulation stop, page 199



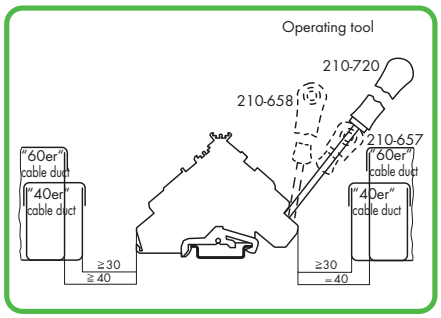

Min. mounting distance – terminal blocks to cable duct

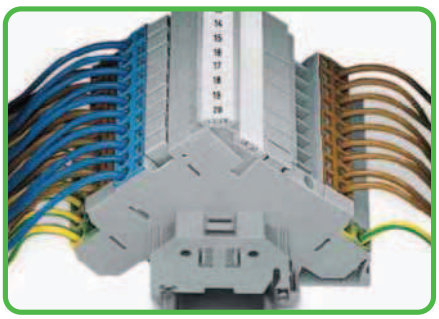

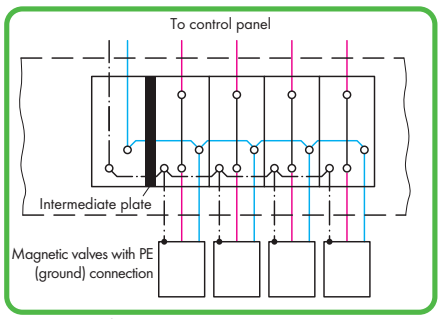

Power supply from control panel side

280 Series Accessories

Appropriate marking system:
WMB (see Section 13)

End and intermediate plate, 1 mm thick, for quadruple-deck terminal blocks			
	orange	**280-323**	100 (4x25)
	gray	**280-320**	100 (4x25)
Insulation stop, ❺ 5 pcs/strip, 0.08 - 0.2 mm² "s" (0.14 mm² "f-st")			
	white	**280-470**	200 (8x25)
Insulation stop, ❺ 5 pcs/strip, 0.25 - 0.5 mm²			
	light gray	**280-471**	200 (8x25)
Insulation stop, ❺ 5 pcs/strip, 0.75 - 1 mm²			
	dark gray	**280-472**	200 (8x25)
Adjacent jumper, insulated, $I_N = I_N$ terminal block			
	gray	**280-402**	200 (8x25)
Screwless end stop, for DIN 35 rail, 6 mm wide			
	gray	**249-116**	100 (4x25)
Screwless end stop, for DIN 35 rail, 10 mm wide			
	gray	**249-117**	50 (2x25)

Actuator LED Terminal Blocks
Actuator LED Terminal Blocks with Ground Connection 2.5 mm²
280 Series

CAGE CLAMP®

0.08 - 2.5 mm²	AWG 28 - 12 *
24 VDC ❶	24 V, 15 A
20 A	300 V, 15 A
Terminal block width 5 mm / 0.197 in	
8 - 9 mm / 0.33 in ❷	

0.08 - 2.5 mm²	AWG 28 - 12 *
24 VDC ❶	24 V, 15 A
20 A	300 V, 15 A
Terminal block width 5 mm / 0.197 in	
8 - 9 mm / 0.33 in ❷	

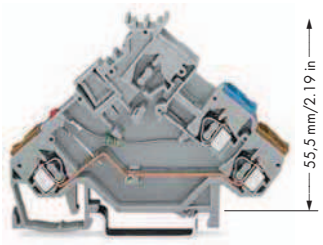



Circuit I Circuit II

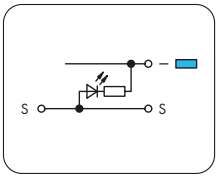

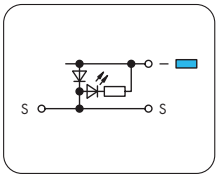

Circuit I Circuit II

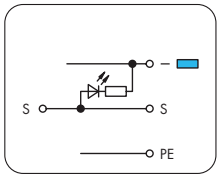

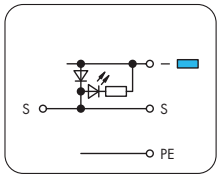

* AWG 12: THHN, THWN

❶ Other voltages upon request.

❷ Strip length, see packaging or instructions.

❸ See application notes for:
Insulation stop, page 199

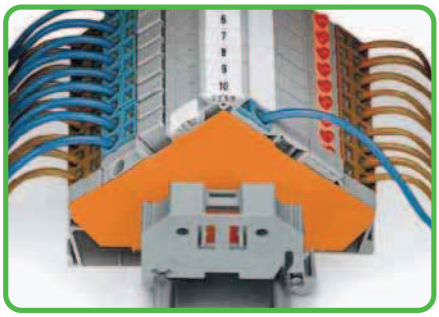

	Item No.	Pack. Unit
Actuator LED terminal block, additional LED, 24 VDC, LED power consumption: 4.8 mA		
Circuit I	**280-562/281-434**	50
Actuator LED terminal block, with recovery diode 1N4007, red LED, 24 VDC, LED power consumption: 4.8 mA		
Circuit II	**280-562/281-420**	50

	Item No.	Pack. Unit
Actuator LED terminal block with ground connection, additional LED, 24 VDC, LED power consumption: 4.8 mA		
Circuit I	**280-572/281-434**	50
Actuator LED terminal block with ground connection, with recovery diode 1N4007, additional LED, 24 VDC, LED power consumption: 4.8 mA		
Circuit II	**280-572/281-420**	50

Item-Specific Accessories

End and intermediate plate, 1 mm thick,



for triple-deck terminal blocks		
orange	**280-321**	100 (4x25)
gray	**280-319**	100 (4x25)

Item-Specific Accessories

End and intermediate plate, 1 mm thick,



for quadruple-deck terminal blocks		
orange	**280-323**	100 (4x25)
gray	**280-320**	100 (4x25)

280 Series Accessories

Appropriate marking system:
WMB (see Section 13)

Insulation stop, ❸



5 pcs/strip,		
0.08 - 0.2 mm² "s" (0.14 mm² "f-st")		
white	**280-470**	200 (8x25)

Adjacent jumper, insulated,



$I_N = I_N$ terminal block		
gray	**280-402**	200 (8x25)

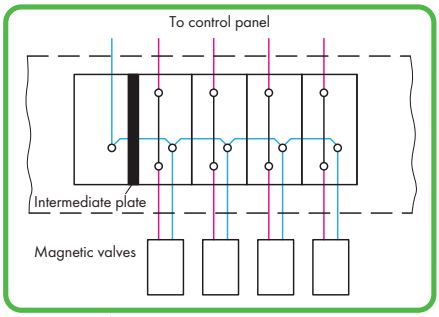

Power supply from control panel side

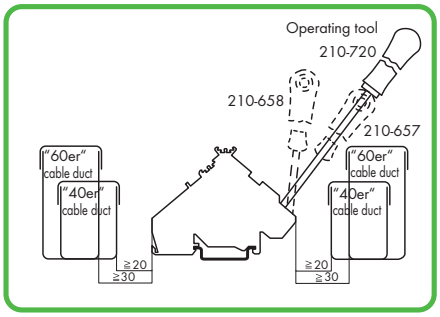

Min. mounting distance – terminal blocks to cable duct

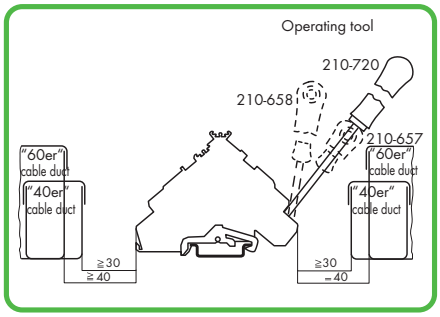

Min. mounting distance – terminal blocks to cable duct

For list of approvals and user guide, see pages 634 to 637.

Actuator Terminal Blocks 2.5 mm² for Actuators with Shield Connection and Actuators with Shield Conductor Through Contact for Thermocouples, etc. – 280 Series

0.08 - 2.5 mm² / 400 V/6 kV/3 ❶ / I_N 20 A	AWG 28 - 12 * / 300 V, 15 A / 300 V, 15 A
Terminal block width 5 mm / 0.197 in 8 - 9 mm / 0.33 in ❷	
0.08 - 2.5 mm² / 400 V/6 kV/3 ❶ / I_N 20 A	AWG 28 - 12 * / 300 V, 15 A
Terminal block width 5 mm / 0.197 in 8 - 9 mm / 0.33 in ❷	





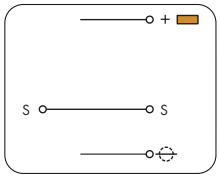

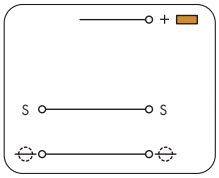

Item No.	Pack. Unit
Actuator terminal block with shield connection	
280-585	50
Item-specific accessories, see page 242	

Item No.	Pack. Unit
Actuator terminal block with shield conductor through contact	
280-583	50
Item-specific accessories, see page 242	

* AWG 12: THHN, THWN

❶ 400 V = rated voltage
6 kV = rated surge voltage
3 = pollution degree
(also see Section 14)

❷ Strip length, see packaging or instructions.



Green-yellow clamping unit = shield contact





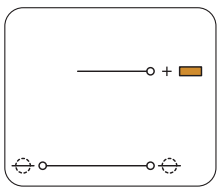

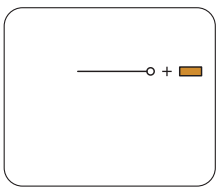

Item No.	Pack. Unit
Actuator supply terminal block with shield connection, power supply from control panel side, with end plate	
280-586	50
Item-specific accessories, see page 242	

Item No.	Pack. Unit
Actuator supply terminal block, power supply from control panel side, with end plate, for actuators with shield conductor through contact	
280-515	20
Item-specific accessories, see page 242	



White clamping unit = shield conductor through contact

For list of approvals and user guide, see pages 634 to 637.

Diode Terminal Blocks and LED Terminal Blocks 1.5 mm²
279 Series

0.08 - 1.5 mm² | AWG 28 - 16 **U_N 250 V, U_{RM} 1000 V** **1N4007 - 0.5 A continuous current** **Terminal block width 4 mm / 0.157 in** **8 - 9 mm / 0.33 in** ❶	**0.08 - 1.5 mm² | AWG 28 - 16** **U_N 250 V, U_{RM} 1000 V** **1N4007 - 0.5 A continuous current** **Terminal block width 4 mm / 0.157 in** **8 - 9 mm / 0.33 in** ❶	**0.08 - 1.5 mm² | AWG 28 - 16** **24 VDC** **I_F 0.025 A max.** **Terminal block width 4 mm / 0.157 in** **8 - 9 mm / 0.33 in** ❶

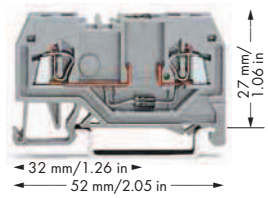

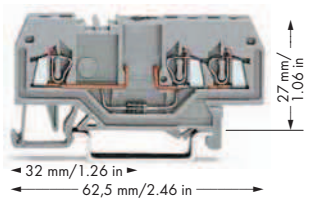

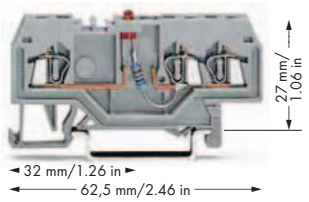

Circuit I Circuit II

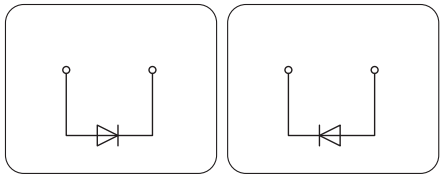

Circuit I Circuit II

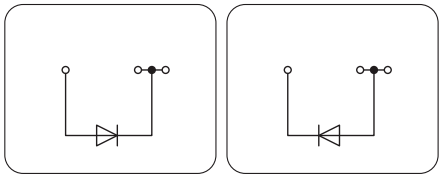

Circuit I Circuit II

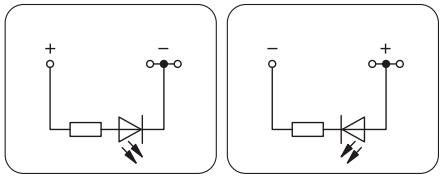

	Item No.	Pack. Unit
2-conductor diode terminal block with 1N4007		
diode, gray		
Circuit I	**279-915/281-410**	100
Circuit II	**279-915/281-411**	100

	Item No.	Pack. Unit
3-conductor diode terminal block with 1N4007		
diode, gray		
Circuit I	**279-673/281-410**	100
Circuit II	**279-673/281-411**	100

	Item No.	Pack. Unit
3-conductor LED terminal block with red LED,		
24 VDC, gray		
Circuit I	**279-674/281-434**	100
Circuit II	**279-674/281-413**	100

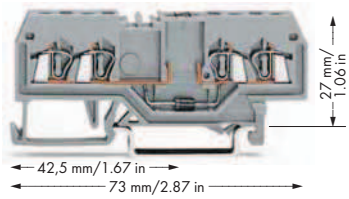

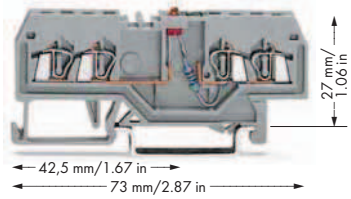

Circuit I Circuit II

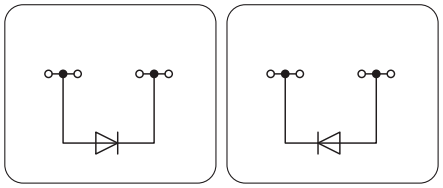

Circuit I Circuit II

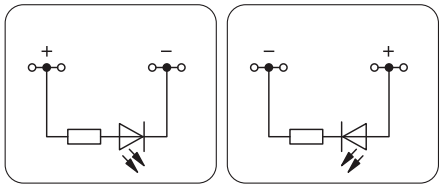

Through terminal blocks with same profile,	**4-conductor diode terminal block with 1N4007**	**4-conductor LED terminal block with red LED,**
see page 162	**diode,** gray	24 VDC, gray
	Circuit I **279-815/281-410** 100	Circuit I **279-809/281-434** 100
	Circuit II **279-815/281-411** 100	Circuit II **279-809/281-413** 100

For list of approvals and user guide, see pages 634 to 637.

Circuit Configuration Examples
Diode Terminal Blocks and LED Terminal Blocks

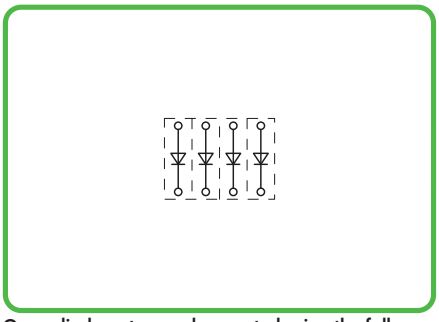

Open diode gates can be created using the following terminal blocks:
279-915/281-410 or
279-915/281-411

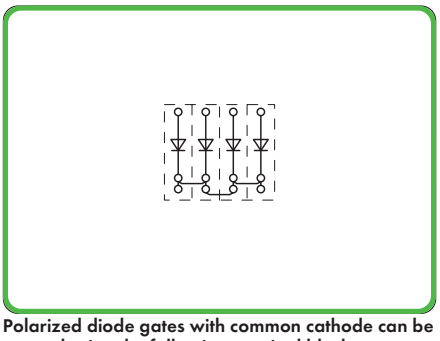

Polarized diode gates with common cathode can be created using the following terminal blocks:
279-673/281-410 or
279-673/281-411

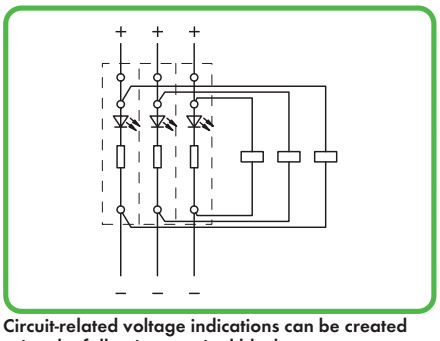

Circuit-related voltage indications can be created using the following terminal blocks:
279-674/281-434 or
279-674/281-413

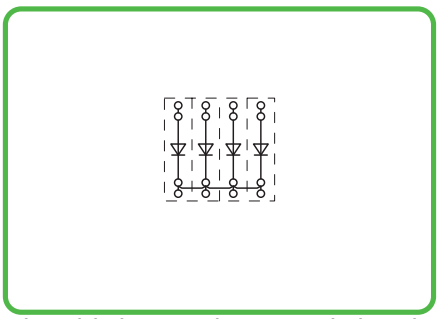

Polarized diode gates with common cathode can be created using the following terminal blocks:
279-815/281-410 or
279-815/281-411

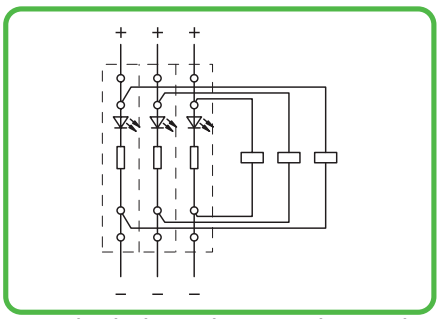

Circuit-related voltage indications can be created using the following terminal blocks:
279-809/281-434 or
279-809/281-413

❶ Strip length, see packaging or instructions.

279 Series Accessories

Appropriate marking system:
WMB (see Section 13)

Insulation stop,			
	5 pcs/strip,		
	0.08 - 0.2 mm² "s" (0.14 mm² "f-st")		
	white	**279-470**	200 (8x25)
Insulation stop,			
	5 pcs/strip,		
	0.25 mm²		
	dark gray	**279-471**	200 (8x25)
Comb-style jumper bar, insulated,			
	I_N = I_N terminal block		
	2-way	**279-482**	200 (8x25)
	3-way	**279-483**	200 (8x25)
Comb-style jumper bar, insulated,			
	I_N = I_N terminal block		
	10-way	**279-490**	50 (2x25)
Alternate comb-style jumper bar,			
	insulated,		
	I_N = I_N terminal block		
	2-way	**279-492**	200 (8x25)
Operating tool, of insulating material			
	2-way	**279-432**	1
	3-way	**279-433**	1
Operating tool, of insulating material			
	10-way	**279-440**	1

Diode Terminal Blocks and LED Terminal Blocks 2.5 mm²
280 Series

0.08 - 2.5 mm² | AWG 28 - 14 U_N 250 V, U_{RM} 1000 V 1N4007 - 0.5 A continuous current Terminal block width 5 mm / 0.197 in 8 - 9 mm / 0.33 in ❶	0.08 - 2.5 mm² | AWG 28 - 14 U_N 250 V, U_{RM} 1000 V 1N4007 - 0.5 A continuous current Terminal block width 5 mm / 0.197 in 8 - 9 mm / 0.33 in ❶	0.08 - 2.5 mm² | AWG 28 - 14 24 VDC I_F 0.025 A max. Terminal block width 5 mm / 0.197 in 8 - 9 mm / 0.33 in ❶

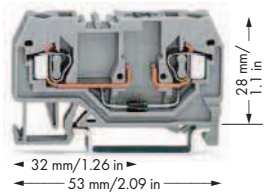

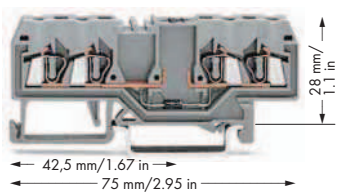

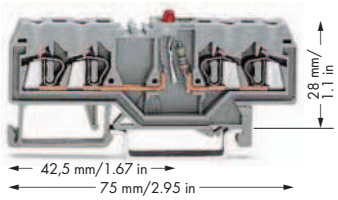

Circuit I Circuit II

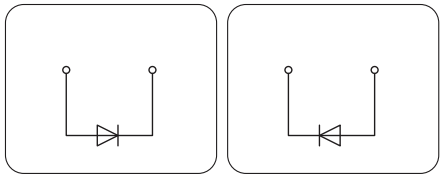

Circuit I Circuit II

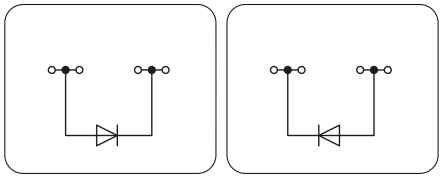

Circuit I Circuit II

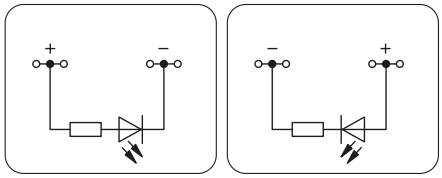

	Item No.	Pack. Unit
2-conductor diode terminal block with 1N4007		
diode, gray		
Circuit I	**280-915/281-410**	100
Circuit II	**280-915/281-411**	100

	Item No.	Pack. Unit
4-conductor diode terminal block with 1N4007		
diode, gray		
Circuit I	**280-815/281-410**	100
Circuit II	**280-815/281-411**	100

	Item No.	Pack. Unit
4-conductor LED terminal block with red LED,		
24 VDC, gray		
Circuit I	**280-809/281-434**	100
Circuit II	**280-809/281-413**	100

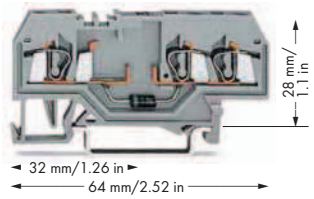

Circuit I Circuit II

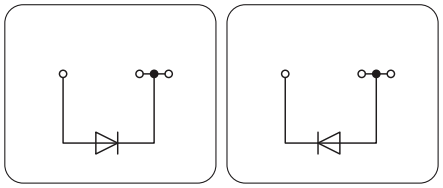

	Item No.	Pack. Unit
Through terminal blocks with same profile,		
see page 164		

	Item No.	Pack. Unit
3-conductor diode terminal block with 1N4007		
diode, gray		
Circuit I	**280-673/281-410**	100
Circuit II	**280-673/281-411**	100

For list of approvals and user guide, see pages 634 to 637.

Circuit Configuration Examples
Diode Terminal Blocks and LED Terminal Blocks

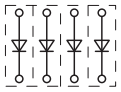

Open diode gates can be created using the following terminal blocks:
280-915/281-410 or
280-915/281-411

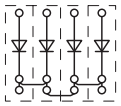

Polarized diode gates with common cathode can be created using the following terminal blocks:
280-673/281-410 or
280-673/281-411

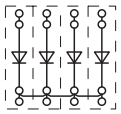

Polarized diode gates with common cathode can be created using the following terminal blocks:
280-815/281-410 or
280-815/281-411

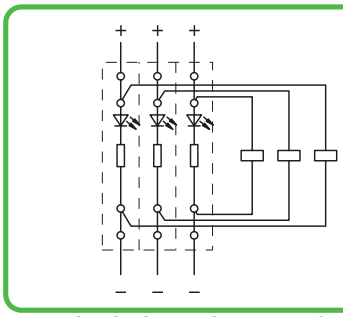

Circuit-related voltage indications can be created using the following terminal blocks:
280-809/281-434 or
280-809/281-413

❶ Strip length, see packaging or instructions.

280 Series Accessories

Appropriate marking system:
WMB (see Section 13)

Insulation stop,			
	5 pcs/strip,		
	0.08 - 0.2 mm² "s" (0.14 mm² "f-st")		
	white	**280-470**	200 (8x25)
Insulation stop,			
	5 pcs/strip,		
	0.25 - 0.5 mm²		
	light gray	**280-471**	200 (8x25)
Insulation stop,			
	5 pcs/strip,		
	0.75 - 1 mm²		
	dark gray	**280-472**	200 (8x25)
Comb-style jumper bar, insulated,			
	I_N = I_N terminal block		
	2-way	**280-482**	200 (8x25)
	3-way	**280-483**	200 (8x25)
Comb-style jumper bar, insulated,			
	I_N = I_N terminal block		
	10-way	**280-490**	50 (2x25)
Alternate comb-style jumper bar,			
	insulated,		
	I_N = I_N terminal block		
	2-way	**280-492**	200 (8x25)
Operating tool, of insulating material			
	2-way	**280-432**	1
	3-way	**280-433**	1
Operating tool, of insulating material			
	10-way	**280-440**	1
Wire commoning chain, 50 connections,			
	insulated, I_N 8 A		
	black	**210-103**	1
Wire commoning chain, 50 connections,			
	insulated, I_N 8 A		
	blue	**210-123**	1

Diode Terminal Blocks 4 mm²
281 Series

0.08 - 4 mm² | AWG 28 - 12 **U_N 250 V, U_{RM} 1000 V** **Terminal block width 6 mm / 0.236 in** **9 - 10 mm / 0.37 in** ❶	**0.08 - 4 mm² | AWG 28 - 12** **U_N 250 V, U_{RM} 1000 V** **Terminal block width 6 mm / 0.236 in** **9 - 10 mm / 0.37 in** ❶	**0.08 - 4 mm² | AWG 28 - 12** **U_N 250 V, U_{RM} 1000 V** **Terminal block width 6 mm / 0.236 in** **9 - 10 mm / 0.37 in** ❶

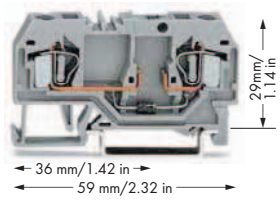

Circuit I Circuit II

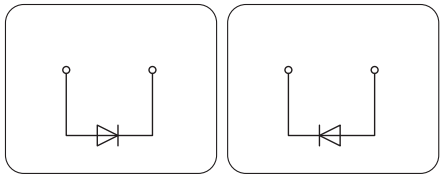

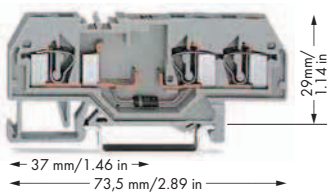

Circuit I Circuit II

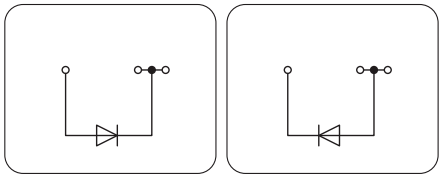

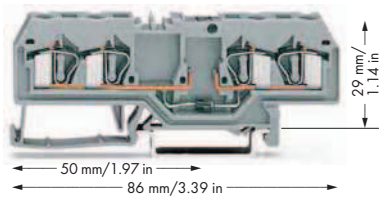

Circuit I Circuit II

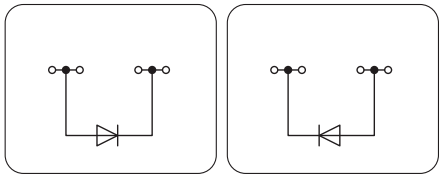

	Item No.	Pack. Unit
2-conductor diode terminal block with 1N4007		
diode, 0.5 A continuous current, gray		
Circuit I	**281-915/281-410**	50
Circuit II	**281-915/281-411**	50
2-conductor diode terminal block with 1N5408		
diode, 1.5 A continuous current, gray		
Circuit I	**281-915/281-400**	50
Circuit II	**281-915/281-401**	50
Other terminal blocks with the same profile:		
Through	**281-901**	Page 170

	Item No.	Pack. Unit
3-conductor diode terminal block with 1N4007		
diode, 0.5 A continuous current, gray		
Circuit I	**281-673/281-410**	50
Circuit II	**281-673/281-411**	50
3-conductor diode terminal block with 1N5408		
diode, 1.5 A continuous current, gray		
Circuit I	**281-673/281-400**	50
Circuit II	**281-673/281-401**	50
Other terminal blocks with the same profile:		
Through	**281-681**	Page 170

	Item No.	Pack. Unit
4-conductor diode terminal block with 1N4007		
diode, 0.5 A continuous current, gray		
Circuit I	**281-665/281-410**	50
Circuit II	**281-665/281-411**	50
4-conductor diode terminal block with 1N5408		
diode, 1.5 A continuous current, gray		
Circuit I	**281-665/281-400**	50
Circuit II	**281-665/281-401**	50
Other terminal blocks with the same profile:		
Through	**281-652**	Page 170

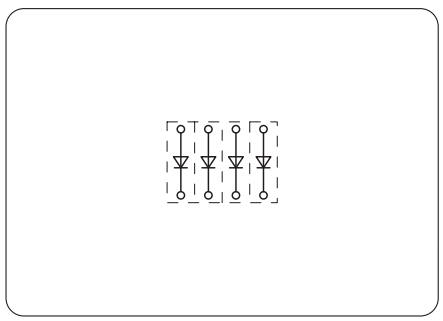

Open diode gate

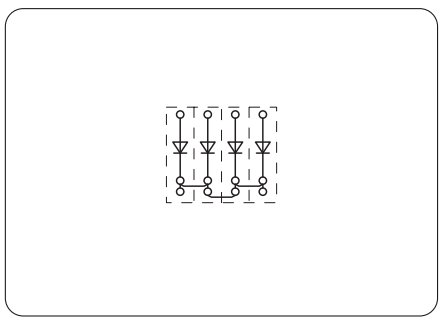

Polarized diode gate, common cathode

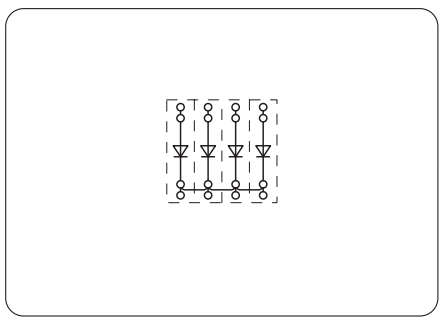

Polarized diode gate, common cathode

For list of approvals and user guide, see pages 634 to 637.

Technical Information for Variable Resistor Terminal Blocks

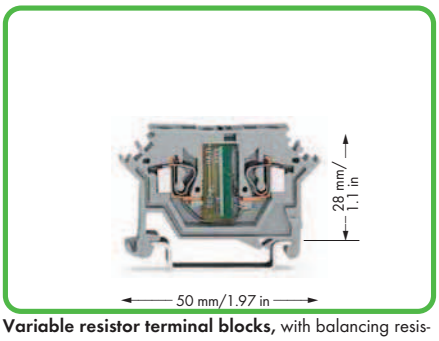

Variable resistor terminal blocks, with balancing resistance
0.5 Ohm – 20 Ohm, 0.75 W
gray 280-615/281-412 ❷

0.5 Ohm – 20 Ohm, 0.75 W
blue 280-645/281-412 ❷❸

20 Ohm – 1 kOhm, 0.75 W
gray 280-615/281-428 ❷

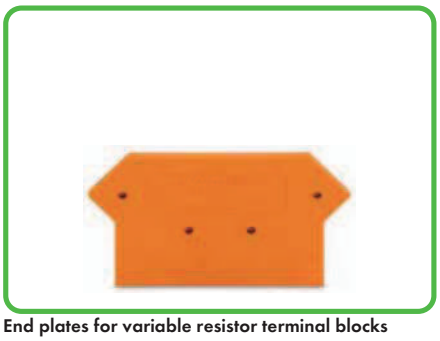

End plates for variable resistor terminal blocks

orange	280-331	100 (4x25)
gray	280-330	100 (4x25)

For terminal blocks with side marking (e.g., 280-601), see www.wagocatalog.com

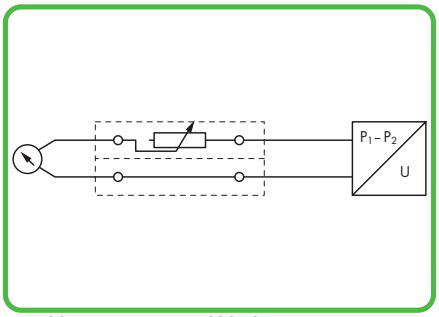

Variable resistor terminal blocks
Trimming circuit for differential pressure

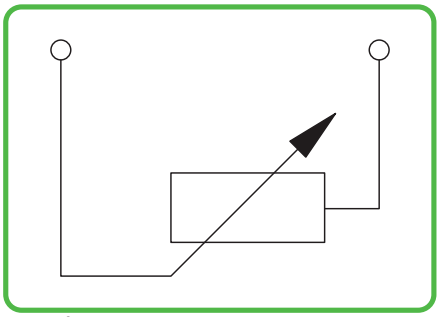

Circuit diagram
Variable resistor terminal block with balancing resistance

❷ Other resistors on request

❸ Suitable for Ex i applications in connection with the 280-331 intermediate plate

❶ Strip length, see packaging or instructions.

281 Series Accessories

Appropriate marking system:
WMB (see Section 13)

Insulation stop,			
	5 pcs/strip,		
	0.08 - 0.2 mm² "s" (0.14 mm² "f-st")		
	white	**281-470**	200 (8x25)
Insulation stop,			
	5 pcs/strip,		
	0.25 - 0.5 mm²		
	light gray	**281-471**	200 (8x25)
Insulation stop,			
	5 pcs/strip,		
	0.25 - 1.5 mm²		
	dark gray	**281-472**	200 (8x25)
Comb-style jumper bar, insulated,			
	$I_N = I_N$ terminal block		
	2-way	**281-482**	100 (4x25)
	3-way	**281-483**	100 (4x25)
	5-way	**281-485**	100 (4x25)
	10-way	**281-490**	50 (2x25)
Alternate comb-style jumper bar,			
	insulated,		
	$I_N = I_N$ terminal block		
	2-way	**281-492**	100 (4x25)
Operating tool, of insulating material			
	2-way	**280-432**	1
	3-way	**280-433**	1
	5-way	**281-440**	1
Wire commoning chain, 50 connections,			
	insulated, I_N 8 A		
	black	**210-103**	1
Wire commoning chain, 50 connections,			
	insulated, I_N 8 A		
	blue	**210-123**	1