SIEMENS

Data sheet 8WD4308-0EE

SIGNAL COLUMN, DIAMETER 70 MM ACCESSORIES
PIPE, 150 MM



General technical data:		
product brand name		SIRIUS
Equipment marking acc. to DIN EN 61346-2		U

Mechanical data:		
Length of the mounting pipe	mm	150
Outer diameter of the signal column element	mm	70

Ambient conditions:		
Height	mm	150
Width	mm	25

Certificates/ approvals:

General Product Approval	EMC	Shipping Approval

UL C-TICK ABS DNV PRS

Shipping Approval

RINA

Further information

Changes preserved
© Copyright Siemens AG

Information- and Downloadcenter (Catalogs, Brochures,…)
http://www.siemens.com/industrial-controls/catalogs

Industry Mall (Online ordering system)
http://www.siemens.com/industrymall

Cax online generator
http://support.automation.siemens.com/WW/CAXorder/default.aspx?lang=en&mlfb=8WD43080EE

Service&Support (Manuals, Certificates, Characteristics, FAQs,...)
https://support.industry.siemens.com/cs/ww/en/ps/8WD43080EE

Image database (product images, 2D dimension drawings, 3D models, device circuit diagrams, EPLAN macros, ...)
http://www.automation.siemens.com/bilddb/cax_de.aspx?mlfb=8WD43080EE&lang=en

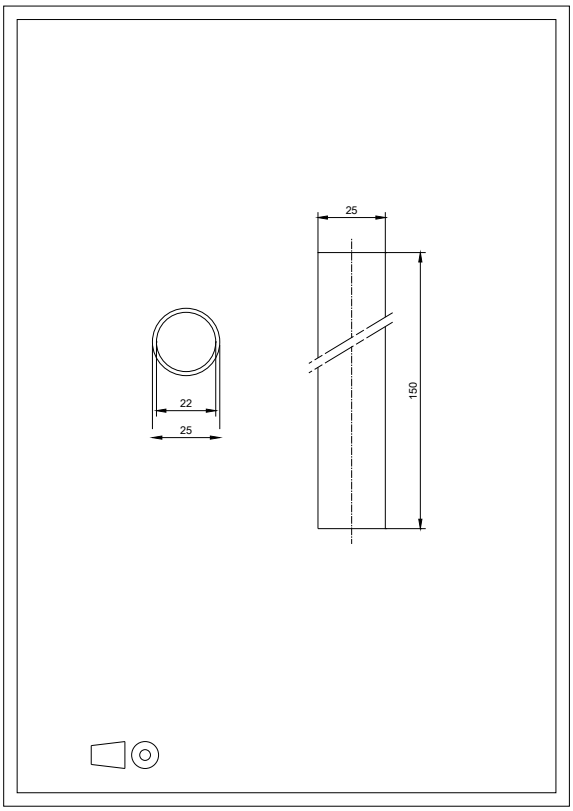

last modified: 23.04.2015

Changes preserved
© Copyright Siemens AG