0.08 – 4 mm² / 250 V ❶/400 V ❷/4 kV/3 ❸ / 32 A / AWG 28 – 12 / 600 V, 20 A	0.08 – 4 mm² / 250 V ❶/400 V ❷/4 kV/3 ❸ / 32 A / AWG 28 – 12 / 600 V, 20 A	0.08 – 4 mm² / 400 V/6 kV/3 ❸ / 26 A / AWG 28 – 12
Terminal block width 6 mm / 0.236 in	Terminal block width 6 mm / 0.236 in	Terminal block width 6 mm / 0.236 in
9 – 10 mm / 0.37 in	9 – 10 mm / 0.37 in	9 – 10 mm / 0.37 in
* GL BV LR	* GL BV LR	* GL BV LR

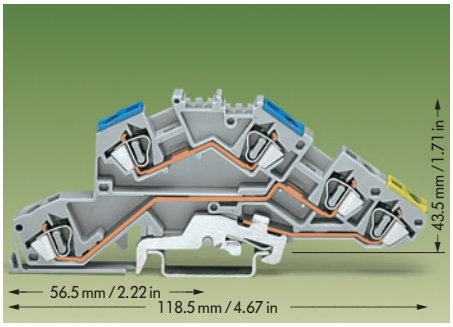

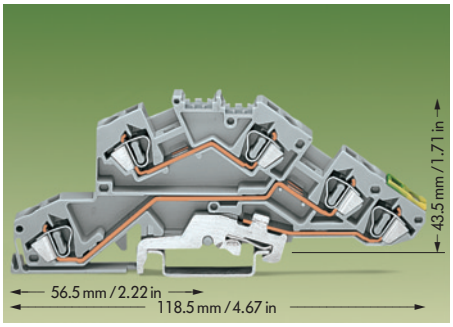

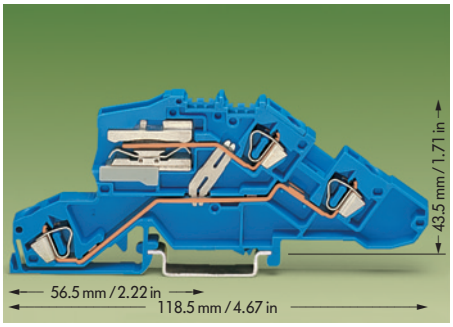

	Item-No.	Pack.-unit pcs
grey		
N/L/PE	**777-646**	50
Appropriate marking system	**WMB/WSB/WCB/WFB**	
1.5 mm / 0.059 in thick		
orange	**777-325**	100 (4 x 25)
I_N 32 A, grey	**281-402**	200 (8 x 25)
I_N 32 A, grey	**281-409**	100 (4 x 25)
I_N 32 A		
	781-452	100 (4 x 25)
	781-453	100 (4 x 25)
	781-454	100 (4 x 25)
	781-455	50 (2 x 25)
	781-456	50 (2 x 25)
12 mm / 0.472 in wide	**783-607**	25
1.5 mm / 0.059 in thick	**783-317**	100 (4 x 25)

	Item-No.	Pack.-unit pcs
grey		
L/L/PE	**777-645**	50
Appropriate marking system	**WMB/WSB/WCB/WFB**	
1.5 mm / 0.059 in thick		
orange	**777-325**	100 (4 x 25)
I_N 32 A, grey	**281-402**	200 (8 x 25)
I_N 32 A, grey	**281-409**	100 (4 x 25)
I_N 32 A		
	781-452	100 (4 x 25)
	781-453	100 (4 x 25)
	781-454	100 (4 x 25)
	781-455	50 (2 x 25)
	781-456	50 (2 x 25)
12 mm / 0.472 in wide	**783-607**	25
1.5 mm / 0.059 in thick	**783-317**	100 (4 x 25)

	Item-No.	Pack.-unit pcs
with N-disconnect slide link, blue		
NT – N	**777-648**	50
Appropriate marking system	**WMB/WSB/WCB/WFB**	
1.5 mm / 0.059 in thick		
orange	**777-325**	100 (4 x 25)
1.5 mm / 0.059 in thick		
blue	**777-321**	100 (4 x 25)
8 mm / 0.315 in wide		
blue	**777-305**	25
I_N 140 A		
1000 mm / 3'3" long	**210-133**	1
1000 mm / 3'3" long	**777-303**	1
I_N 68 A		
12 mm / 0.472 in wide	**783-613**	25
1.5 mm / 0.059 in thick	**783-317**	100 (4 x 25)
	210-281	100 (2 x 50)
	209-105	50 (2 x 25)
I_N 32 A, grey	**281-402**	200 (8 x 25)
I_N 32 A, grey	**281-409**	100 (4 x 25)
I_N 32 A		
	781-452	100 (4 x 25)
	781-453	100 (4 x 25)
	781-454	100 (4 x 25)
	781-455	50 (2 x 25)
	781-456	50 (2 x 25)
orange	**777-300**	100 (4 x 25)