Fuse Disconnect Terminal Blocks, Fuse Plugs, Disconnect/Test Terminal Blocks . . . 280 to 282 Series

Fuse disconnect terminal blocks



Blown fuse indication by LED or neon lamp.

Commoning

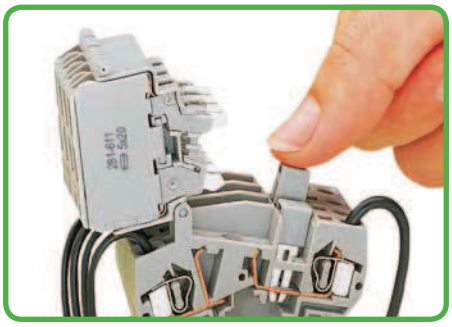

Distribution of current to several fuse-protected circuits via insulated touchproof jumpers.

Disconnect terminal blocks with disconnect tab

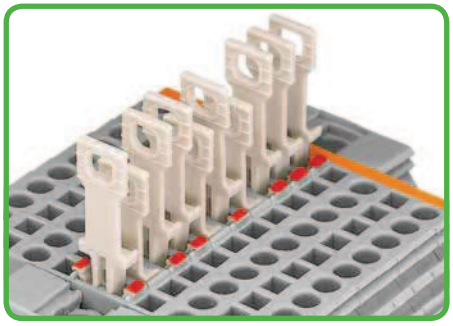

Disconnecting by pulling the disconnecting tab (red = disconnected).

Fuse replacement 1



Before replacing the fuse, pivot the fuse holder in the locked open position.

Testing

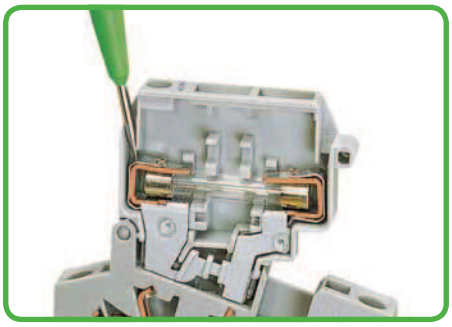

Voltage test, either at input or output with fuse holder in closed position (live).

Commoning

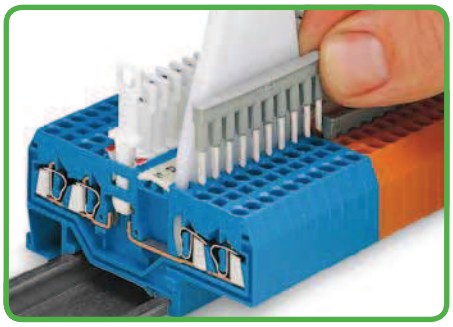

Commoning using comb-style jumper bars.

Fuse replacement 2

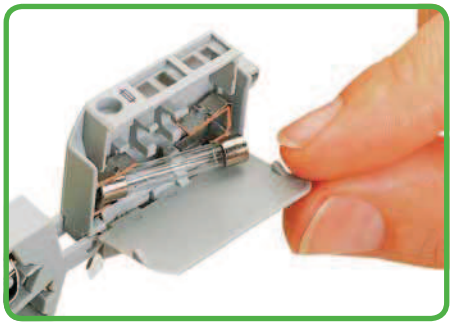

One end of the fuse is automatically ejected from the holder when opening the cover.

Testing

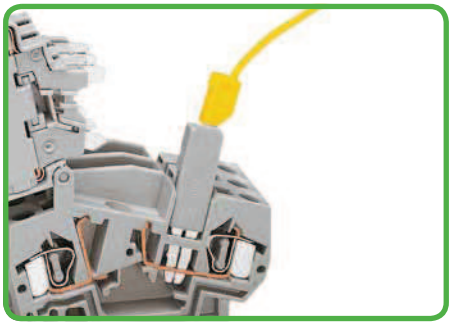

Voltage testing at input via 280-404 test plug adapter (shown) or 281-407 test plug.

Disconnect lock

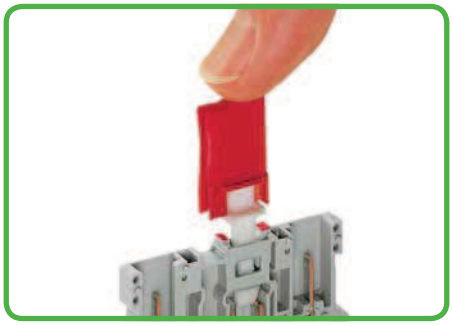

As soon as the disconnecting tab is in the disconnect position, it can be protected against unintentional reconnection by using the disconnect lock.

More fuse terminal blocks

Fuse plug

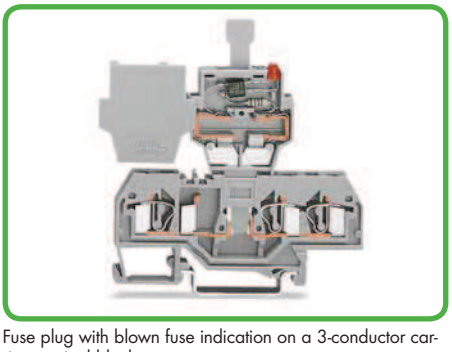

Fuse plug with blown fuse indication on a 3-conductor carrier terminal block.

Fuse terminal blocks for mini-automotive fuses

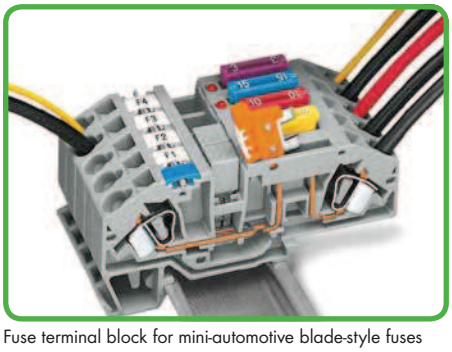

Fuse terminal block for mini-automotive blade-style fuses

More disconnect terminal blocks

Double-deck terminal blocks

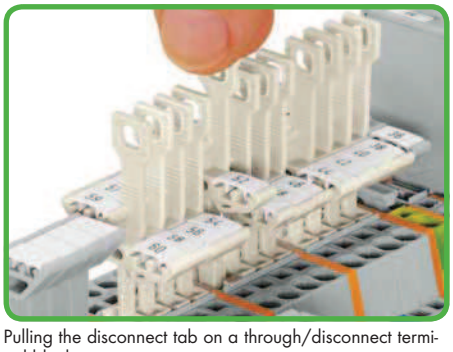

Pulling the disconnect tab on a through/disconnect terminal block.



CAGE CLAMP® clamps the following copper conductors:*

solid

Strip length, see packaging or instructions.



stranded



fine-stranded, also with tinned single strands

Disconnect terminal blocks with knife disconnect

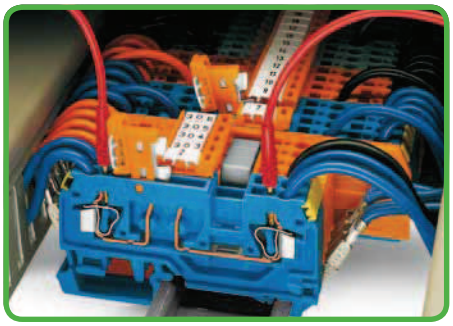

Disconnecting by knife disconnect.
Test slot for 2 mm or 2.3 mm Ø test plugs – direct contact to the current bar.

Longitudinal switching disconnect terminal blocks



Disconnecting by disconnect link.
4 mm Ø test slots are integrated.

Disconnect/test terminal blocks

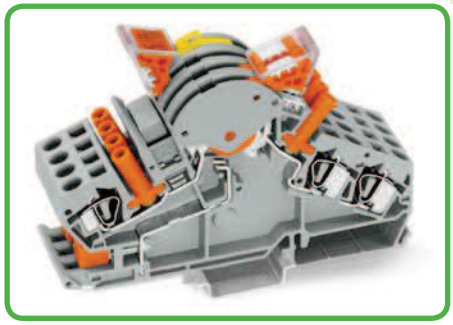

Example: current or voltage transformer circuits

Staggered jumpers

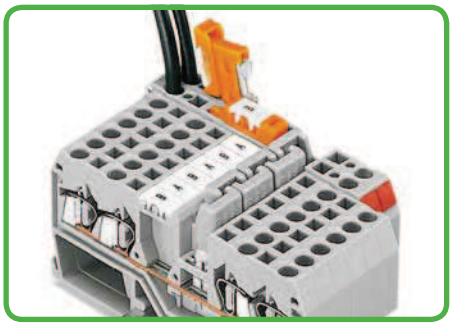

Staggered jumpers for sophisticated circuit requirements.
Push jumper down until fully inserted!

Commoning

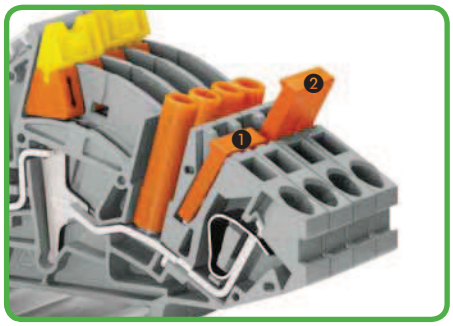

Longitudinal switching disconnect terminal blocks with jumpers
❶ commoned and ❷ isolated

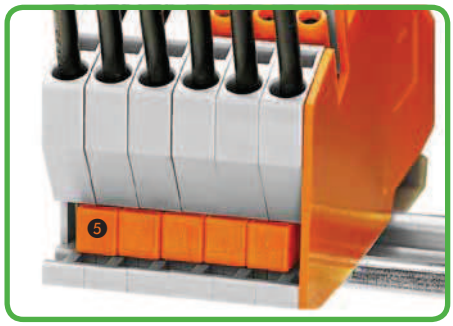

Terminal strip permanently prepared for current transformer circuits with short circuit jumpers ❺

Power supply

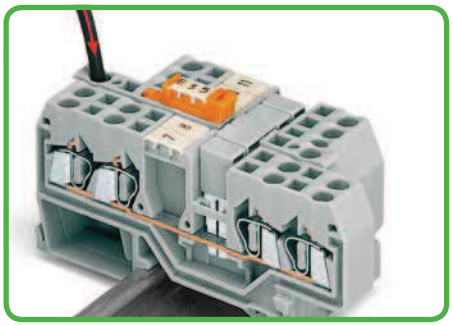

Power distribution using disconnect link in supply line. Disconnection of all outputs.

Transverse switching terminal blocks

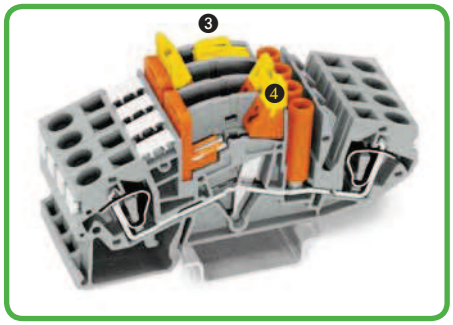

For current transformer circuits with
❸ lockout and
❹ coupling device.

Locking cover and lock-out seal

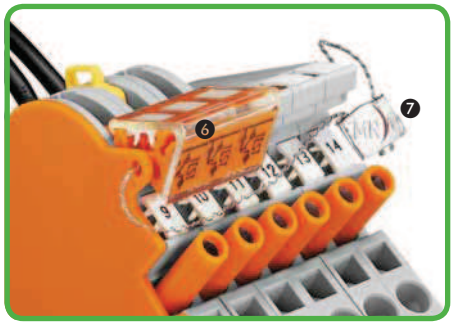

❻ Transparent locking cover (for 1- 4 disconnect links) can be snapped on for mechanical interlocking for multipole switching.
❼ A lock-out seal can be used on the disconnect link in notched position "I".

Disconnect terminal blocks 6 mm²/AWG 10

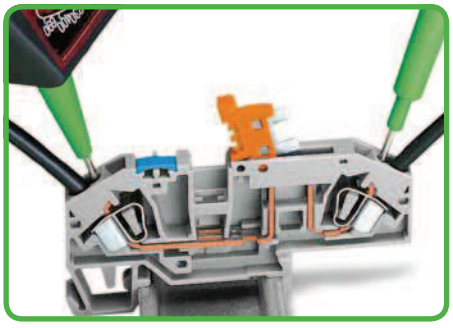

Testing a 6mm²/AWG 10 disconnect terminal block.

Switch positions

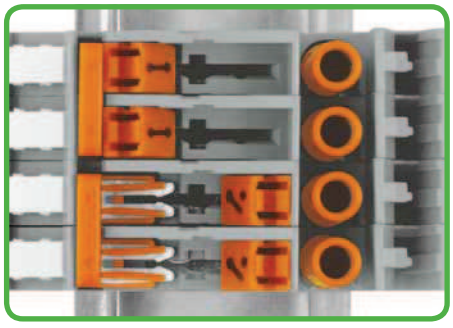

closed open

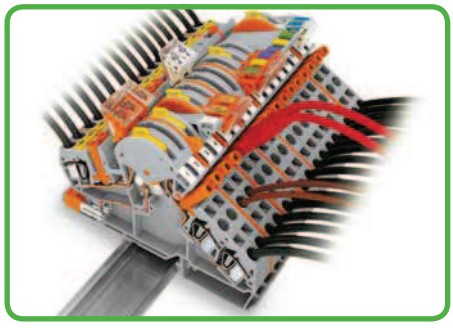

Transformer terminal strip (e.g., for meter boards or substations of the power supply industry).



fine-stranded, tip-bonded



fine-stranded with ferrule ❽ (gastight crimped)

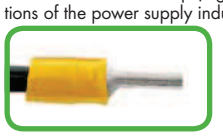

fine-stranded, with pin terminal (gastight crimped)

❽ With ferruled conductors, the max. conductor cross section accommodated is one size smaller than max. rating of terminal block.

WAGO®

Fuse Disconnect Terminal Blocks and Fuse Plugs
281 and 282 Series

0.08 - 4 mm² | **AWG 28 - 12**
❶ 800 V/8 kV/3 | **600 V, 10 A**
❶ I_N 10 A max. | **600 V, 15 A**
Terminal block 8 mm / 0.315 in
Terminal block width 10 mm / 0.394 in
9 - 10 mm / 0.37 in
❸ Approvals

❶ 250 V max.
❶ I_N 6.3 A max.
Plug width 6 mm / 0.236 in
❸ Approvals

0.2 - 6 mm² | **AWG 24 - 10**
❶ 400 V/6 kV/3
❶ I_N 30 A
Terminal block width 8 mm / 0.315 in
12 - 13 mm / 0.49 in
❸ Approvals

❶ Nominal voltage and current are given by the fuse or blown fuse indicator!

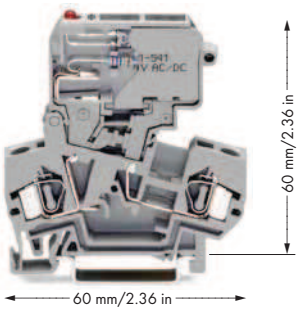

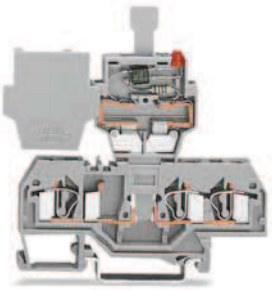

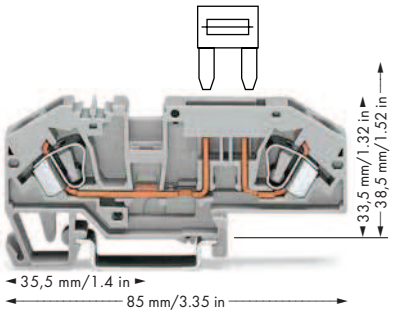

	Item No.	Pack. Unit
Fuse disconnect terminal block, gray		
for miniature metric fuses		
○ 5 x 20 mm	**281-611**	50
○ 5 x 20 mm	**281-611/281-541❶**	50
○ 5 x 20 mm	**281-611/281-417❷**	50
○ 5 x 25 mm	**281-612**	50
○ 5 x 25 mm	**281-612/281-541❶**	50
○ 5 x 25 mm	**281-612/281-417❷**	50
○ 5 x 30 mm	**281-622**	50
○	**281-622/281-541❶**	50
○	**281-622/281-417❷**	50
Terminal block width 10 mm/0.394 in		
○ 0.25" x 1"	**281-613**	50
○ 0.25" x 1"	**281-613/281-541❶**	50
○ 0.25" x 1"	**281-613/281-417❷**	50
○ 0.25" x 1.25"	**281-623**	50
○ 0.25" x 1.25"	**281-623/281-541❶**	50
○ 0.25" x 1.25"	**281-623/281-417❷**	50
with blown fuse indication by:		
❶ LED 15–30 V ≃		
❷ Neon lamp 230 V ≃		
Other voltages upon request.		
End and intermediate plate, 2.5 mm thick		
orange	**281-309**	100 (4x25)
gray	**281-311**	100 (4x25)

	Item No.	Pack. Unit
Fuse plug,		
6 mm wide, with pull-tab,		
for miniature metric fuses 5 x 20 mm and 5 x 25 mm,		
without blown fuse indication		
○	**281-511**	50
with LED		
○ 24 V AC/DC	**281-512/281-501**	50
with neon lamp		
○ 120 V AC/DC	**281-512/281-418**	50
○ 230 V AC/DC	**281-512/281-417**	50
Carrier blocks, 0.08–4 mm², 9–10 mm/0.33 in		
2-conductor	**281-916**	100 (4x25)
3-conductor	**281-610**	100 (4x25)
4-conductor	**281-656**	100 (4x25)
End plate, 2.5 mm thick,		
for 2-cond. carrier terminal block		
orange	**281-329**	100 (4x25)
gray	**281-328**	100 (4x25)
for 3-cond. carrier terminal block		
orange	**281-326**	100 (4x25)
gray	**281-324**	100 (4x25)
for 4-cond. carrier terminal block		
orange	**281-335**	100 (4x25)
gray	**281-334**	100 (4x25)

	Item No.	Pack. Unit
2-conductor fuse terminal block for mini-automotive blade-style fuses,		
with test point, gray, without blown fuse indication		
○	**282-696**	25
with blown fuse indication by LED, **12 V**		
○ Cuircuit I	**282-698/281-429**	25
○ Circuit II	**282-698/281-449**	25
with blown fuse indication by LED, **24 V**		
○ Cuircuit I	**282-698/281-413**	25
○ Circuit II	**282-698/281-434**	25
3-conductor through terminal block with same profile, with test point		
○ gray	**282-699**	25
● blue	**282-694**	25

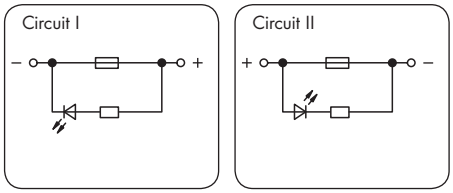

End and intermediate plate, 2 mm thick		
orange	**282-333**	100 (4 x 25)
gray	**282-334**	100 (4 x 25)

Accessories, 281 Series
Appropriate marking system: **WMB**

Adjacent jumper, insulated, I_N 32 A		
gray	**281-402**	200 (8x25)
Interlocking link, 1 m long,		
mechanically locks several fuse holders		
transparent	**210-254**	1
Test plug adapter, for terminal blocks 1.5–4 mm²		
(AWG 16–12), 5 mm wide		
	280-404	100 (4x25)
for test plug 2.3 mm Ø		
Test plug, 6 mm wide, with CAGE CLAMP®		
for 0.08–2.5 mm² (AWG 28–14)		
I_N 24 A	**281-407**	100 (4x25)
for 4 mm Ø test plug		

Accessories, 281 Series
Appropriate marking system: **WSB** 4 mm wide

Comb-style jumper bar, insulated, I_N 32 A		
2-way	**281-482**	100 (4x25)
3-way	**281-483**	100 (4x25)
10-way	**281-490**	50 (2x25)
Alternate comb-style jumper bar, insulated,		
I_N 32 A		
2-way	**281-492**	100 (4x25)
Operating tool, insulated		
2-way	**280-432**	1
3-way	**280-433**	1
5-way	**281-440**	1
Shorting link, 5 x 20 mm, 6.3 A,		
if the fuse plug is used as disconnect plug		
	281-503	250 (10x25)

Accessories, 282 Series
Appropriate marking system: **WMB**

Adjacent jumper, insulated, I_N 41 A		
gray	**282-402**	100 (4x25)
Alternate jumper, insulated,		
I_N 41 A		
gray	**282-409**	100 (4x25)
Operating tool with partially insulated shaft,		
type 2, (3.5 x 0.5) mm blade		
	210-720	1
Type 3, (5.5 x 0.8) mm blade		
	210-721	1

❸ Approvals are available online at: www.wago.com.

For technical explanations and abbreviations, see technical section.

Disconnect Terminal Blocks
280 / 281 / 282 Series

0.08 - 2.5 mm²	AWG 28 - 12*
400 V/8 kV/3	300 V, 15 A
I_N 10 A	300 V, 15 A

Terminal block width 5 mm / 0.197 in
8 - 9 mm / 0.33 in
❸ Approvals

0.08 - 2.5 mm²	AWG 28 - 12*
400 V/6 kV/3	600 V, 15 A
I_N 16 A	300 V, 15 A

Terminal block width 5 mm / 0.197 in
8 - 9 mm / 0.33 in
❸ Approvals

0.2 - 6 mm²	AWG 24 - 10
400 V/6 kV/3	600 V, 30 A
I_N 30 A	300 V, 36 A

Terminal block width 8 mm / 0.315 in
12 - 13 mm / 0.49 in
❸ Approvals

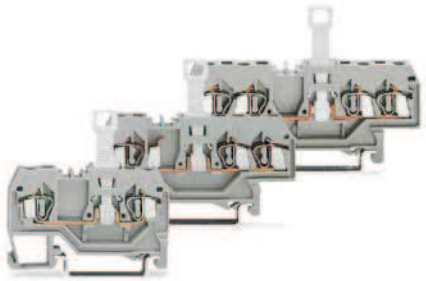

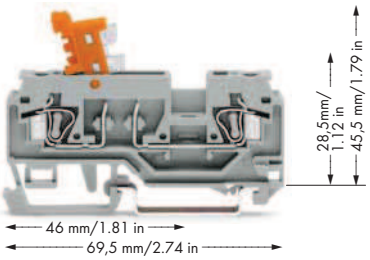

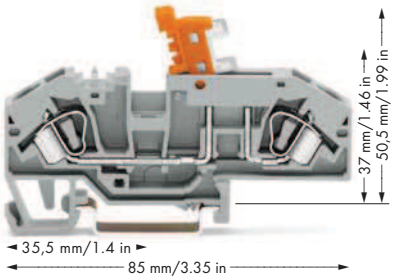

Color	Item No.	Pack. Unit
Disconnect terminal blocks, 280 Series		
2-conductor disconnect terminal block		
gray	**280-912**	50
blue	**280-914**	50
orange	**280-913**	50
3-conductor disconnect terminal block		
gray	**280-683**	50
4-conductor disconnect terminal block		
gray	**280-836**	50
blue	**280-839**	50
orange	**280-805**	50

Color	Item No.	Pack. Unit
2-conductor disconnect/test terminal block, with movable knife disconnect, with test slots for 2 mm and 2.3 mm Ø test plugs		
Housing / Knife disconnect		
gray / orange	**280-870**	100
gray / gray	**280-868**	100
blue / orange	**280-876**	100
orange / orange	**280-879**	100

Color	Item No.	Pack. Unit
2-conductor disconnect terminal block, with test point, same profile as fuse terminal blocks		
gray	**282-697**	25
blue	**282-695**	25
3-conductor through terminal block with same profile, with test point		
gray	**282-699**	25
blue	**282-694**	25

0.08 - 4 mm²	AWG 28 - 12
400 V/8 kV/3	300 V, 15 A
I_N 10 A	300 V, 15 A

Terminal block width 6 mm / 0.236 in
9 - 10 mm / 0.37 in
❸ Approvals

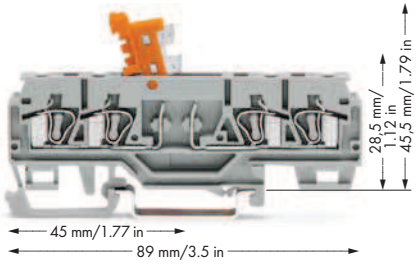

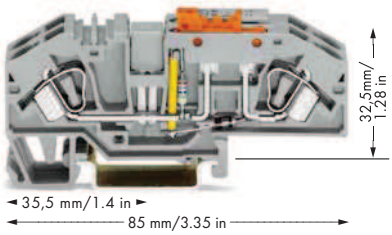

	Item No.	Pack. Unit
Disconnect terminal blocks, 281 Series		
gray		
2-conductor	**281-912**	50
3-conductor	**281-683**	50
4-conductor	**281-659**	50

Accessories, 280/281 Series Appropriate marking system: **WMB**

End plate



	280 Series	281 Series
for 2-cond. blocks		100 (4x25)
orange	**280-309**	**281-329**
gray	**280-308**	**281-328**
for 3-cond. blocks		100 (4x25)
orange	**280-326**	**281-326**
gray	**280-324**	**281-324**
for 4-cond. blocks		100 (4x25)
orange	**280-315**	**281-335**
gray	**280-314**	**281-334**

Test sockets, insulated,



2 mm Ø		
red	**209-107**	100 (2 x 50)
2.3 mm Ø		
yellow	**209-108**	100 (2 x 50)

Color	Item No.	Pack. Unit
4-conductor disconnect/test terminal block		
Housing / Knife disconnect		
gray / orange	**280-874**	50
gray / gray	**280-881**	50
blue / orange	**280-885**	50
orange / orange	**280-883**	50

Accessories, 280 Series Appropriate marking system: **WMB**

End plate, 2.5 mm thick



for 2-conductor terminal blocks		
orange	**280-371**	100 (4x25)
gray	**280-374**	100 (4x25)
for 4-conductor terminal blocks		
orange	**280-373**	100 (4x25)
gray	**280-376**	100 (4x25)

Operating tool with partially insulated shaft,



type 2, (3.5 x 0.5) mm blade		
	210-720	1
Type 3, (5.5 x 0.8) mm blade		
	210-721	1

Voltage	Item No.	Pack. Unit
Ground conductor disconnect terminal block, gray ❹		
Terminal block width 16 mm / 0.63 in		
24 V AC/DC	**282-640**	12
48 V AC/DC	**282-641**	12
120 V AC/DC	**282-638**	12
230 V AC/DC	**282-639**	12

Accessories, 282 Series Appropriate marking system: **WMB**

End plate, 2 mm thick



orange	**282-333**	100 (4x25)
gray	**282-334**	100 (4x25)

Adjacent jumper, insulated, I_N 41 A



gray	**282-402**	100 (4x25)

Alternate jumper, insulated, I_N 41 A



gray	**282-409**	100 (4x25)

Please find the entire product range in our Full Line Catalog, Volume 1. Additional information at www.wago.com.

* AWG 12: THHN, THWN

❹ For application notes, see page 83.

Transverse Switching Terminal Blocks and Longitudinal Switching Disconnect Terminal Blocks 282 Series

0.2 - 6 mm² / 500 V/6 kV/3 / I_N 30 A | AWG 24 - 10 / 600 V, 30 A Terminal block width 8 mm / 0.315 in 12 - 13 mm / 0.49 in ❶ Approvals	0.2 - 6 mm² / 500 V/6 kV/3 / I_N 30 A | AWG 24 - 10 / 600 V, 30 A Terminal block width 8 mm / 0.315 in 12 - 13 mm / 0.49 in ❶ Approvals	**Application Notes:**

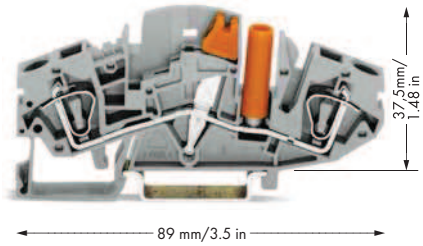

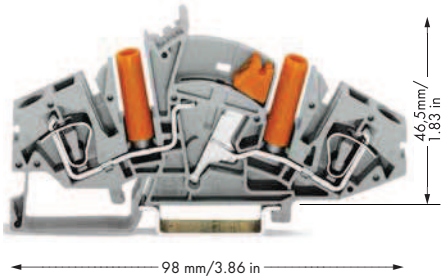

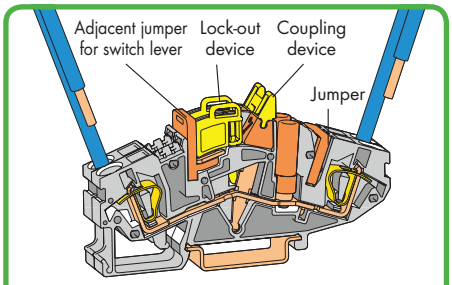

Transverse switching terminal block

Color	Item No.	Pack. Unit
Transverse switching terminal block, 2-conductor, with touch-proof test socket (orange), 4 mm Ø		
gray	**282-811**	20
End and separator plate, 1.5 mm thick		
orange	**282-366**	50 (2x25)
gray	**282-361**	50 (2x25)

Color	Item No.	Pack. Unit
Longitudinal switching disconnect terminal block, 2-conductor, with touch-proof test sockets (orange), 4 mm Ø		
gray	**282-821**	20
End and separator plate, 1.5 mm thick		
orange	**282-365**	50 (2x25)
gray	**282-360**	50 (2x25)

Accessories, 282 Series

Appropriate marking systems: **WMB/Mini-WSB**

Lock-out device, for switch lever		
yellow	**282-370**	100 (4x25)
Coupling device, yellow, for simultaneous operation of several switch levers		
2-way	**282-372**	50 (5x10)
3-way	**282-373**	50 (5x10)
4-way	**282-374**	50 (5x10)
Jumper, insulated, I_N 30 A, orange		
2-way	**282-432**	50 (5x10)
3-way	**282-433**	50 (5x10)
:	:	
10-way	**282-440**	50 (5x10)
Special version upon request (e.g., 1–3–5)		
Adjacent jumper for switch lever, insulated, I_N 30 A,		
2-way	**282-442**	50 (5x10)
3-way	**282-443**	50 (5x10)
4-way	**282-444**	50 (5x10)
Protective warning marker, with high-voltage symbol, for 5 terminal blocks		
yellow	**282-415**	100 (4x25)
Banana plugs, only for safety extra-low voltage (42 V)		
black	**215-311**	50
red	**215-212**	50
blue	**215-711**	50
For more colors and technical data, see page 193.		
Stickers for operating instructions		
	210-424	100

Lock-out device, for switch lever		
yellow	**282-370**	100 (4x25)
Coupling device, yellow, for simultaneous operation of several switch levers		
2-way	**282-372**	50 (5x10)
3-way	**282-373**	50 (5x10)
4-way	**282-374**	50 (5x10)
Jumper, insulated, I_N 30 A, orange		
2-way	**282-432**	50 (5x10)
3-way	**282-433**	50 (5x10)
:	:	
10-way	**282-440**	50 (5x10)
Special version upon request (e.g., 1–3–5)		
Collective carrier for jumpers,	**282-369**	25
Protective warning marker, with high-voltage symbol, for 5 terminal blocks		
yellow	**282-415**	100 (4x25)
Operating tool with partially insulated shaft, type 3, (5.5 x 0.8) mm blade		
	210-721	1
Stickers for operating instructions		
	210-423	100

WMB Multi marking system, 10 strips with 10 markers,					
with printing	blue	U/V	(50 each)	**794-5554/000-006**	1 card
	yellow	k/l	(50 each)	**794-5553/000-002**	1 card
	white	1...10	(10 each)	**793-5502**	5 cards
	white	11...20	(10 each)	**793-5503**	5 cards

Current transformer circuit with transverse switching terminal blocks

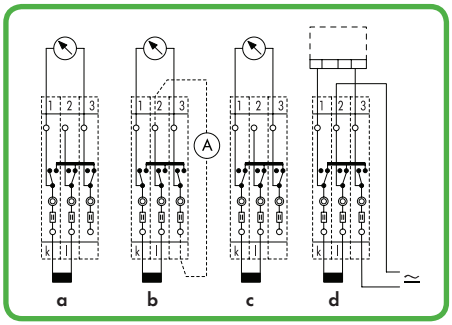

a = Normal operation b = Measurement testing
c = Transformer short-circuit d = Relay testing

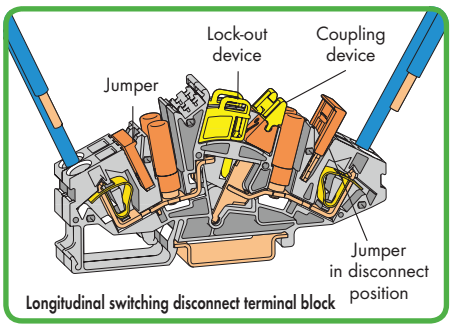

Longitudinal switching disconnect terminal block

Current transformer circuit with longitudinal switching disconnect terminal blocks

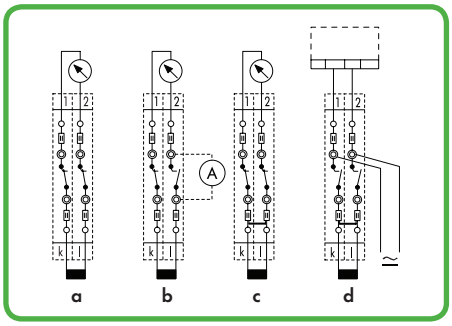

a = Normal operation b = Measurement testing
c = Transformer short-circuit d = Relay testing

❶ Approvals are available online at: www.wago.com.

For technical explanations and abbreviations, see technical section.

Disconnect/test terminal blocks
282 Series

0.2 - 6 mm²	AWG 24 - 10
500 V/6 kV/3	600 V, 30 A
I_N 30 A	600 V, 30 A

Terminal block width 8 mm / 0.315 in
12 - 13 mm / 0.49 in
❶ Approvals

0.2 - 6 mm² | AWG 24 - 10
500 V/6 kV/3 | 600 V, 30 A
I_N 30 A | 600 V, 30 A
Terminal block width 8 mm / 0.315 in
12 - 13 mm / 0.49 in
❶ Approvals

Application Notes:

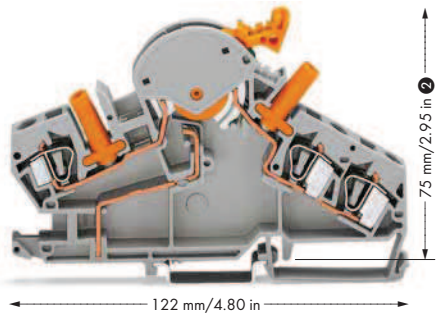

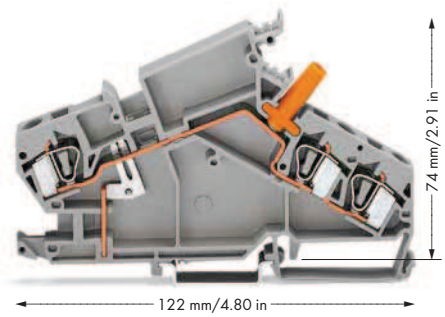

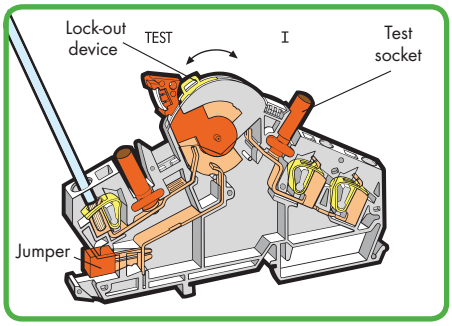

Color	Item No.	Pack. Unit
Disconnect/test terminal block, e.g., for current transformer circuits, with touch-proof test sockets (orange), 4 mm Ø, orange disconnect link		
gray	**282-870**	20

Color	Item No.	Pack. Unit
Through terminal block, e.g., current transformer circuits, with touch-proof test socket (orange), 4 mm Ø		
gray	**282-865**	20

Current transformer circuits

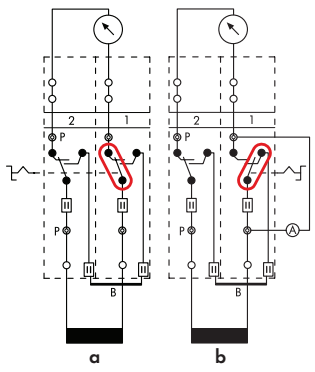

a = Normal operation b = Measurement testing

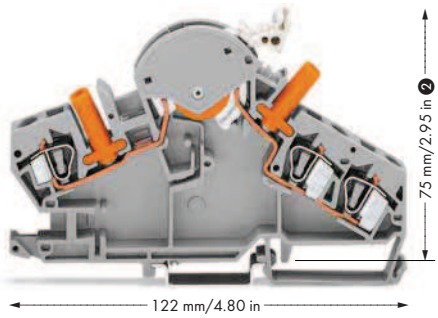

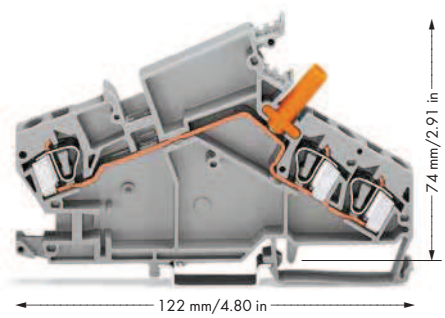

Color	Item No.	Pack. Unit
Disconnect/test terminal block, e.g., voltage transformer circuits, with touch-proof test sockets (orange), 4 mm Ø, disconnect link, light gray		
gray	**282-860**	20
green-yellow (with ground foot)	**282-868**	20
End plate, for disconnect/test terminal blocks, 1.5 mm thick		
orange	**282-387**	50 (5x10)
gray	**282-392**	50 (5x10)

Color	Item No.	Pack. Unit
Through terminal block, e.g., voltage transformer circuits, with touch-proof test socket (orange), 4 mm Ø		
gray	**282-866**	20
End plate, for through terminal blocks, 1.5 mm thick		
orange	**282-385**	50 (5x10)
gray	**282-390**	50 (5x10)

Current transformer circuits

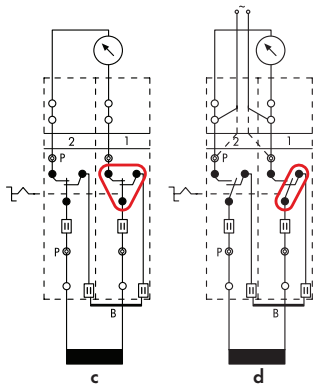

c = Transformer short-circuit d = Relay testing

Accessories, 282 Series

Appropriate marking system: **WMB**

Adjacent jumper			
	gray	**282-402**	100 (4x25)
	orange	**282-424**	100 (4x25)
Lock-out device, for disconnect link			
	yellow	**282-384**	100 (5x20)
Interlocking link, mechanically locks multiple links, 1 m long, transparent		**210-254**	1
Locking cover, mechanically locks multiple links, transparent			
	1-pole	**282-881**	50 (5x10)
	:	:	
	4-pole	**282-884**	50 (5x10)

Wire commoning chain, insulated, black, 4 connections, 24 A, 2.5 mm²/ AWG 14			
	3 x 80 mm	**709-110**	1
Wire commoning chain, insulated, black, 3 connections, 24 A, 2.5 mm²/AWG 14			
	2 x 90 mm	**709-111**	1
	2 x 150 mm	**709-112**	1
Protective warning marker, with high-voltage symbol, for 5 terminal blocks			
	yellow	**282-415**	100 (4x25)
Banana plugs, only for safety extra-low voltage (42 V)			
	black	**215-311**	50
	red	**215-212**	50
	blue	**215-711**	50

For more colors and technical data, see page 193.

Terminal blocks and accessories required:

2 x disconnect/test terminal block	**282-870**
1 x jumper, orange	**282-424**
1 x end plate, orange	**282-386**
1 x locking cover, transparent	**282-882**

In addition, interlocking links, lock-out devices

❷ Max. height when rotating the disconnect link (incl. locking cover): 92 mm/3.62 in.
Please find the entire product range in our Full Line Catalog, Volume 1. Additional information at www.wago.com.