Disconnect terminal blocks with knife disconnect

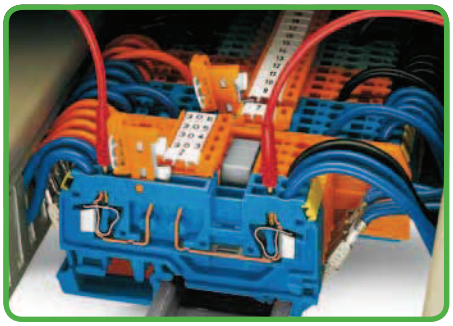

Disconnecting by knife disconnect.
Test slot for 2 mm or 2.3 mm Ø test plugs – direct contact to the current bar.

Longitudinal switching disconnect terminal blocks



Disconnecting by disconnect link.
4 mm Ø test slots are integrated.

Disconnect/test terminal blocks

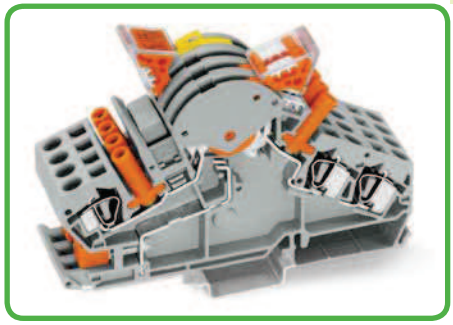

Example: current or voltage transformer circuits

Staggered jumpers

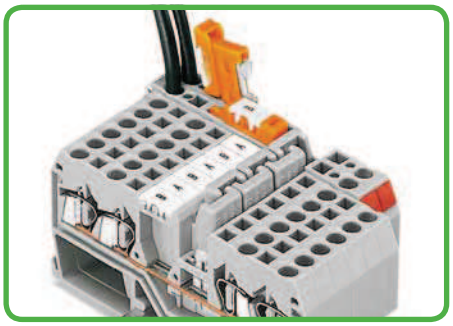

Staggered jumpers for sophisticated circuit requirements.
Push jumper down until fully inserted!

Commoning

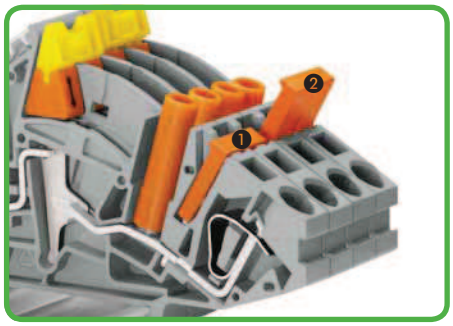

Longitudinal switching disconnect terminal blocks with jumpers
❶ commoned and ❷ isolated

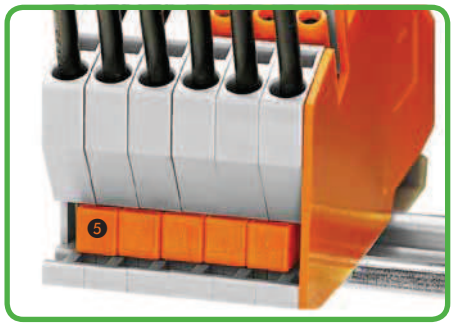

Terminal strip permanently prepared for current transformer circuits with short circuit jumpers ❺

Power supply

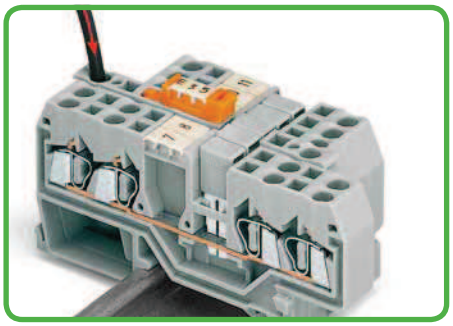

Power distribution using disconnect link in supply line. Disconnection of all outputs.

Transverse switching terminal blocks

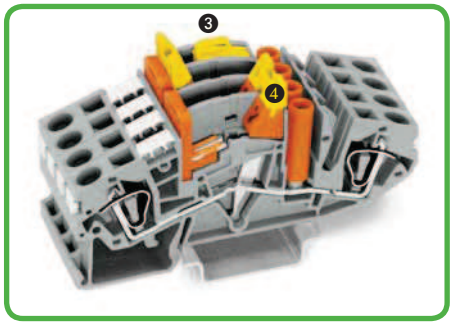

For current transformer circuits with
❸ lockout and
❹ coupling device.

Locking cover and lock-out seal

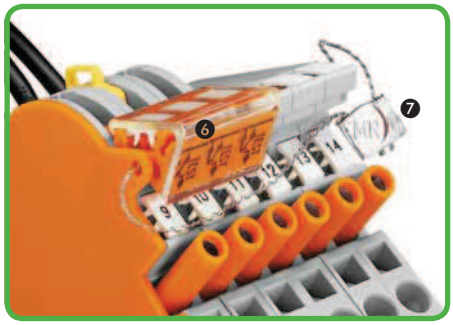

❻ Transparent locking cover (for 1- 4 disconnect links) can be snapped on for mechanical interlocking for multipole switching.
❼ A lock-out seal can be used on the disconnect link in notched position "I".

Disconnect terminal blocks 6 mm²/AWG 10

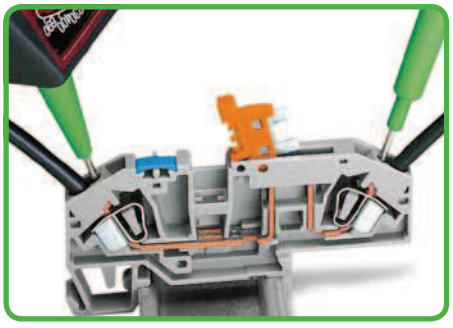

Testing a 6mm²/AWG 10 disconnect terminal block.

Switch positions

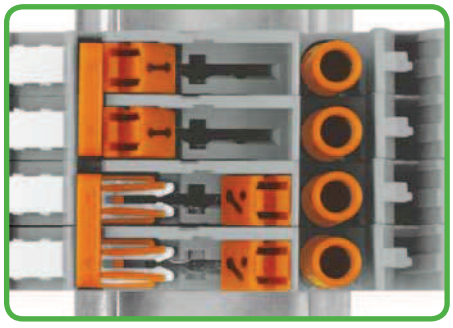

closed open

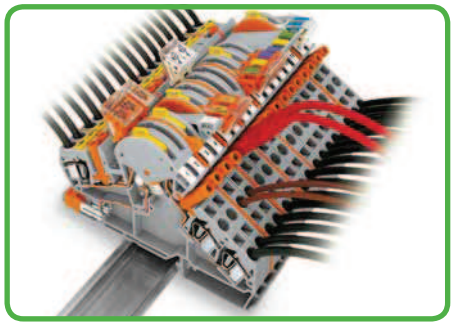

Transformer terminal strip (e.g., for meter boards or substations of the power supply industry).



fine-stranded, tip-bonded



fine-stranded with ferrule ❽ (gastight crimped)

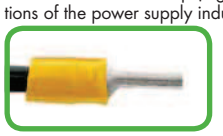

fine-stranded, with pin terminal (gastight crimped)

❽ With ferruled conductors, the max. conductor cross section accommodated is one size smaller than max. rating of terminal block.

WAGO®

Fuse Disconnect Terminal Blocks and Fuse Plugs
281 and 282 Series

0.08 - 4 mm² | **AWG 28 - 12**
❶ 800 V/8 kV/3 | **600 V, 10 A**
❶ I_N 10 A max. | **600 V, 15 A**
Terminal block 8 mm / 0.315 in
Terminal block width 10 mm / 0.394 in
9 - 10 mm / 0.37 in
❸ Approvals

❶ 250 V max.
❶ I_N 6.3 A max.
Plug width 6 mm / 0.236 in
❸ Approvals

0.2 - 6 mm² | **AWG 24 - 10**
❶ 400 V/6 kV/3
❶ I_N 30 A
Terminal block width 8 mm / 0.315 in
12 - 13 mm / 0.49 in
❸ Approvals

❶ Nominal voltage and current are given by the fuse or blown fuse indicator!

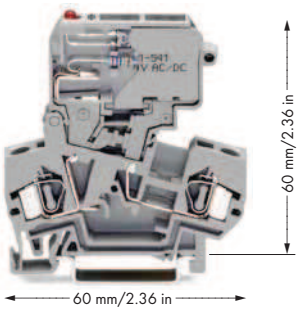

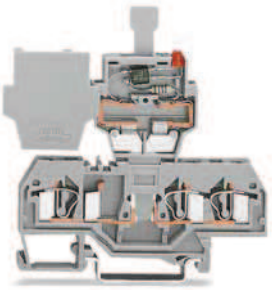

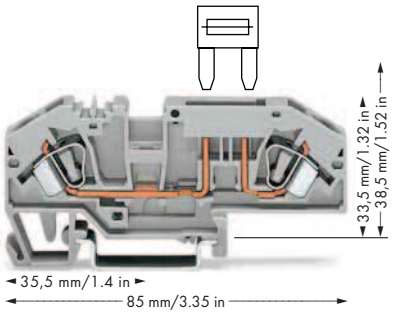

	Item No.	Pack. Unit
Fuse disconnect terminal block, gray		
for miniature metric fuses		
○ 5 x 20 mm	**281-611**	50
○ 5 x 20 mm	**281-611/281-541❶**	50
○ 5 x 20 mm	**281-611/281-417❷**	50
○ 5 x 25 mm	**281-612**	50
○ 5 x 25 mm	**281-612/281-541❶**	50
○ 5 x 25 mm	**281-612/281-417❷**	50
○ 5 x 30 mm	**281-622**	50
○	**281-622/281-541❶**	50
○	**281-622/281-417❷**	50
Terminal block width 10 mm/0.394 in		
○ 0.25" x 1"	**281-613**	50
○ 0.25" x 1"	**281-613/281-541❶**	50
○ 0.25" x 1"	**281-613/281-417❷**	50
○ 0.25" x 1.25"	**281-623**	50
○ 0.25" x 1.25"	**281-623/281-541❶**	50
○ 0.25" x 1.25"	**281-623/281-417❷**	50
with blown fuse indication by:		
❶ LED 15–30 V ≃		
❷ Neon lamp 230 V ≃		
Other voltages upon request.		
End and intermediate plate, 2.5 mm thick		
orange	**281-309**	100 (4x25)
gray	**281-311**	100 (4x25)

	Item No.	Pack. Unit
Fuse plug,		
6 mm wide, with pull-tab,		
for miniature metric fuses 5 x 20 mm and 5 x 25 mm,		
without blown fuse indication		
○	**281-511**	50
with LED		
○ 24 V AC/DC	**281-512/281-501**	50
with neon lamp		
○ 120 V AC/DC	**281-512/281-418**	50
○ 230 V AC/DC	**281-512/281-417**	50
Carrier blocks, 0.08–4 mm², 9–10 mm/0.33 in		
2-conductor	**281-916**	100 (4x25)
3-conductor	**281-610**	100 (4x25)
4-conductor	**281-656**	100 (4x25)
End plate, 2.5 mm thick,		
for 2-cond. carrier terminal block		
orange	**281-329**	100 (4x25)
gray	**281-328**	100 (4x25)
for 3-cond. carrier terminal block		
orange	**281-326**	100 (4x25)
gray	**281-324**	100 (4x25)
for 4-cond. carrier terminal block		
orange	**281-335**	100 (4x25)
gray	**281-334**	100 (4x25)

	Item No.	Pack. Unit
2-conductor fuse terminal block for mini-automotive blade-style fuses,		
with test point, gray, without blown fuse indication		
○	**282-696**	25
with blown fuse indication by LED, **12 V**		
○ Cuircuit I	**282-698/281-429**	25
○ Circuit II	**282-698/281-449**	25
with blown fuse indication by LED, **24 V**		
○ Cuircuit I	**282-698/281-413**	25
○ Circuit II	**282-698/281-434**	25
3-conductor through terminal block with same profile, with test point		
○ gray	**282-699**	25
● blue	**282-694**	25

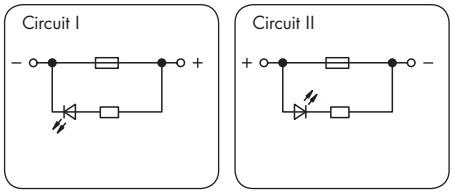

End and intermediate plate, 2 mm thick		
orange	**282-333**	100 (4 x 25)
gray	**282-334**	100 (4 x 25)

Accessories, 281 Series
Appropriate marking system: **WMB**

Adjacent jumper, insulated, I_N 32 A		
gray	**281-402**	200 (8x25)
Interlocking link, 1 m long,		
mechanically locks several fuse holders		
transparent	**210-254**	1
Test plug adapter, for terminal blocks 1.5–4 mm²		
(AWG 16–12), 5 mm wide		
	280-404	100 (4x25)
for test plug 2.3 mm Ø		
Test plug, 6 mm wide, with CAGE CLAMP®		
for 0.08–2.5 mm² (AWG 28–14)		
I_N 24 A	**281-407**	100 (4x25)
for 4 mm Ø test plug		

Accessories, 281 Series
Appropriate marking system: **WSB** 4 mm wide

Comb-style jumper bar, insulated, I_N 32 A		
2-way	**281-482**	100 (4x25)
3-way	**281-483**	100 (4x25)
10-way	**281-490**	50 (2x25)
Alternate comb-style jumper bar, insulated,		
I_N 32 A		
2-way	**281-492**	100 (4x25)
Operating tool, insulated		
2-way	**280-432**	1
3-way	**280-433**	1
5-way	**281-440**	1
Shorting link, 5 x 20 mm, 6.3 A,		
if the fuse plug is used as disconnect plug		
	281-503	250 (10x25)

Accessories, 282 Series
Appropriate marking system: **WMB**

Adjacent jumper, insulated, I_N 41 A		
gray	**282-402**	100 (4x25)
Alternate jumper, insulated,		
I_N 41 A		
gray	**282-409**	100 (4x25)
Operating tool with partially insulated shaft,		
type 2, (3.5 x 0.5) mm blade		
	210-720	1
Type 3, (5.5 x 0.8) mm blade		
	210-721	1

❸ Approvals are available online at: www.wago.com.

For technical explanations and abbreviations, see technical section.

Disconnect Terminal Blocks
280 / 281 / 282 Series

0.08 - 2.5 mm²	AWG 28 - 12*
400 V/8 kV/3	300 V, 15 A
I_N 10 A	300 V, 15 A

Terminal block width 5 mm / 0.197 in
8 - 9 mm / 0.33 in
❸ Approvals

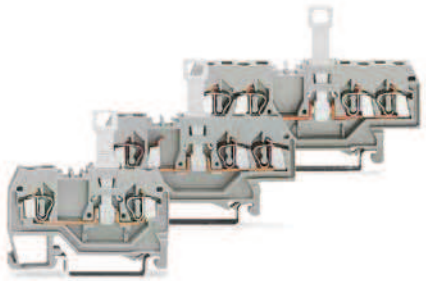

0.08 - 2.5 mm²	AWG 28 - 12*
400 V/6 kV/3	600 V, 15 A
I_N 16 A	300 V, 15 A

Terminal block width 5 mm / 0.197 in
8 - 9 mm / 0.33 in
❸ Approvals

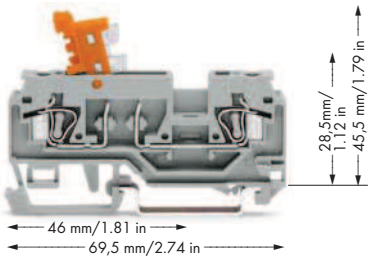

0.2 - 6 mm²	AWG 24 - 10
400 V/6 kV/3	600 V, 30 A
I_N 30 A	300 V, 36 A

Terminal block width 8 mm / 0.315 in
12 - 13 mm / 0.49 in
❸ Approvals

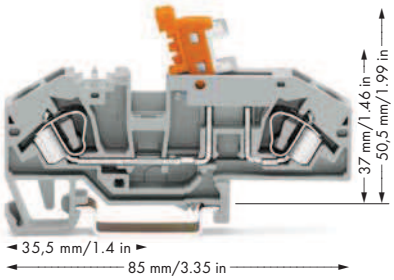

Color	Item No.	Pack. Unit
Disconnect terminal blocks, 280 Series		
2-conductor disconnect terminal block		
gray	**280-912**	50
blue	**280-914**	50
orange	**280-913**	50
3-conductor disconnect terminal block		
gray	**280-683**	50
4-conductor disconnect terminal block		
gray	**280-836**	50
blue	**280-839**	50
orange	**280-805**	50

Color		Item No.	Pack. Unit
2-conductor disconnect/test terminal block, with movable knife disconnect, with test slots for 2 mm and 2.3 mm Ø test plugs			
Housing	Knife disconnect		
gray	orange	**280-870**	100
gray	gray	**280-868**	100
blue	orange	**280-876**	100
orange	orange	**280-879**	100

Color	Item No.	Pack. Unit
2-conductor disconnect terminal block, with test point, same profile as fuse terminal blocks		
gray	**282-697**	25
blue	**282-695**	25
3-conductor through terminal block with same profile, with test point		
gray	**282-699**	25
blue	**282-694**	25

0.08 - 4 mm²	AWG 28 - 12
400 V/8 kV/3	300 V, 15 A
I_N 10 A	300 V, 15 A

Terminal block width 6 mm / 0.236 in
9 - 10 mm / 0.37 in
❸ Approvals

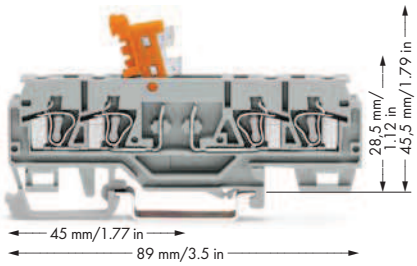

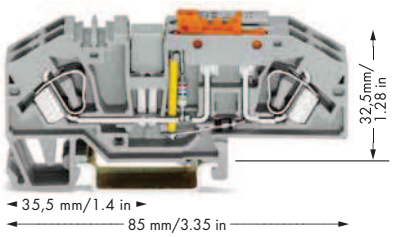

	Item No.	Pack. Unit
Disconnect terminal blocks, 281 Series		
gray		
2-conductor	**281-912**	50
3-conductor	**281-683**	50
4-conductor	**281-659**	50

Accessories, 280/281 Series Appropriate marking system: **WMB**

End plate



	280 Series	281 Series
for 2-cond. blocks		100 (4x25)
orange	**280-309**	**281-329**
gray	**280-308**	**281-328**
for 3-cond. blocks		100 (4x25)
orange	**280-326**	**281-326**
gray	**280-324**	**281-324**
for 4-cond. blocks		100 (4x25)
orange	**280-315**	**281-335**
gray	**280-314**	**281-334**

Test sockets, insulated,



2 mm Ø		
red	**209-107**	100 (2 x 50)
2.3 mm Ø		
yellow	**209-108**	100 (2 x 50)

Color	Item No.	Pack. Unit
4-conductor disconnect/test terminal block		
Housing / Knife disconnect		
gray / orange	**280-874**	50
gray / gray	**280-881**	50
blue / orange	**280-885**	50
orange / orange	**280-883**	50

Accessories, 280 Series Appropriate marking system: **WMB**

End plate, 2.5 mm thick



for 2-conductor terminal blocks		
orange	**280-371**	100 (4x25)
gray	**280-374**	100 (4x25)
for 4-conductor terminal blocks		
orange	**280-373**	100 (4x25)
gray	**280-376**	100 (4x25)

Operating tool with partially insulated shaft,



type 2, (3.5 x 0.5) mm blade		
	210-720	1
Type 3, (5.5 x 0.8) mm blade		
	210-721	1

Voltage	Item No.	Pack. Unit
Ground conductor disconnect terminal block, gray ❹		
Terminal block width 16 mm / 0.63 in		
24 V AC/DC	**282-640**	12
48 V AC/DC	**282-641**	12
120 V AC/DC	**282-638**	12
230 V AC/DC	**282-639**	12

Accessories, 282 Series Appropriate marking system: **WMB**

End plate, 2 mm thick



orange	**282-333**	100 (4x25)
gray	**282-334**	100 (4x25)

Adjacent jumper, insulated, I_N 41 A



gray	**282-402**	100 (4x25)

Alternate jumper, insulated, I_N 41 A



gray	**282-409**	100 (4x25)

Please find the entire product range in our Full Line Catalog, Volume 1. Additional information at www.wago.com.

* AWG 12: THHN, THWN

❹ For application notes, see page 83.

Transverse Switching Terminal Blocks and Longitudinal Switching Disconnect Terminal Blocks 282 Series

0.2 - 6 mm² / 500 V/6 kV/3 / I_N 30 A | AWG 24 - 10 / 600 V, 30 A Terminal block width 8 mm / 0.315 in 12 - 13 mm / 0.49 in ❶ Approvals	0.2 - 6 mm² / 500 V/6 kV/3 / I_N 30 A | AWG 24 - 10 / 600 V, 30 A Terminal block width 8 mm / 0.315 in 12 - 13 mm / 0.49 in ❶ Approvals	**Application Notes:**

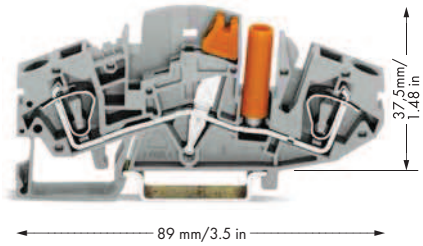

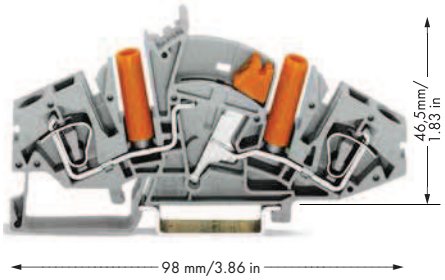

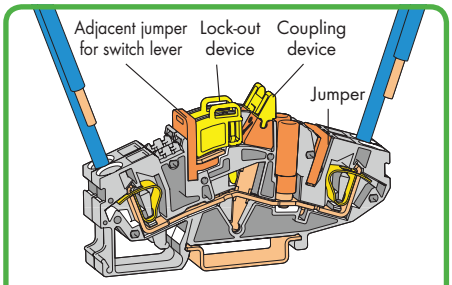

Transverse switching terminal block

Color	Item No.	Pack. Unit
Transverse switching terminal block, 2-conductor, with touch-proof test socket (orange), 4 mm Ø		
gray	**282-811**	20
End and separator plate, 1.5 mm thick		
orange	**282-366**	50 (2x25)
gray	**282-361**	50 (2x25)

Color	Item No.	Pack. Unit
Longitudinal switching disconnect terminal block, 2-conductor, with touch-proof test sockets (orange), 4 mm Ø		
gray	**282-821**	20
End and separator plate, 1.5 mm thick		
orange	**282-365**	50 (2x25)
gray	**282-360**	50 (2x25)

Accessories, 282 Series

Appropriate marking systems: **WMB/Mini-WSB**

Lock-out device, for switch lever		
yellow	**282-370**	100 (4x25)
Coupling device, yellow, for simultaneous operation of several switch levers		
2-way	**282-372**	50 (5x10)
3-way	**282-373**	50 (5x10)
4-way	**282-374**	50 (5x10)
Jumper, insulated, I_N 30 A, orange		
2-way	**282-432**	50 (5x10)
3-way	**282-433**	50 (5x10)
:	:	
10-way	**282-440**	50 (5x10)
Special version upon request (e.g., 1–3–5)		
Adjacent jumper for switch lever, insulated, I_N 30 A,		
2-way	**282-442**	50 (5x10)
3-way	**282-443**	50 (5x10)
4-way	**282-444**	50 (5x10)
Protective warning marker, with high-voltage symbol, for 5 terminal blocks		
yellow	**282-415**	100 (4x25)
Banana plugs, only for safety extra-low voltage (42 V)		
black	**215-311**	50
red	**215-212**	50
blue	**215-711**	50
For more colors and technical data, see page 193.		
Stickers for operating instructions		
	210-424	100

Lock-out device, for switch lever		
yellow	**282-370**	100 (4x25)
Coupling device, yellow, for simultaneous operation of several switch levers		
2-way	**282-372**	50 (5x10)
3-way	**282-373**	50 (5x10)
4-way	**282-374**	50 (5x10)
Jumper, insulated, I_N 30 A, orange		
2-way	**282-432**	50 (5x10)
3-way	**282-433**	50 (5x10)
:	:	
10-way	**282-440**	50 (5x10)
Special version upon request (e.g., 1–3–5)		
Collective carrier for jumpers,	**282-369**	25
Protective warning marker, with high-voltage symbol, for 5 terminal blocks		
yellow	**282-415**	100 (4x25)
Operating tool with partially insulated shaft, type 3, (5.5 x 0.8) mm blade		
	210-721	1
Stickers for operating instructions		
	210-423	100

WMB Multi marking system, 10 strips with 10 markers,					
with printing	blue	U/V	(50 each)	**794-5554/000-006**	1 card
	yellow	k/l	(50 each)	**794-5553/000-002**	1 card
	white	1...10	(10 each)	**793-5502**	5 cards
	white	11...20	(10 each)	**793-5503**	5 cards

Current transformer circuit with transverse switching terminal blocks

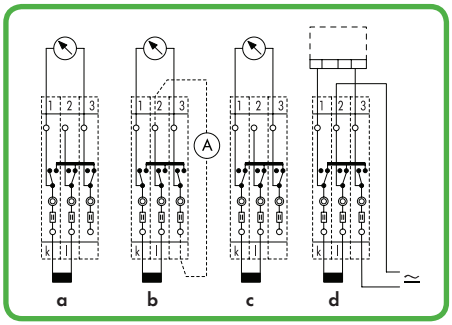

a = Normal operation b = Measurement testing
c = Transformer short-circuit d = Relay testing

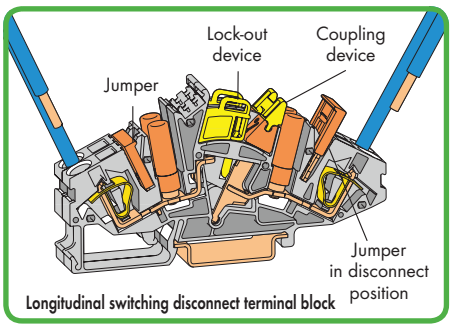

Longitudinal switching disconnect terminal block

Current transformer circuit with longitudinal switching disconnect terminal blocks

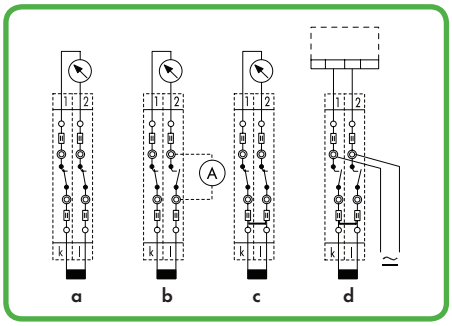

a = Normal operation b = Measurement testing
c = Transformer short-circuit d = Relay testing

❶ Approvals are available online at: www.wago.com.

For technical explanations and abbreviations, see technical section.

Disconnect/test terminal blocks
282 Series

0.2 - 6 mm²	AWG 24 - 10
500 V/6 kV/3	600 V, 30 A
I_N 30 A	600 V, 30 A

Terminal block width 8 mm / 0.315 in
12 - 13 mm / 0.49 in
❶ Approvals

0.2 - 6 mm² | AWG 24 - 10
500 V/6 kV/3 | 600 V, 30 A
I_N 30 A | 600 V, 30 A
Terminal block width 8 mm / 0.315 in
12 - 13 mm / 0.49 in
❶ Approvals

Application Notes:

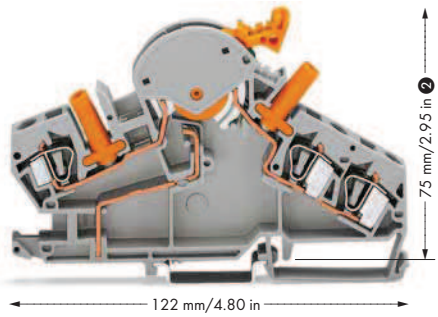

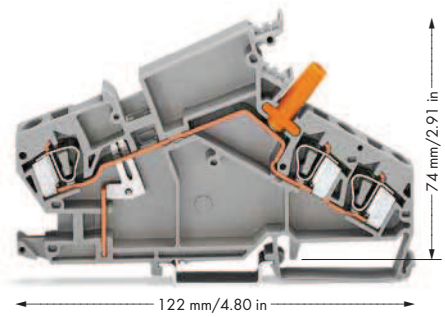

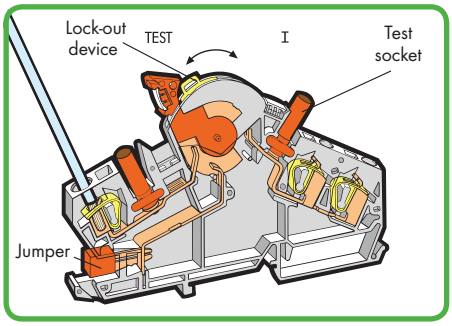

Color	Item No.	Pack. Unit
Disconnect/test terminal block, e.g., for current transformer circuits, with touch-proof test sockets (orange), 4 mm Ø, orange disconnect link		
gray	**282-870**	20

Color	Item No.	Pack. Unit
Through terminal block, e.g., current transformer circuits, with touch-proof test socket (orange), 4 mm Ø		
gray	**282-865**	20

Current transformer circuits

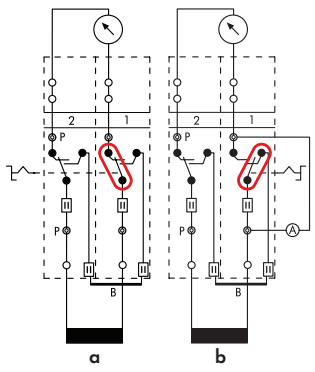

a = Normal operation b = Measurement testing

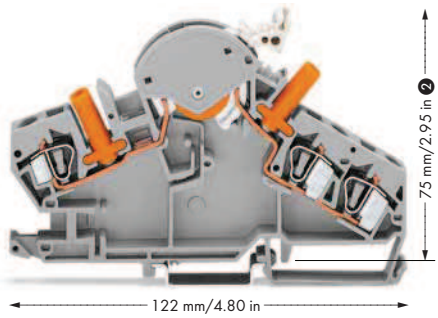

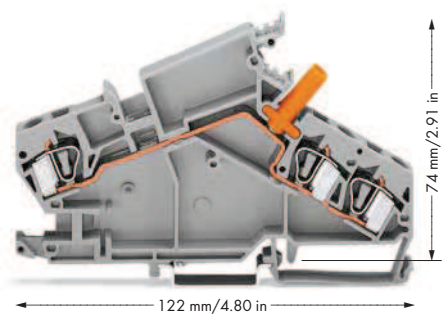

Color	Item No.	Pack. Unit
Disconnect/test terminal block, e.g., voltage transformer circuits, with touch-proof test sockets (orange), 4 mm Ø, disconnect link, light gray		
gray	**282-860**	20
green-yellow (with ground foot)	**282-868**	20
End plate, for disconnect/test terminal blocks, 1.5 mm thick		
orange	**282-387**	50 (5x10)
gray	**282-392**	50 (5x10)

Color	Item No.	Pack. Unit
Through terminal block, e.g., voltage transformer circuits, with touch-proof test socket (orange), 4 mm Ø		
gray	**282-866**	20
End plate, for through terminal blocks, 1.5 mm thick		
orange	**282-385**	50 (5x10)
gray	**282-390**	50 (5x10)

Current transformer circuits

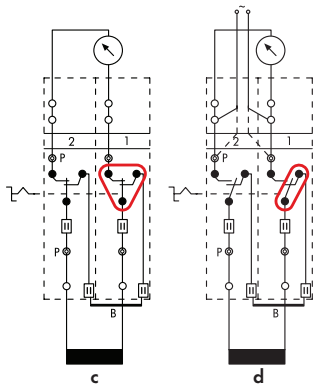

c = Transformer short-circuit d = Relay testing

Accessories, 282 Series

Appropriate marking system: **WMB**

Adjacent jumper			
	gray	**282-402**	100 (4x25)
	orange	**282-424**	100 (4x25)
Lock-out device, for disconnect link			
	yellow	**282-384**	100 (5x20)
Interlocking link, mechanically locks multiple links, 1 m long, transparent		**210-254**	1
Locking cover, mechanically locks multiple links, transparent			
	1-pole	**282-881**	50 (5x10)
	:	:	
	4-pole	**282-884**	50 (5x10)

Wire commoning chain, insulated, black, 4 connections, 24 A, 2.5 mm²/ AWG 14			
	3 x 80 mm	**709-110**	1
Wire commoning chain, insulated, black, 3 connections, 24 A, 2.5 mm²/AWG 14			
	2 x 90 mm	**709-111**	1
	2 x 150 mm	**709-112**	1
Protective warning marker, with high-voltage symbol, for 5 terminal blocks			
	yellow	**282-415**	100 (4x25)
Banana plugs, only for safety extra-low voltage (42 V)			
	black	**215-311**	50
	red	**215-212**	50
	blue	**215-711**	50

For more colors and technical data, see page 193.

Terminal blocks and accessories required:

2 x disconnect/test terminal block	**282-870**
1 x jumper, orange	**282-424**
1 x end plate, orange	**282-386**
1 x locking cover, transparent	**282-882**

In addition, interlocking links, lock-out devices

❷ Max. height when rotating the disconnect link (incl. locking cover): 92 mm/3.62 in.
Please find the entire product range in our Full Line Catalog, Volume 1. Additional information at www.wago.com.