TOPJOB®S Function Terminal Blocks 2002, 2004 and 2006 Series

Fuse disconnect terminal blocks

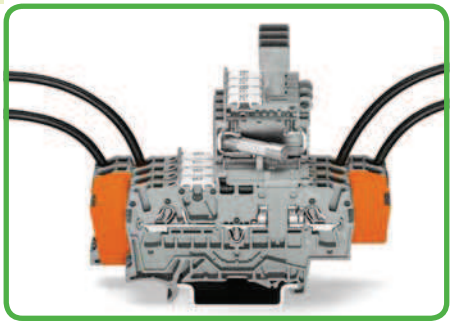

Pluggable fuse module with blown fuse indication on a 3-conductor carrier terminal block.

Disconnect/test terminal blocks

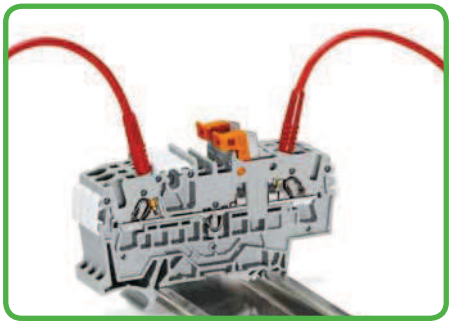

Movable knife disconnects clearly indicate the circuit state.

Diode and LED terminal blocks

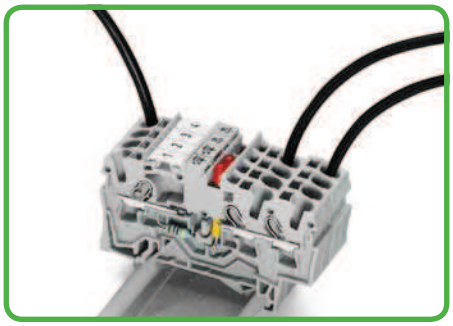

Designing custom circuits:
- via diode terminal blocks (e.g., collective fault signals)
- via LED terminal blocks (e.g., monitoring units).

Fuse replacement 1

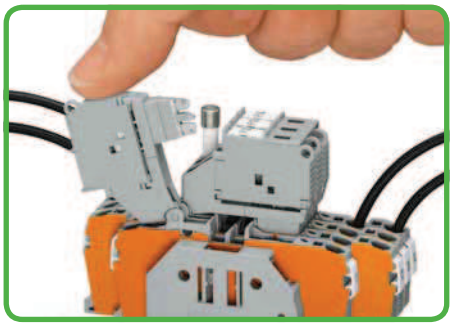

Before replacing the fuse, pivot the fuse holder into the locked open position.

Commoning and marking

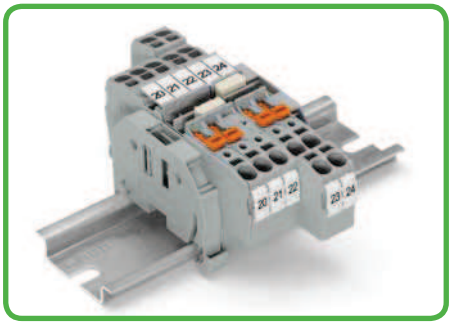

Dual jumper slots, in the same position as the 2002 Series terminal blocks. Commoning options in front of or behind the knife disconnect, depending on the power supply direction. One center and two side marker slots for WMB markers or marking strips.

Commoning

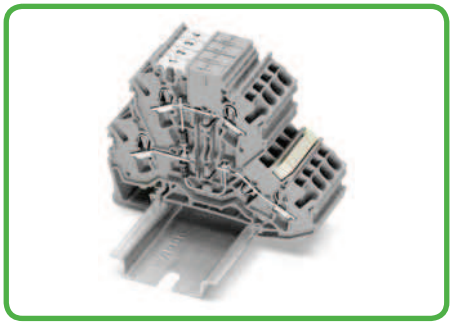

Custom circuit design via push-in type jumper bars. Example shows "lamp test circuit."

Fuse replacement 2

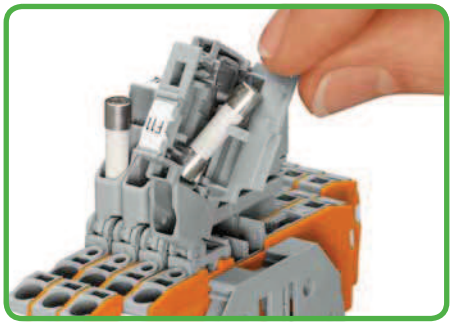

One end of the fuse is automatically ejected from the holder when opening the cover.

Additional marking

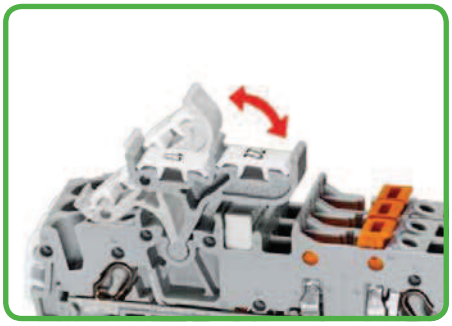

Additional marking option via pivoting marker carriers.

Application

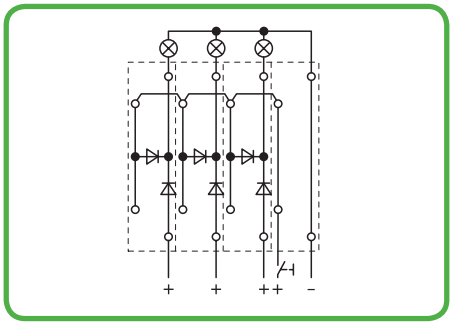

Lamp test circuit

Mini-automotive blade-style fuses

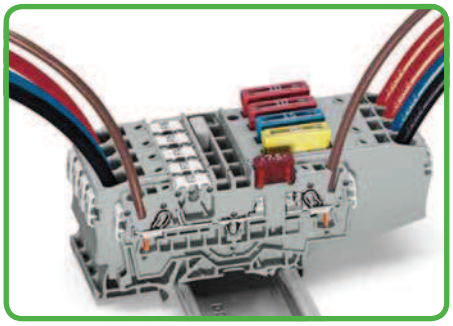

Fuse terminal block for mini-automotive blade-style fuses

Double-deck disconnect terminal blocks

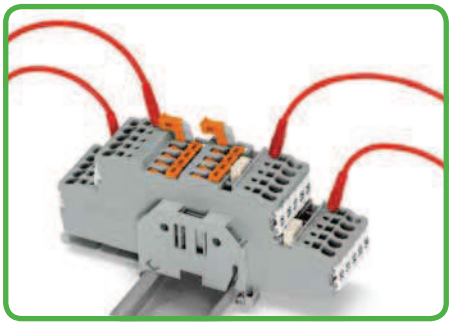

Two disconnect terminal blocks with different potential are housed on two levels in a double-deck disconnect terminal block.

Triple-deck diode terminal blocks

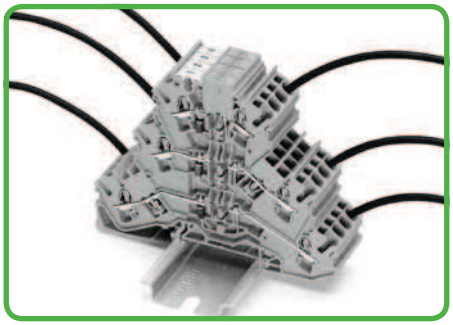

Space saving arrangement.

CAGE CLAMP®S clamps the following copper conductors:



solid | stranded | fine-stranded | tip bonded | with ferrule | with pin terminal

Strip length, see packaging or instructions.

TOPJOB®S
Disconnect/Test and Fuse Terminal Blocks, 2-Conductor
2002 Series

CAGE CLAMP®S

0.25 - 2.5 (4) mm² ❶ | AWG 22 - 12
400 V/6 kV/3
I_N 16 A
Terminal block width 5.2 mm / 0.205 in
10 - 12 mm / 0.43 in
❸ Approvals

0.25 - 2.5 (4) mm² ❶ | AWG 22 - 12
400 V/6 kV/3
I_N 10 A ❷
Terminal block width 5.2 mm / 0.205 in
10 - 12 mm / 0.43 in
❸ Approvals

0.25 - 2.5 (4) mm² ❶ | AWG 22 - 12
250 V/6 kV/3
I_N 6.3 A ❷
Terminal block width 6.2 mm / 0.244 in
10 - 12 mm / 0.43 in
❸ Approvals

❶ Conductor sizes: 0.25 – 4 mm² "s + f-st"; Push-in conductor sizes: 0.75 – 4 mm² "s" and 0.75 – 2.5 mm² "insulated ferrule, 12 mm"

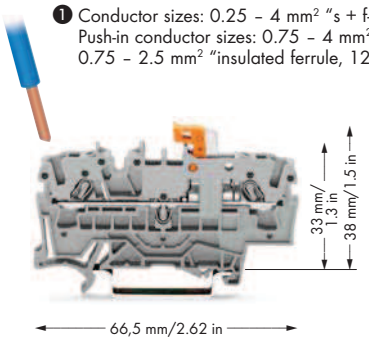

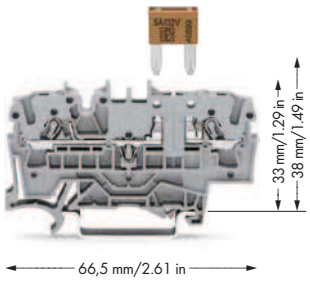

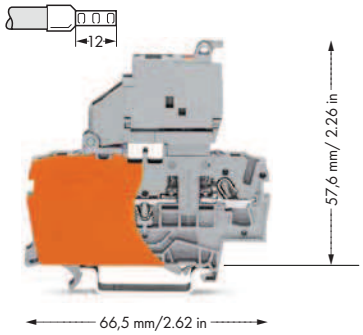

Color	Item No.	Pack. Unit
2-conductor disconnect/test terminal block		
gray	**2002-1671**	50
blue	**2002-1674**	50
orange	**2002-1672**	50
2-conductor through terminal block, same profile		
gray	**2002-1601**	50
blue	**2002-1604**	50
orange	**2002-1602**	50

Color	Item No.	Pack. Unit
2-conductor fuse terminal block,		
for blade-style fuses acc. to DIN 72581-3f, ISO 8820-3		
gray	**2002-1681**	50
- Individual arrangement: 10 A		
- Block arrangement: 5 A		
Protection against direct contact must be observed for 42 V and higher voltages!		

Color	Item No.	Pack. Unit
2-conductor fuse terminal block with end plate,		
with blown fuse indication, for miniature metric fuses, gray		
12 – 30 V ≃	**2002-1611/1000-541**	50
30 – 65 V ≃	**2002-1611/1000-542**	50
120 V ≃	**2002-1611/1000-867**	50
230 V ≃	**2002-1611/1000-836**	50
2-conductor fuse terminal block with end plate,		
without blown fuse indication, gray		
	2002-1611	50

Item-Specific Accessories

End and intermediate plate, 1 mm thick



orange	**2002-1692**	100 (4x25)
gray	**2002-1691**	100 (4x25)

End and intermediate plate, 1 mm thick



orange	**2002-1692**	100 (4x25)
gray	**2002-1691**	100 (4x25)

2002 Series Accessories

Appropriate marking systems: **WMB/Marking Strips/WMB Inline/Mini-WSB**

Push-in type jumper bar, insulated, I_N 25 A, light gray



2-way	**2002-402**	200 (8x25)
3-way	**2002-403**	200 (8x25)
4-way	**2002-404**	200 (8x25)
5-way	**2002-405**	100 (4x25)
:	:	
10-way	**2002-410**	100 (4x25)

For step-down jumpers, see page 31.

Staggered jumper, insulated, I_N 25 A, light gray



2-way	**2002-472**	100 (4x25)
3-way	**2002-473**	100 (4x25)
4-way	**2002-474**	100 (4x25)
5-way	**2002-475**	50 (2x25)
:	:	
12-way	**2002-482**	50 (2x25)

Insulation stop, 5 pcs/strip 200 strips



light gray	**2002-171**	0.25–0.5 mm²
dark gray	**2002-172**	0.75–1 mm²

Test plug adapter, for test plug 4 mm Ø



	2009-174	100 (4x25)
Testing tap, for max. 2.5 mm²/AWG 14		
	2009-182	100 (4x25)

Test plug, with 500 mm cable, 2 mm Ø



red	**210-136**	50 (5x10)

Insulated ferrules, extra long,



for TOPJOB®S terminal blocks,
see page 195

Push-in type jumper bar, insulated, I_N 25 A, light gray



1 - 3	**2002-433**	200 (8x25)
1 - 4	**2002-434**	200 (8x25)
1 - 5	**2002-435**	100 (4x25)
:	:	
1 - 10	**2002-440**	100 (4x25)

Disconnect plug for fuse terminal blocks, suitable when using the fuse terminal block as a disconnect terminal block



orange	**2002-401**	100 (4x25)

TOPJOB®S connector, modular, for jumper contact slot



gray	**2002-511**	100 (4x25)

Spacer module

gray	**2002-549**	100 (4x25)

Protective warning marker, with high-voltage symbol, for 5 terminal blocks



yellow	**2002-115**	100 (4x25)

Operating tool with partially insulated shaft,



type 2, (3.5 x 0.5) mm blade		
	210-720	1

Approval for Ex i applications (pending)
Approval for Ex e II applications (pending)

End plate for fuse terminal blocks, 2 mm thick



orange	**2002-992**	100 (4x25)
gray	**2002-991**	100 (4x25)

Fuse terminal blocks with a width of 6.2 mm can be assembled adjacently.
If there is **no** adjacent fuse terminal block at the end of the assembly, an end plate must be used.

When selecting miniature metric fuses, the maximum power loss listed below shall not be exceeded.
The power loss is determined according to IEC or EN 60947-7-3/VDE 0611-6 at 23 °C.
The temperature rise of the terminal blocks must be checked according to their application and mounting. Higher ambient temperatures place additional strain on fuse cartridges. Therefore, in such applications, the rated current must be reduced if necessary. More details available from the manufacturer.

Miniature metric fuses 5 x 20

Series Item No.	Overload and short circuit protection		Short circuit protection only	
	Individual arrangement	Group arrangement	Individual arrangement	Group arrangement
	Fuse disconnect terminal blocks			
2002-1611 **2002-1811**	1.6 W	1.6 W	2.5 W	2.5 W
2002-1811/....-.... **2002-1611/....-....**	1.6 W	1.6 W	2.5 W	2.5 W

❷ Nominal voltage and current are given by the fuse or blown fuse indicator!
❸ Approvals are available online at: www.wago.com.

For technical explanations and abbreviations, see technical section.

WAGO®

TOPJOB®S
Disconnect/Test and Fuse Terminal Blocks, 4-Conductor
2002 Series

0.25 - 2.5 (4) mm² ❶ | AWG 22 - 12
400 V/6 kV/3
I_N 16 A
Terminal block width 5.2 mm / 0.205 in
10 - 12 mm / 0.43 in
❸ Approvals

0.25 - 2.5 (4) mm² ❶ | AWG 22 - 12
400 V/6 kV/3
I_N 10 A ❷
Terminal block width 5.2 mm / 0.205 in
10 - 12 mm / 0.43 in
❸ Approvals

0.25 - 2.5 (4) mm² ❶ | AWG 22 - 12
400 V/6 kV/3
I_N 6.3 A ❷
Terminal block width 6.2 mm / 0.244 in
10 - 12 mm / 0.43 in
❸ Approvals

❶ Conductor sizes: 0.25 – 4 mm² "s + f-st";
Push-in conductor sizes: 0.75 – 4 mm² "s" and
0.75 – 2.5 mm² "insulated ferrule, 12 mm"

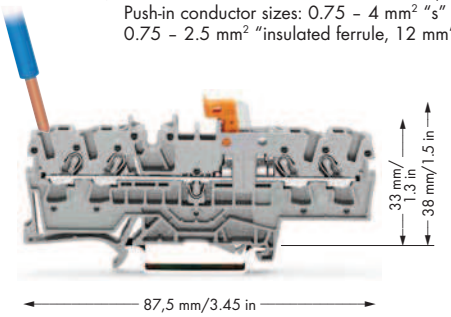

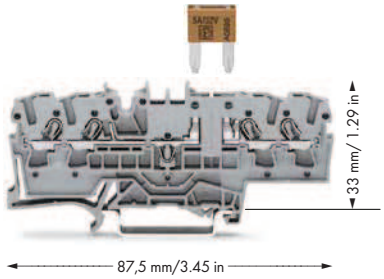

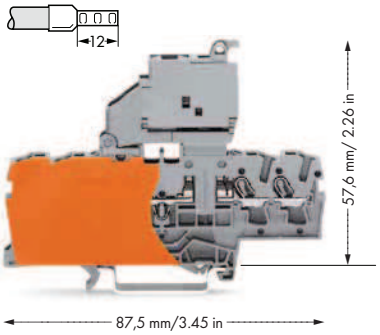

Color	Item No.	Pack. Unit
4-conductor disconnect/test terminal block		
gray	**2002-1871**	50
blue	**2002-1874**	50
orange	**2002-1872**	50
4-conductor through terminal block, same profile		
gray	**2002-1801**	50
blue	**2002-1804**	50
orange	**2002-1802**	50

Color	Item No.	Pack. Unit
4-conductor fuse terminal block,		
for blade-style fuses acc. to DIN 72581-3f,		
ISO 8820-3		
gray	**2002-1881**	50
- Individual arrangement:10 A		
- Block arrangement: 5 A		
Protection against direct contact must be observed for 42		
V and higher voltages!		

	Item No.	Pack. Unit
4-conductor fuse terminal block with end plate,		
withs blown fuse indication by LED, gray		
12 – 30 V ≃	**2002-1811/1000-541**	50
30 – 65 V ≃	**2002-1811/1000-542**	50
120 V ≃	**2002-1811/1000-867**	50
230 V ≃	**2002-1811/1000-836**	50
4-conductor fuse terminal block with end plate,		
without blown fuse indication		
gray	**2002-1811**	50

Item-Specific Accessories

End and intermediate plate, 1 mm thick



orange	**2002-1892**	100 (4x25)
gray	**2002-1891**	100 (4x25)

End and intermediate plate, 1 mm thick



orange	**2002-1892**	100 (4x25)
gray	**2002-1891**	100 (4x25)

2002 Series Accessories

Appropriate marking systems: **WMB/Marking Strips/WMB Inline/Mini-WSB**

Push-in type jumper bar, insulated, I_N 25 A, light gray



2-way	**2002-402**	200 (8x25)
3-way	**2002-403**	200 (8x25)
4-way	**2002-404**	200 (8x25)
5-way	**2002-405**	100 (4x25)
:	:	
10-way	**2002-410**	100 (4x25)

For step-down jumpers, see page 31.

Staggered jumper, light gray, insulated, I_N 25 A

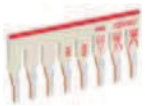

2-way	**2002-472**	100 (4x25)
3-way	**2002-473**	100 (4x25)
4-way	**2002-474**	100 (4x25)
5-way	**2002-475**	50 (2x25)
:	:	
12-way	**2002-482**	50 (2x25)

Insulation stop, 5 pcs/strip 200 strips



light gray	**2002-171**	0.25–0.5 mm²
dark gray	**2002-172**	0.75–1 mm²

Test plug adapter, for test plug 4 mm Ø



	2009-174	100 (4x25)
Testing tap, for max. 2.5 mm²/AWG 14		
	2009-182	100 (4x25)

Test plug, with 500 mm cable, 2 mm Ø



red	**210-136**	50 (5x10)

Double-deck marker carrier,



pivoting		
gray	**2002-121**	50 (2x25)

Push-in type jumper bar, insulated, I_N 25 A, light gray



1 - 3	**2002-433**	200 (8x25)
1 - 4	**2002-434**	200 (8x25)
1 - 5	**2002-435**	100 (4x25)
:	:	
1 - 10	**2002-440**	100 (4x25)

Disconnect plug for fuse terminal blocks, suitable



when using the fuse terminal block
as a disconnect terminal block

orange	**2002-401**	100 (4x25)

TOPJOB®S connector, modular,



for jumper contact slot

gray	**2002-511**	100 (4x25)

Spacer module

gray	**2002-549**	100 (4x25)

Protective warning marker, with high-voltage symbol,



for 5 terminal blocks

yellow	**2002-115**	100 (4x25)

WMB Multi marking system,

10 strips with 10 markers per card,
stretchable 5 – 5.2 mm

plain	**793-5501**	50 (10x5)

Approval for Ex i applications (pending)
Approval for Ex e II applications (pending)

Push-in type jumper bar, insulated, I_N 25 A, light gray



2-way	**2004-402**	200 (8x25)
3-way	**2004-403**	200 (8x25)
4-way	**2004-404**	200 (8x25)
5-way	**2004-405**	100 (4x25)
:	:	
10-way	**2004-410**	100 (4x25)

Push-in type jumper bar, insulated, I_N 25 A, light gray



1 - 3	**2004-433**	200 (8x25)
1 - 4	**2004-434**	200 (8x25)
1 - 5	**2004-435**	100 (4x25)
:	:	
1 - 10	**2004-440**	100 (4x25)

Insulation stop, 5 pcs/strip 200 strips



light gray	**2002-171**	0.25–0.5 mm²
dark gray	**2002-172**	0.75–1 mm²

Insulated ferrules, extra long,



for TOPJOB®S terminal blocks,
see page 195

Operating tool with partially insulated shaft,



type 2, (3.5 x 0.5) mm blade

	210-720	1

End plate for fuse terminal blocks, 2 mm thick



orange	**2002-992**	100 (4x25)
gray	**2002-991**	100 (4x25)

❷ Nominal voltage and current are given by the fuse or blown fuse indicator!
❸ Approvals are available online at: www.wago.com.

For technical explanations and abbreviations, see technical section.