SIEMENS

Data sheet 3UF7110-1AA00-0



CURRENT/VOLTAGE MEASUR. MODULE; SET CURRENT 0,3...3A; VOLTAGE DETECTION UP TO 690V; OVERALL WIDTH 45MM; STRAIGHT-THROUGH CT

product brand name	SIRIUS
Product designation	current/voltage measuring module

General technical data:	
Insulation voltage	
• Rated value	690 V
Vibration resistance	1-6 Hz / 15 mm; 6-500 Hz / 2 g
Surge voltage resistance Rated value	6 000 V
Protection class IP	IP20
Equipment marking	
• acc. to DIN EN 61346-2	F
• acc. to DIN EN 81346-2	F

Electromagnetic compatibility:	
EMC emitted interference	
• acc. to IEC 60947-1	class A
EMI immunity acc. to IEC 60947-1	corresponds to degree of severity 3
Conducted interference due to burst acc. to IEC 61000-4-4	2 kV
Conducted interference due to conductor-earth surge acc. to IEC 61000-4-5	2 kV
Conducted interference due to conductor-conductor surge acc. to IEC 61000-4-5	1 kV
Field-bound parasitic coupling acc. to IEC 61000-4-3	10 V/m

Inputs/ Outputs:	
Number of outputs as contact-affected switching element	0

Changes preserved
© Copyright Siemens AG

Communication/ Protocol:	
Product function Bus communication	No

Installation/ mounting/ dimensions:	
mounting position	any
Mounting type	screw and snap-on mounting
Height	85 mm
Width	45 mm
Depth	66 mm

Connections/ Terminals:	
Type of electrical connection	
• for main current circuit	straight-through transformers
• for auxiliary and control current circuit	screw-type terminals
Product function	
• removable terminal for auxiliary and control circuit	Yes

Ambient conditions:	
Installation altitude at height above sea level maximum	4 000 m
Ambient temperature	
• during operation	-25 ... +60 °C
• during storage	-40 ... +80 °C
• during transport	-40 ... +80 °C
Relative humidity during operation	5 ... 95 %

Safety related data:	
Protection against electrical shock	finger-safe

Main circuit:	
Number of poles for main current circuit	3
Adjustable response value current of the current-dependent overload release	0.3 ... 3 A
Operating voltage	
• with AC	
— at 50 Hz Rated value	110 ... 690 V
— at 60 Hz Rated value	110 ... 690 V
Operating frequency Rated value	50 ... 60 Hz

Control circuit/ Control:	
Type of voltage of the control supply voltage	AC

Certificates/ approvals:

Changes preserved
© Copyright Siemens AG

General Product Approval				EMC	For use in hazardous locations
CCC	CSA		UL	C-TICK	ATEX

For use in hazardous locations	Test Certificates		Shipping Approval		
Explosion Protection Certificate	Type Test Certificates/Test Report	Special Test Certificate	ABS	DNV	GL

other				
Declaration of Conformity	Confirmation	PROFISafe-Certification	Profibus	PROFINET-Certification

Further information

Information- and Downloadcenter (Catalogs, Brochures,…)
http://www.siemens.com/industrial-controls/catalogs

Industry Mall (Online ordering system)
http://www.siemens.com/industrymall

Cax online generator
http://support.automation.siemens.com/WW/CAXorder/default.aspx?lang=en&mlfb=3UF71101AA000

Service&Support (Manuals, Certificates, Characteristics, FAQs,...)
https://support.industry.siemens.com/cs/ww/en/ps/3UF71101AA000

Image database (product images, 2D dimension drawings, 3D models, device circuit diagrams, EPLAN macros, ...)
http://www.automation.siemens.com/bilddb/cax_de.aspx?mlfb=3UF71101AA000&lang=en

Changes preserved
© Copyright Siemens AG

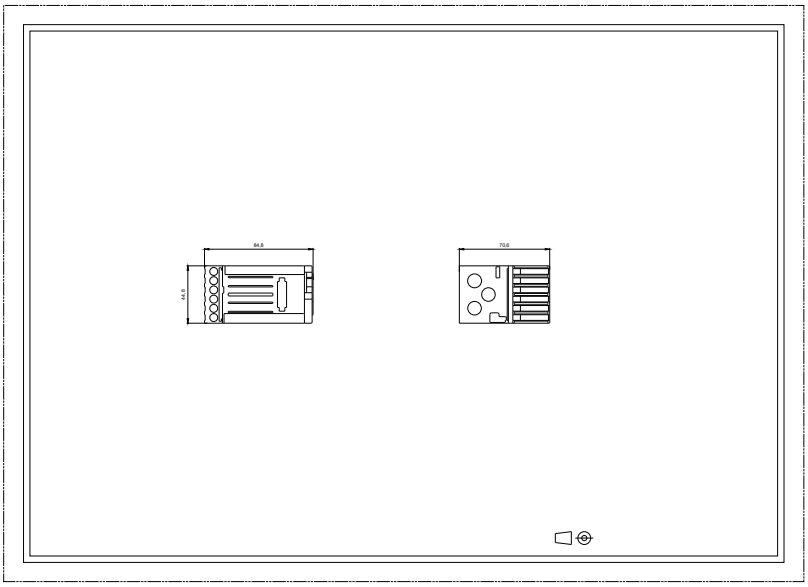

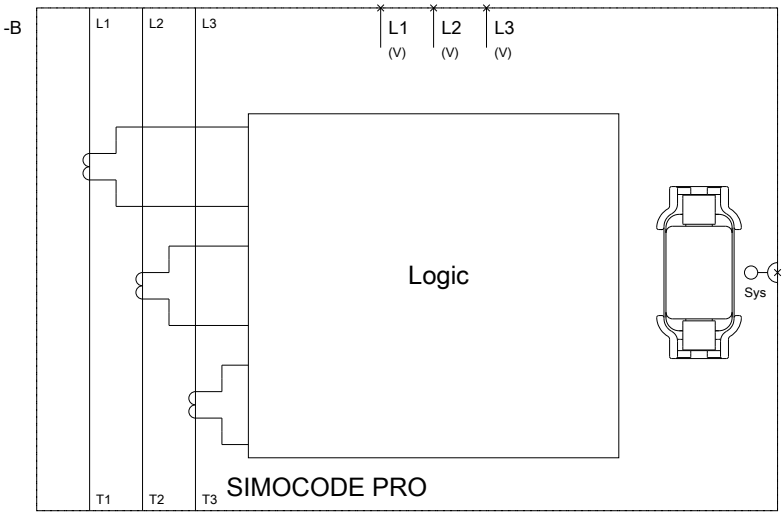

last modified: 24.04.2015

Changes preserved
© Copyright Siemens AG