# Karta danych technicznych
# Redukcja, gwint metryczny

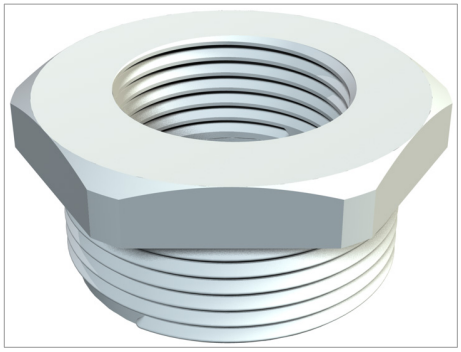

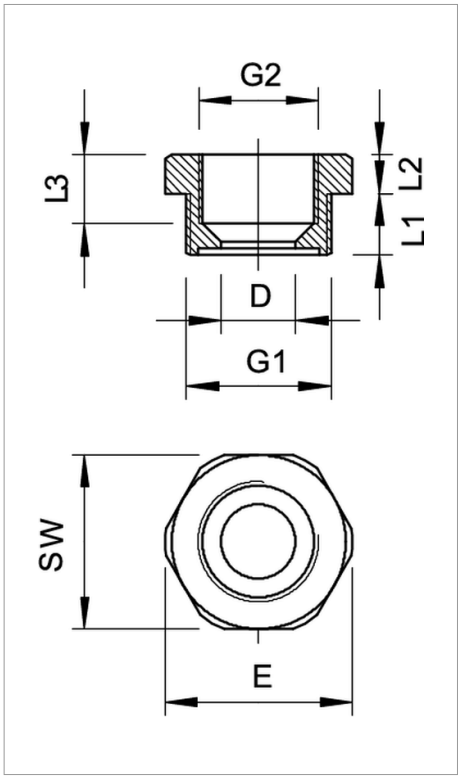


Redukcja, z wewnętrznym i zewnętrznym gwintem metrycznym.

| Typ | Gwint zewnętrzny | Gwint wewnętrzny | Kolor | SW mm | Opakowanie 3 (wersja karton) | Opak. szt. | Waga kg/100 szt. | Nr kat. |
|---|---|---|---|---|---|---|---|---|
| 107 R M20-12 PA | M20 | M12 | jasnoszary; RAL 7035 | 24 | 1200 | 100 | 0.500 | 2030616 |
| 107 R M20-16 PA | M20 | M16 | jasnoszary; RAL 7035 | 24 | 1200 | 100 | 0.700 | 2030619 |
| 107 R M25-12 PA | M25 | M12 | jasnoszary; RAL 7035 | 32 | 1200 | 100 | 0.850 | 2030624 |
| 107 R M25-16 PA | M25 | M16 | jasnoszary; RAL 7035 | 32 | 1200 | 100 | 0.850 | 2030626 |
| 107 R M25-20 PA | M25 | M20 | jasnoszary; RAL 7035 | 32 | 1200 | 100 | 0.650 | 2030628 |
| 107 R M32-12 PA | M32 | M12 | jasnoszary; RAL 7035 | 36 | 600 | 50 | 1.200 | 2030632 |
| 107 R M32-16 PA | M32 | M16 | jasnoszary; RAL 7035 | 36 | 600 | 50 | 1.100 | 2030634 |
| 107 R M32-20 PA | M32 | M20 | jasnoszary; RAL 7035 | 36 | 600 | 50 | 1.050 | 2030637 |
| 107 R M32-25 PA | M32 | M25 | jasnoszary; RAL 7035 | 36 | 600 | 50 | 1.000 | 2030640 |
| 107 R M40-16 PA | M40 | M16 | jasnoszary; RAL 7035 | 46 | 600 | 50 | 2.000 | 2030643 |
| 107 R M40-20 PA | M40 | M20 | jasnoszary; RAL 7035 | 46 | 600 | 50 | 1.850 | 2030646 |
| 107 R M40-25 PA | M40 | M25 | jasnoszary; RAL 7035 | 46 | 600 | 50 | 1.950 | 2030649 |
| 107 R M40-32 PA | M40 | M32 | jasnoszary; RAL 7035 | 46 | 600 | 50 | 1.400 | 2030652 |
| 107 R M50-20 PA | M50 | M20 | jasnoszary; RAL 7035 | 55 | 300 | 25 | 2.300 | 2030655 |
| 107 R M50-25 PA | M50 | M25 | jasnoszary; RAL 7035 | 55 | 300 | 25 | 2.250 | 2030659 |
| 107 R M50-32 PA | M50 | M32 | jasnoszary; RAL 7035 | 55 | 300 | 25 | 2.200 | 2030661 |
| 107 R M50-40 PA | M50 | M40 | jasnoszary; RAL 7035 | 55 | 300 | 25 | 2.050 | 2030664 |

| | | | | | | | | |
|---|---|---|---|---|---|---|---|---|
| 107 R M63-25 PA | M63 | M25 | jasnoszary; RAL 7035 | 68 | 300 | 25 | 3.050 | 2030667 |
| 107 R M63-32 PA | M63 | M32 | jasnoszary; RAL 7035 | 68 | 300 | 25 | 3.070 | 2030670 |
| 107 R M63-40 PA | M63 | M40 | jasnoszary; RAL 7035 | 68 | 300 | 25 | 3.100 | 2030673 |
| 107 R M63-50 PA | M63 | M50 | jasnoszary; RAL 7035 | 68 | 300 | 25 | 3.000 | 2030675 |

PA poliamid

zł/10

# Legenda

M gwint metryczny

 bezhalogenowy: bez chloru, fluoru i bromu

CE Oświadczenie o zgodności z dyrektywami WE