SIEMENS

Data sheet 3UF7010-1AB00-0



Figure similar

BASIC UNIT 2 SIMOCODE PRO V; PROFIBUS DP INTERFACE 12 MBIT/S, RS485; 4I/3O FREELY PARAMETERIZABLE; US: DC 24V; THERMISTOR MOTOR PROTECTION; RELAY OUTPUTS MONOSTABLE; EXPANDABLE BY EXPANSION MODULES

product brand name	SIRIUS
Product designation	SIMOCODE pro V Motor Management System
Design of the product	basic unit 2

General technical data:	
Active power loss total typical	7 W
Insulation voltage	
• with degree of pollution 3 Rated value	300 V
• Rated value	300 V
Shock resistance	
• acc. to IEC 60068-2-27	15g / 11 ms
Vibration resistance	1-6 Hz / 15 mm; 6-500 Hz / 2 g
Surge voltage resistance Rated value	4 000 V
Mechanical service life (switching cycles)	
• typical	10 000 000
Electrical endurance (switching cycles)	
• typical	100 000
Protection class IP	IP20
Equipment marking	
• acc. to DIN EN 61346-2	F
• acc. to DIN EN 81346-2	F

Electromagnetic compatibility:	
EMC emitted interference	
• acc. to IEC 60947-1	class A
EMI immunity acc. to IEC 60947-1	corresponds to degree of severity 3

Changes preserved
© Copyright Siemens AG

Conducted interference due to burst acc. to IEC 61000-4-4	2 kV (power ports) / 1 kV (signal ports)
Conducted interference due to conductor-earth surge acc. to IEC 61000-4-5	2 kV
Conducted interference due to conductor-conductor surge acc. to IEC 61000-4-5	1 kV
Conducted interference due to high-frequency radiation acc. to IEC 61000-4-6	10 V
Field-bound parasitic coupling acc. to IEC 61000-4-3	10 V/m
Electrostatic discharge acc. to IEC 61000-4-2	6 kV contact discharge / 8 kV air discharge

Inputs/ Outputs:	
Number of inputs	4
• for thermistor connection	1
Number of digital inputs	
• with a common reference potential	4
Digital input version	
• Type 1 acc. to IEC 61131	Yes
Number of outputs	3
Number of outputs as contact-affected switching element	3
Number of semiconductor outputs	0

Motor protection functions:	
Product function overload protection	Yes
Product function Evaluation of thermistor motor protection	Yes

Motor control functions:	
Product function	
• parameterizable overload relay	Yes
• circuit breaker control	Yes
• direct start	Yes
• reverse starting	Yes
• star-delta circuit	Yes
• star-delta reversing circuit	Yes
• Dahlander circuit	Yes
• Dahlander reversing circuit	Yes
• pole-changing switch circuit	Yes
• pole-changing switch reversing circuit	Yes
• Slide control	Yes
• valve control	Yes

Communication/ Protocol:	
Product function Bus communication	Yes
Protocol is supported	

Changes preserved
© Copyright Siemens AG

• PROFIBUS DP protocol	Yes
• PROFINET IO protocol	No
• PROFIsafe protocol	Yes
• LLDP	No
• Address Resolution Protocol (ARP)	No
• SNMP	No
• HTTPS	No
• OPC UA Server	No
• NTP	No
• Media Redundancy Protocol (MRP)	No
Product function	
• web server	No
• shared device	No
• at the Ethernet interface Autonegotiation	No
• at the Ethernet interface Autosensing	No
• MRRT redundancy procedure	No
• is supported PROFINET system redundancy	No
• supports PROFIenergy measured values	No
• supports PROFIenergy shutdown	No
Type of electrical connection of the communication interface	D-sub / terminal

Installation/ mounting/ dimensions:

mounting position	any
Mounting type	screw and snap-on mounting
Height	111 mm
Width	45 mm
Depth	124 mm

Connections/ Terminals:

Type of electrical connection	
• for auxiliary and control current circuit	screw-type terminals
Product function	
• removable terminal for auxiliary and control circuit	Yes
Type of connectable conductor cross-section	
• solid	1x (0.5 ... 4.0 mm²), 2x (0.5 ... 2.5 mm²)
• finely stranded with core end processing	1x (0.5 ... 2.5 mm²), 2x (0.5 ... 1.5 mm²)
• for AWG conductors	
— solid	1x (20 ... 12), 2x (20 ... 14)
— stranded	1x (20 ... 14), 2x (20 ... 16)
Tightening torque	
• with screw-type terminals	0.8 ... 1.2 N·m

Changes preserved
© Copyright Siemens AG

Tightening torque [lbf·in]	
• with screw-type terminals	7 ... 10.3 lbf·in
Ambient conditions:	
Installation altitude at height above sea level maximum	4 000 m
Ambient temperature	
• during operation	-25 ... +60 °C
• during storage	-40 ... +80 °C
• during transport	-40 ... +80 °C
• at installation altitude ≤ 3000m during operation maximum	50 °C
• at installation altitude ≤ 4000 m during operation maximum	40 °C
Relative humidity during operation	5 ... 95 %
Contact rating of the auxiliary contacts acc. to UL	B300 / R300
Short-circuit:	
Design of short-circuit protection per output	Fuse links: gG 6 A, quick-response 10 A (IEC 60947-5-1), miniature circuit-breaker C char.: 1.6 A (IEC 60947-5-1) or 6 A (I_K < 500 A)
Safety related data:	
Protection against electrical shock	finger-safe
Galvanic isolation:	
Design of the electrical isolation	Protective separation in accordance with IEC 60947-1 for all circuits
Main circuit:	
Operating voltage	
• for DC Rated value	
— maximum	24 V
— minimum	24 V
Control circuit/ Control:	
Type of voltage of the control supply voltage	DC
Control supply voltage for DC	
• Rated value	24 ... 24 V
Control supply voltage 1	
• for DC Rated value	24 V
Response value of thermoresistor	3 400 ... 3 800 Ω
Supply voltage:	
Type of voltage of the supply voltage	DC
Certificates/ approvals:	

Changes preserved
© Copyright Siemens AG

General Product Approval				EMC	For use in hazardous locations
CCC	CSA		UL	C-TICK	ATEX

For use in hazardous locations	Test Certificates			Shipping Approval	
Explosion Protection Certificate	Special Test Certificate	Declaration of the Compliance with the order	Type Test Certificates/Test Report	ABS	DNV

Shipping Approval	other				
GL	Declaration of Conformity	Confirmation	PROFINET-Certification	Profibus	PROFISafe-Certification

Further information

Information- and Downloadcenter (Catalogs, Brochures,…)
http://www.siemens.com/industrial-controls/catalogs

Industry Mall (Online ordering system)
http://www.siemens.com/industrymall

Cax online generator
http://support.automation.siemens.com/WW/CAXorder/default.aspx?lang=en&mlfb=3UF70101AB000

Service&Support (Manuals, Certificates, Characteristics, FAQs,...)
https://support.industry.siemens.com/cs/ww/en/ps/3UF70101AB000

Image database (product images, 2D dimension drawings, 3D models, device circuit diagrams, EPLAN macros, ...)
http://www.automation.siemens.com/bilddb/cax_de.aspx?mlfb=3UF70101AB000&lang=en

Changes preserved
© Copyright Siemens AG

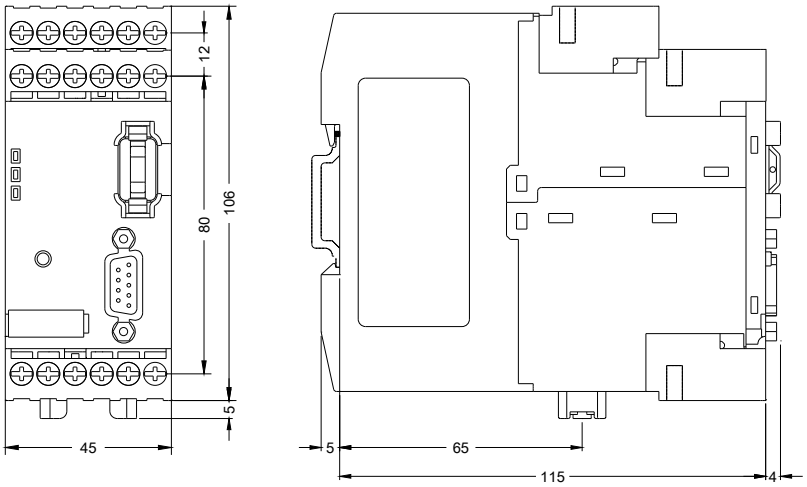

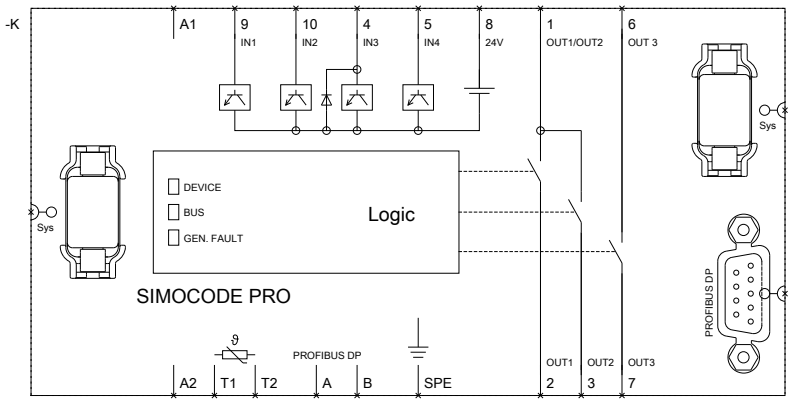

last modified: 24.04.2015

Changes preserved
© Copyright Siemens AG