SIEMENS

Data sheet 3UF7920-0AA00-0



DOOR ADAPTER FOR MOUNTING IN CUBICLE DOOR; MAKES THE SYSTEM INTERFACE EASILY ACCESSABLE AT THE CUBICLE DOOR

General technical data:	
product brand name	SIRIUS
Product designation	door adapter
Design of the product	<kein Wert>
Protection class IP	IP54
Ambient temperature	
• during storage	-40 ... +80 °C
• during operation	-25 ... +60 °C
• during transport	-40 ... +80 °C
Relative humidity during operation	<kein Wert> ... <kein Wert>
Equipment marking acc. to DIN 40719 extended according to IEC 204-2 acc. to IEC 750	<kein Wert>
Equipment marking acc. to DIN EN 61346-2	<kein Wert>

Certificates/ approvals:

Changes preserved
© Copyright Siemens AG

General Product Approval				EMC	Test Certificates
CCC	CSA		UL	C-TICK	Type Test Certificates/Test Report

Test Certificates	Shipping Approval			other	
Special Test Certificate	ABS	DNV	GL	Confirmation	Profibus

other	
PROFINET-Certification	PROFISafe-Certification

Further information

Information- and Downloadcenter (Catalogs, Brochures,…)
http://www.siemens.com/industrial-controls/catalogs

Industry Mall (Online ordering system)
http://www.siemens.com/industrymall

Cax online generator
http://support.automation.siemens.com/WW/CAXorder/default.aspx?lang=en&mlfb=3UF79200AA000

Service&Support (Manuals, Certificates, Characteristics, FAQs,...)
https://support.industry.siemens.com/cs/ww/en/ps/3UF79200AA000

Image database (product images, 2D dimension drawings, 3D models, device circuit diagrams, EPLAN macros, ...)
http://www.automation.siemens.com/bilddb/cax_de.aspx?mlfb=3UF79200AA000&lang=en

Changes preserved
© Copyright Siemens AG

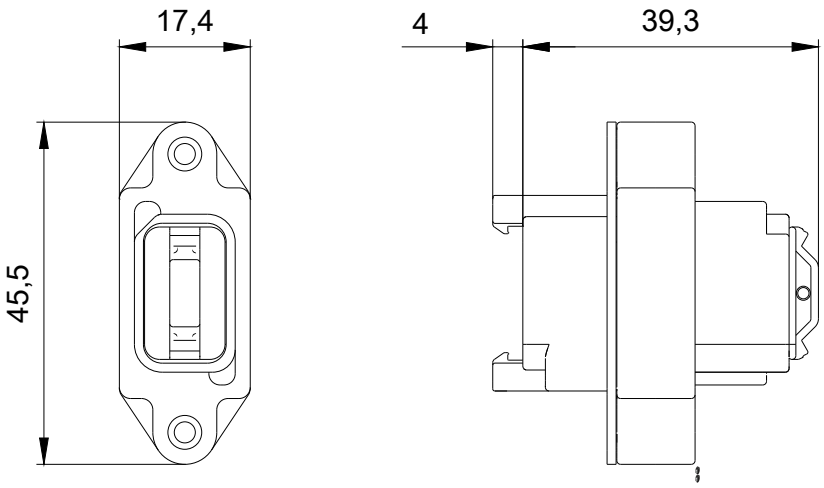

Changes preserved
© Copyright Siemens AG