SIEMENS

Data sheet 3TC44 17-0AB4

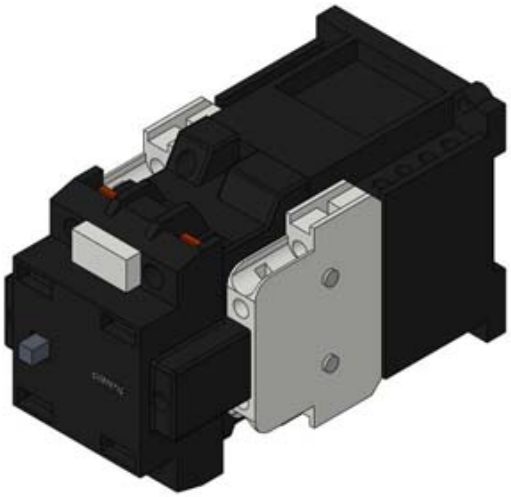

CONTACTOR, SIZE 2, 2-POLE DC-3 AND 5, 32A AUXILIARY SWITCH 22 (2NO+2NC) DC OPERATION DC 24V WORKING RANGE 0.85 - 1.1 UN

General technical data:	
Size of contactor	2
Number of poles	2
Equipment marking acc. to DIN 40719 extended according to IEC 204-2 acc. to IEC 750	K
Equipment marking acc. to DIN EN 61346-2	Q
Protection class IP	IP00
Ambient temperature during operation	-25 ... +55 °C

Control circuit/ Control:	
Type of voltage	DC
Control supply voltage	
• for DC Rated value	24 ... 24 V

Main circuit:	
Number of NO contacts for main contacts	2
Number of NC contacts for main contacts	0
Operating current	
• at DC-3 at DC-5	
— at 440 V Rated value	29 A
— at 220 V Rated value	32 A
— at 600 V Rated value	21 A
— at 750 V Rated value	7.5 A
Operating power	
• at DC-3 at DC-5	
— at 110 V Rated value	2.5 kW

Changes preserved
© Copyright Siemens AG

— at 220 V Rated value	5 kW
— at 440 V Rated value	9 kW
— at 600 V Rated value	9 kW
— at 750 V Rated value	4 kW

Auxiliary circuit:

Identification number and letter for switching elements	22
Number of NO contacts for auxiliary contacts	2
Number of NC contacts for auxiliary contacts	2
Number of CO contacts for auxiliary contacts	0

Connections/ Terminals:

Type of electrical connection for main current circuit	screw-type terminals
Type of electrical connection for auxiliary and control current circuit	screw-type terminals

Mechanical data:

Mounting type	screw and snap-on mounting onto 35 mm standard mounting rail according to DIN EN 50022
Mounting type Side-by-side mounting	Yes
Width	70 mm
Height	85 mm
Depth	145 mm

Certificates/ approvals:

General Product Approval				Functional Safety/Safety of Machinery	Test Certificates
CCC	CSA	UL	EAC	Type Examination Certificate	Special Test Certificate

Shipping Approval	other	
RMRS	Declaration of Conformity	other

Further information

Information- and Downloadcenter (Catalogs, Brochures,…)
http://www.siemens.com/industrial-controls/catalogs

Industry Mall (Online ordering system)
http://www.siemens.com/industrymall

Changes preserved
© Copyright Siemens AG

Cax online generator
http://support.automation.siemens.com/WW/CAXorder/default.aspx?lang=en&mlfb=3TC44170AB4

Service&Support (Manuals, Certificates, Characteristics, FAQs,...)
https://support.industry.siemens.com/cs/ww/en/ps/3TC44170AB4

Image database (product images, 2D dimension drawings, 3D models, device circuit diagrams, EPLAN macros, ...)
http://www.automation.siemens.com/bilddb/cax_de.aspx?mlfb=3TC44170AB4&lang=en

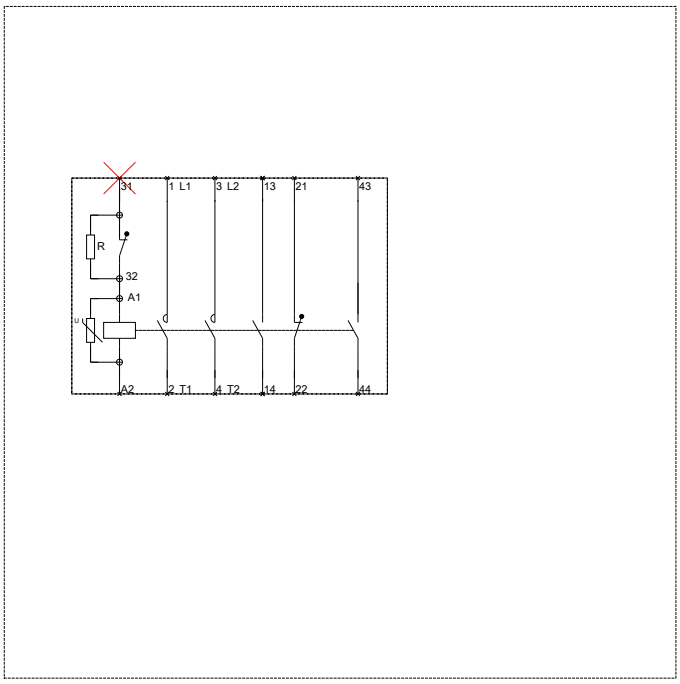

last modified: 05.05.2015

Changes preserved
© Copyright Siemens AG