SIEMENS

## Data sheet 3SE5232-0HK60



SIRIUS POSITION SWITCH; PLASTIC HOUSING ACC. TO EN50047, 31MM DEVICE CONNECTION 1X M20X1.5); 1NO/1NC SNAP-ACTION CONTACTS INTEGRATED (NOT REPLACEABLE) ADJUSTABLE LENGTH OF ROLLER LEVER FORM-FIT (HOLE PITCH) RIGHT/LEFT SIDE ADJUSTABLE W. PLASTIC ROLLER 19MM

| | |
|---|---|
| **Product designation** | standard position switch |
| **Manufacturer article number** | |
| • of the supplied basic switch | 3SE5232-0HC05 |
| • of the supplied actuator head for position switches | 3SE5000-0AK00 |
| • of the supplied operating lever | 3SE5000-0AA60 |

| General technical data: | |
|---|---|
| **Product function** | |
| • positive opening | Yes |
| **Insulation voltage** | |
| • Rated value | 400 V |
| **Degree of pollution** | class 3 |
| **Vibration resistance** | |
| • acc. to IEC 60068-2-6 | 0.35 mm/5g |
| **Surge voltage resistance Rated value** | 6 kV |
| **Mechanical service life (switching cycles)** | |
| • typical | 15 000 000 |
| **Electrical endurance (switching cycles)** | |
| • at AC-15 at 230 V typical | 100 000 |
| **Electrical endurance (switching cycles) with contactor 3RH11, 3RT1016, 3RT1017, 3RT1024, 3RT1025, 3RT1026 typical** | 10 000 000 |
| **Electrical operating cycles in one hour with contactor 3RH11, 3RT1016, 3RT1017, 3RT1024, 3RT1025, 3RT1026** | 6 000 |
| **Thermal current** | 6 A |


Changes preserved
© Copyright Siemens AG

| | |
|---|---|
| **Material of the enclosure of the switch head** | plastic |
| **Protection class IP** | IP65 |
| **Equipment marking** | |
| • acc. to DIN EN 61346-2 | B |
| • acc. to DIN EN 81346-2 | B |
| **Active principle** | mechanical |
| **Repeat accuracy** | 0.05 mm |
| **Explosion protection category for dust** | none |
| **Explosion protection category for gas** | none |
| **Minimum actuating torque in activation direction** | 0.25 N·m |
| **Operating current at AC-15** | |
| • at 230 V Rated value | 6 A |
| • at 400 V Rated value | 4 A |

| Enclosure: | |
|---|---|
| **Design of the housing** | block, narrow |
| **Material of the enclosure** | plastic |
| **Coating of the enclosure** | Other types |
| **Design of the housing acc. to standard** | Yes |

| Drive Head: | |
|---|---|
| **Design of the operating mechanism** | metal lever, adjustable length with closing shape, 100 mm long, plastic roller 19 mm |
| **Standard-compliant actuator head** | EN 50047, design A |
| **Shape of the switch head** | roller |
| **Design of the switching function** | positive opening, integrated |

| Connections/ Terminals: | |
|---|---|
| **Type of electrical connection** | screw-type terminals |
| **Type of connectable conductor cross-section** | |
| • solid | 1x (0.5 ... 1.5 mm²), 2x (0.5 ... 0.75 mm²) |
| • finely stranded with core end processing | 1x (0.5 ... 1.5 mm²), 2x (0.5 ... 0.75 mm²) |
| • finely stranded without core end processing | 1x (0.5 ... 1.5 mm²), 2x (0.5 ... 0.75 mm²) |
| • for AWG conductors | |
| — solid | 1x (20 ... 16), 2x (20 ... 18) |
| — stranded | 1x (20 ... 16), 2x (20 ... 18) |

| Mechanical data: | |
|---|---|
| **Cable entry type** | 1x (M20 x 1.5) |

| Communication/ Protocol: | |
|---|---|
| **Design of the interface** | without |

| Ambient conditions: | |
|---|---|
| **Ambient temperature** | |
| • during operation | -25 ... +85 °C |


Changes preserved
© Copyright Siemens AG

| | |
|---|---|
| • during storage | -40 ... +90 °C |

## Installation/ mounting/ dimensions:

| | |
|---|---|
| **mounting position** | any |
| **Mounting type** | screw fixing |

## Certificates/ approvals:

| General Product Approval | Functional Safety/Safety of Machinery | Declaration of Conformity | Test Certificates |
|---|---|---|---|
| CSA UL EAC | Type Examination Certificate | EG-Konf. | Special Test Certificate |

### other

Confirmation

## Further information

**Information- and Downloadcenter (Catalogs, Brochures,…)**
http://www.siemens.com/industrial-controls/catalogs

**Industry Mall (Online ordering system)**
http://www.siemens.com/industrymall

**Cax online generator**
http://support.automation.siemens.com/WW/CAXorder/default.aspx?lang=en&mlfb=3SE52320HK60

**Service&Support (Manuals, Certificates, Characteristics, FAQs,...)**
https://support.industry.siemens.com/cs/ww/en/ps/3SE52320HK60

**Image database (product images, 2D dimension drawings, 3D models, device circuit diagrams, EPLAN macros, ...)**
http://www.automation.siemens.com/bilddb/cax_de.aspx?mlfb=3SE52320HK60&lang=en


Changes preserved
© Copyright Siemens AG

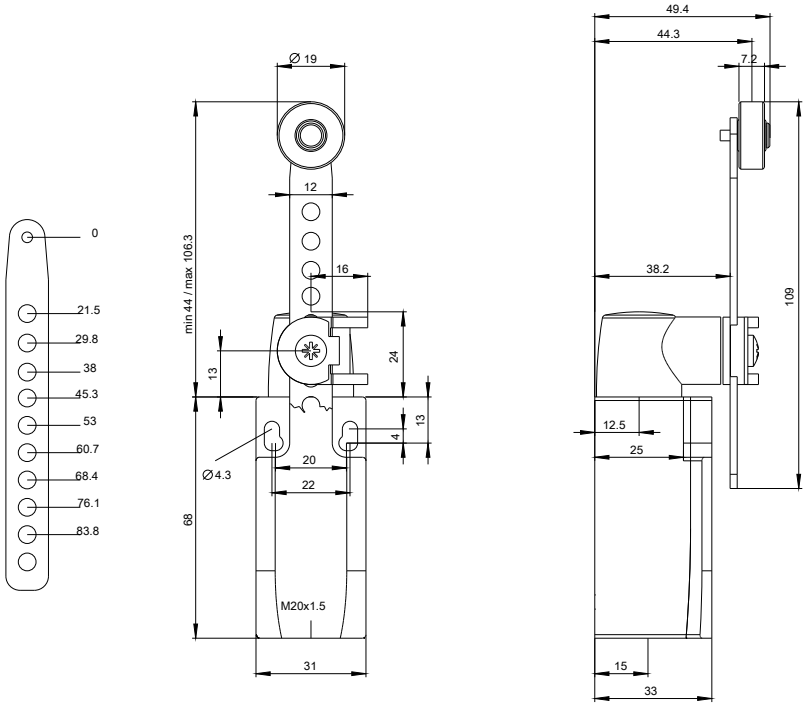


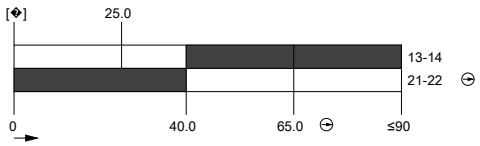


**last modified:** 22.05.2015


Changes preserved
© Copyright Siemens AG