SIEMENS

Data sheet 3SE5232-0BK21



SIRIUS POSITION SWITCH PLASTIC HOUSING ACC. TO EN50047, 31MM DEVICE CONNECTION 1X(M20X1.5); 1NO/1NC SLOW-ACTION CONTACTS ROLLER LEVER, 21MM LONG RIGHT/LEFT ADJUSTABLE W. PLASTIC ROLLER 19MM

Product designation	standard position switch
Manufacturer article number	
• of the supplied basic switch	3SE5232-0BC05
• of the supplied actuator head for position switches	3SE5000-0AK00
• of the supplied operating lever	3SE5000-0AA21
• of the supplied switching contacts	3SE5000-0BA00
• of the supplied empty enclosure with cover	3SE5232-0AC05

General technical data:	
Product function	
• positive opening	Yes
Insulation voltage	
• Rated value	400 V
Degree of pollution	class 3
Vibration resistance	
• acc. to IEC 60068-2-6	0.35 mm/5g
Surge voltage resistance Rated value	6 kV
Mechanical service life (switching cycles)	
• typical	15 000 000
Electrical endurance (switching cycles)	
• at AC-15 at 230 V typical	100 000
Electrical endurance (switching cycles) with contactor 3RH11, 3RT1016, 3RT1017, 3RT1024, 3RT1025, 3RT1026 typical	10 000 000

Changes preserved
© Copyright Siemens AG

Electrical operating cycles in one hour with contactor 3RH11, 3RT1016, 3RT1017, 3RT1024, 3RT1025, 3RT1026	6 000
Thermal current	6 A
Material of the enclosure of the switch head	plastic
Protection class IP	IP65
Equipment marking	
• acc. to DIN EN 61346-2	B
• acc. to DIN EN 81346-2	B
Active principle	mechanical
Repeat accuracy	0.05 mm
Explosion protection category for dust	none
Explosion protection category for gas	none
Minimum actuating torque in activation direction	0.25 N·m
Operating current at AC-15	
• at 230 V Rated value	3 A

Enclosure:	
Design of the housing	block, narrow
Material of the enclosure	plastic
Coating of the enclosure	Other types
Design of the housing acc. to standard	Yes

Drive Head:	
Design of the operating mechanism	metal lever, 21 mm long, straight, plastic roller 19 mm
Standard-compliant actuator head	EN 50047, design A
Shape of the switch head	roller
Design of the switching function	positive opening

Connections/ Terminals:	
Type of electrical connection	screw-type terminals
Type of connectable conductor cross-section	
• solid	1x (0.5 ... 1.5 mm²), 2x (0.5 ... 0.75 mm²)
• finely stranded with core end processing	1x (0.5 ... 1.5 mm²), 2x (0.5 ... 0.75 mm²)
• finely stranded without core end processing	1x (0.5 ... 1.5 mm²), 2x (0.5 ... 0.75 mm²)
• for AWG conductors	
— solid	1x (20 ... 16), 2x (20 ... 18)
— stranded	1x (20 ... 16), 2x (20 ... 18)

Mechanical data:	
Cable entry type	1x (M20 x 1.5)

Communication/ Protocol:	
Design of the interface	without

Ambient conditions:	
Ambient temperature	

Changes preserved
© Copyright Siemens AG

• during operation	-25 ... +85 °C
• during storage	-40 ... +90 °C

Installation/ mounting/ dimensions:

mounting position	any
Mounting type	screw fixing

Certificates/ approvals:

General Product Approval			Functional Safety/Safety of Machinery	Declaration of Conformity	Test Certificates
CSA	UL	EAC	Type Examination Certificate	EG-Konf.	Special Test Certificate

other

Confirmation

Further information

Information- and Downloadcenter (Catalogs, Brochures,…)
http://www.siemens.com/industrial-controls/catalogs

Industry Mall (Online ordering system)
http://www.siemens.com/industrymall

Cax online generator
http://support.automation.siemens.com/WW/CAXorder/default.aspx?lang=en&mlfb=3SE52320BK21

Service&Support (Manuals, Certificates, Characteristics, FAQs,...)
https://support.industry.siemens.com/cs/ww/en/ps/3SE52320BK21

Image database (product images, 2D dimension drawings, 3D models, device circuit diagrams, EPLAN macros, ...)
http://www.automation.siemens.com/bilddb/cax_de.aspx?mlfb=3SE52320BK21&lang=en

Changes preserved
© Copyright Siemens AG

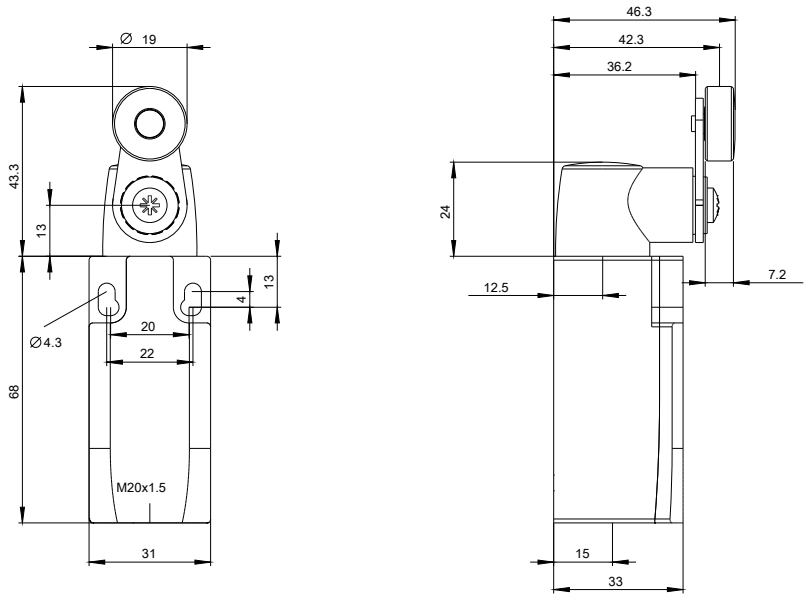

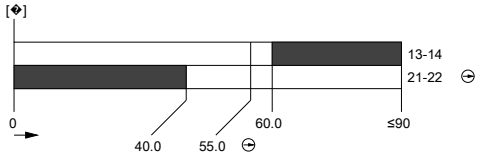

last modified: 22.05.2015

Changes preserved
© Copyright Siemens AG