– Handling –
Disconnect Lock

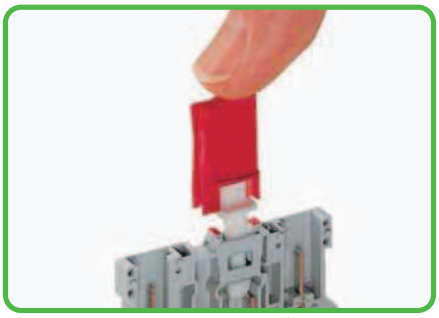

The lock is put on the disconnect tab of the disconnect terminal block (the picture shows a 769 Series 2-pin disconnect carrier terminal block)

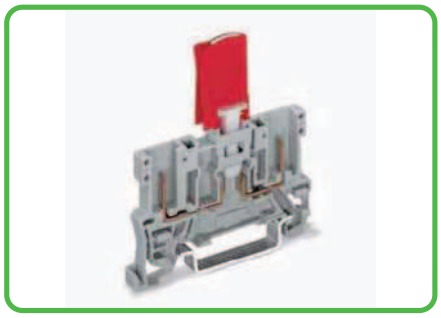

The disconnect lock is in position.

❶ 400 V = rated voltage
6 kV = rated surge voltage
3 = pollution degree
(also see Section 14)

❷ Strip length, see packaging or instructions.

❸ See application notes for:
Insulation stop, page 199
Comb-style jumper bar, page 200
Operating tool, page 200

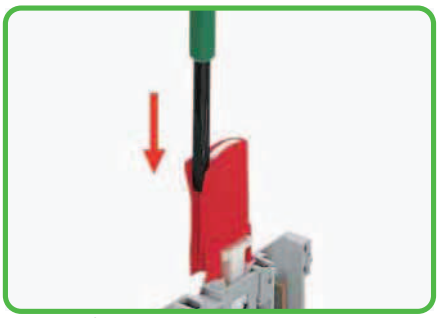

Unlocking of disconnect lock.



Removing of disconnect lock.

Double safety
The disconnect tab has been designed for maximum operational safety.

As soon as the disconnecting tab is in the disconnect position, it can be protected against unintentional reconnection by using the disconnect lock.
Only through dedicated effort and use of a tool, can the disconnect lock be removed, and the circuit reconnected.

Features/Benefits:
- Easy handling
- The disconnect lock can be easily installed
- Clear identification of disconnect tab position
- Increases safety
- Dedicated effort is required to reconnect the circuit

281 Series Accessories

Appropriate marking systems
(see Section 13)

Insulation stop, ❸			
	5 pcs/strip,		
	0.08 - 0.2 mm² "s" (0.14 mm² "f-st")		
	white	**281-470**	200 (8x25)
Insulation stop, ❸			
	5 pcs/strip,		
	0.25 - 0.5 mm²		
	light gray	**281-471**	200 (8x25)
Insulation stop, ❸			
	5 pcs/strip,		
	0.25 - 1.5 mm²		
	dark gray	**281-472**	200 (8x25)
Comb-style jumper bar, insulated, ❸			
	I_N = I_N terminal block		
	2-way	**281-482**	100 (4x25)
	3-way	**281-483**	100 (4x25)
Alternate comb-style jumper bar,			
	insulated,		
	I_N = I_N terminal block		
	2-way	**281-492**	100 (4x25)
Operating tool, of insulating material			
	2-way	**280-432**	1
	3-way	**280-433**	1
Protective warning marker,			
	with high-voltage symbol, black,		
	for 5 terminal blocks		
	yellow	**281-415**	100 (4x25)
Disconnect lock,			
	for disconnect tab used on 280/281 and		
	769 Series disconnect terminal blocks		
	red	**709-170**	200 (8x25)
Test socket,			
	insulated,		
	2 mm Ø		
	red	**209-107**	100 (2x50)
Test socket,			
	insulated,		
	2.3 mm Ø		
	yellow	**209-108**	100 (2x50)
Test plug,			
	with 500 mm cable,		
	2 mm Ø		
	red	**210-136**	50
Test plug,			
	with 500 mm cable,		
	2.3 mm Ø		
	yellow	**210-137**	50

Disconnect Terminal Blocks for Test and Measurement of Transformer Circuits, 282 Series

Preparing the shorting path for the current transformer



Insertion of insulated, touchproof adjacent jumpers into the protected shorting position.

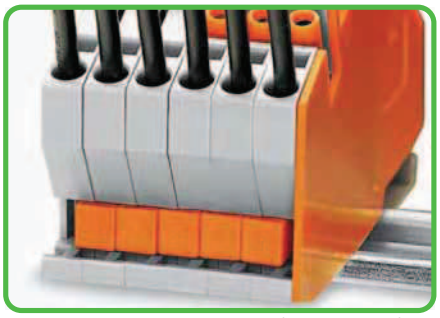

Terminal strip permanently prepared for current transformer circuits.

Lock-out

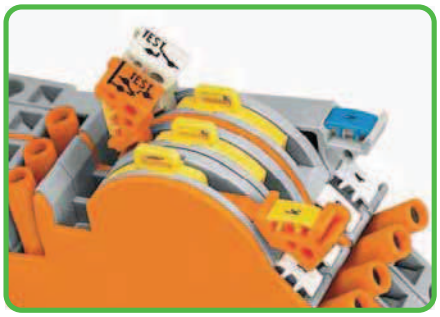

Lock-out has "snap" action into two notched positions preventing accidental operation of the disconnect link.

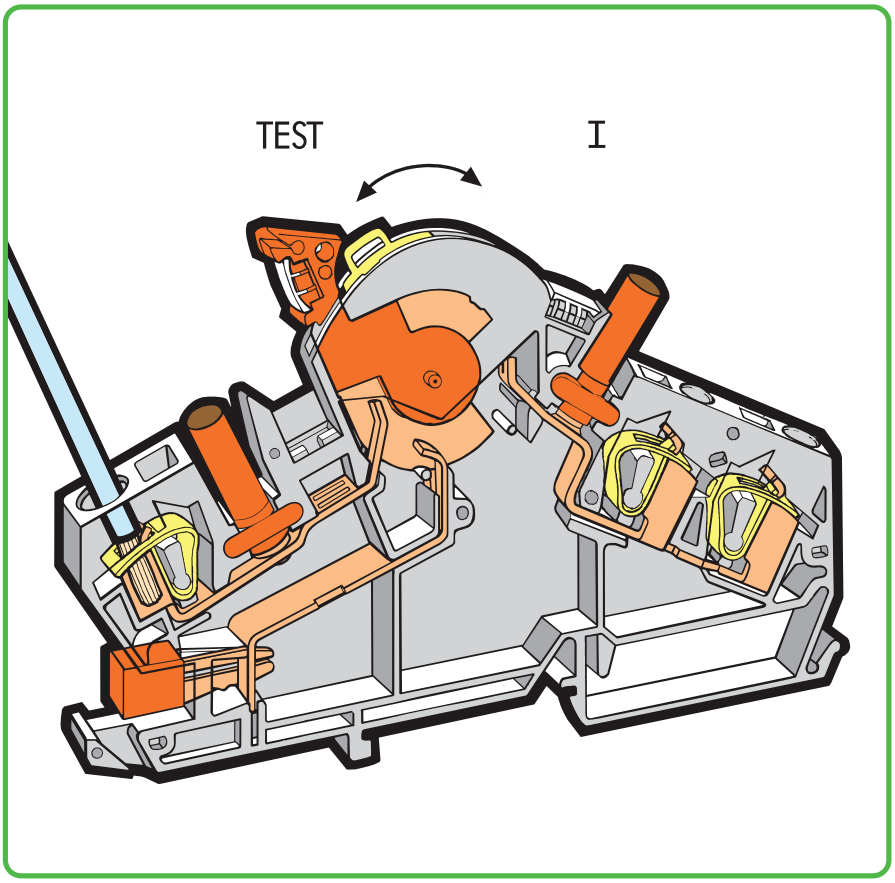

Locking cover for disconnect links



Transparent locking cover for 1 – 4 disconnect links can be snapped on
a) for mechanical interlocking for multipole switching
b) for protecting markers.

Interlocking link

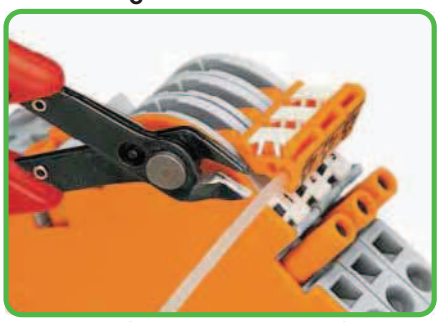

Interlocking link for mechanical interlocking of several links for multipole switching.

Touch-proof test sockets

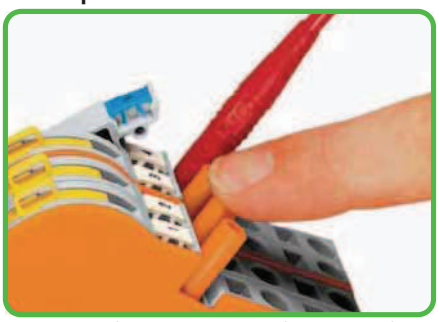

For touch-proof test sockets 4 mm Ø, for example mfd by Multi-Contact (not offered by WAGO).

Marking

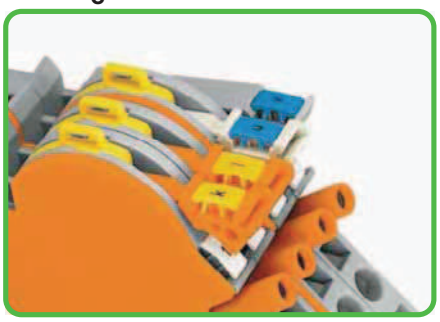

Marking with WMB Multi marking system.
For other systems, see Section 13.



CAGE CLAMP® clamps the following copper conductors:*

solid



stranded



fine-stranded, also with tinned single strands

* For aluminum conductors, see notes in Section 14.

– Description and Handling –

Disconnect link in notched position "I"

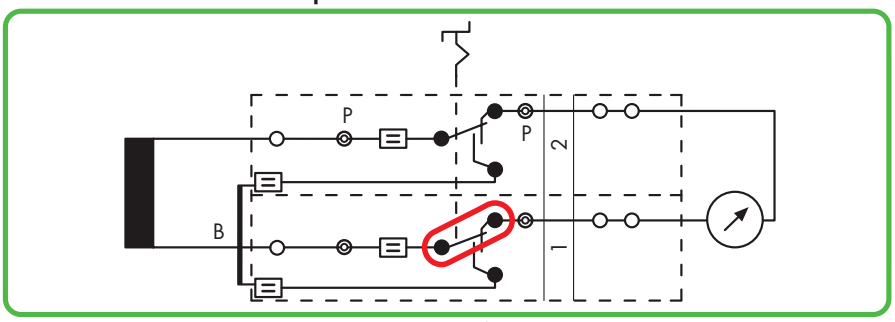

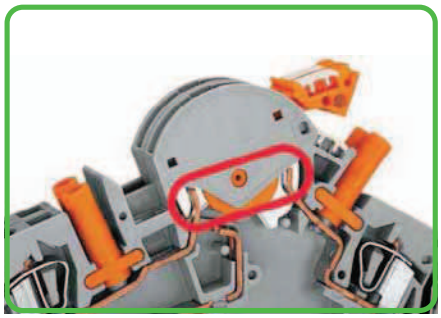

In position "I", the measuring instrument is connected to the transformer secondary.

B = shorting jumper, P = test socket

Disconnect link in transition from "I" –> "TEST" (terminal blocks 1 + 2)

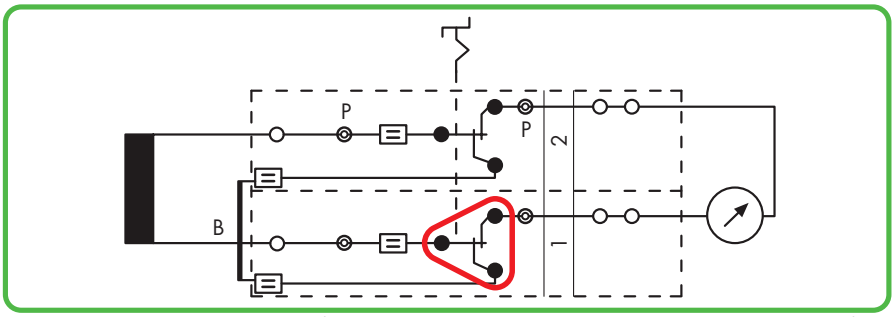

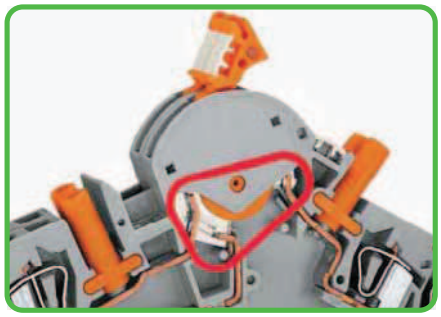

By moving the interlocked disconnect links from "I" to "TEST" the shorting path is activated without disconnection of the measuring instrument yet.

Disconnect link in notched position "TEST" (terminal blocks 1 + 2)

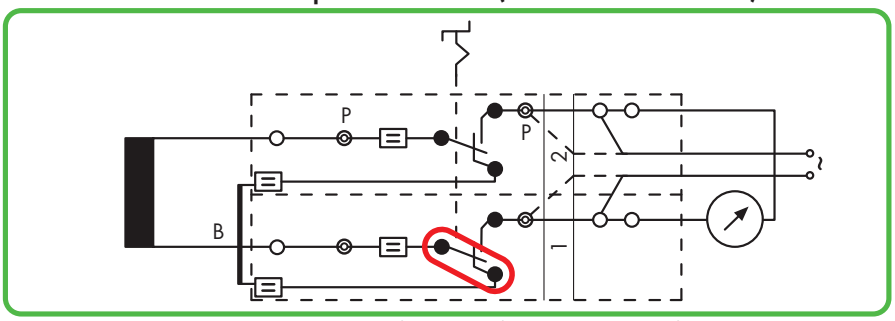

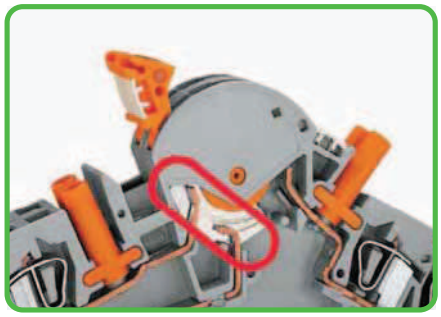

The measuring instrument is electrically disconnected from the transformer. In this position, if necessary, external voltage can be applied via sockets, or the 2nd CAGE CLAMP® connection for relay testing in transformer protection circuits.

Disconnect link in notched position "I" (terminal block 2)
Disconnect link in notched position "TEST" (terminal block 1)

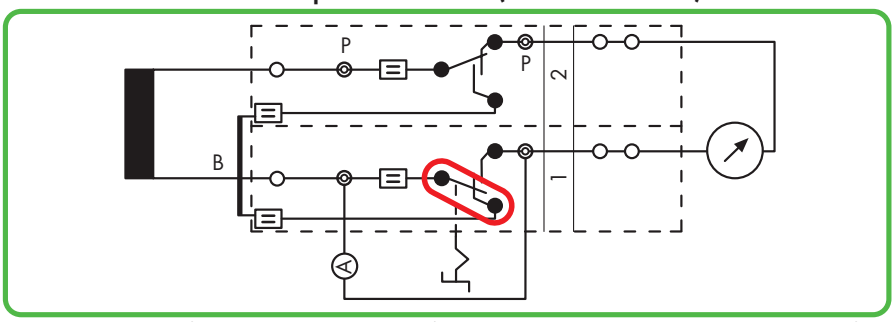

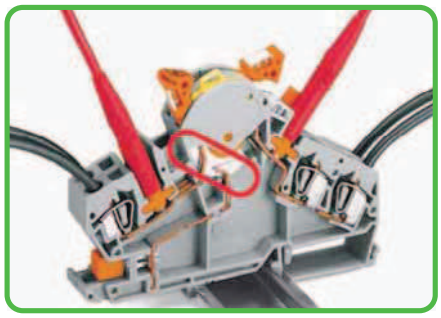

Measurement testing. Before moving the disconnect link of terminal block 1 into the notched position "TEST", the reference current meter must be inserted into the test socket of terminal block 1.



fine-stranded, tip-bonded



fine-stranded, with ferrule ❶ (gastight crimped)



fine-stranded, with pin terminal (gastight crimped)

❶ When using ferrules, the max. conductor cross section accommodated is one size smaller than max. rating of terminal block.

Circuit Configuration Examples

CAGE CLAMP® connection

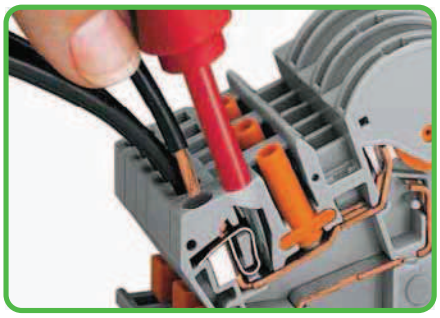

Conductor termination with operating tool (5.5 x 0.8) mm

Additional CAGE CLAMP®-connection

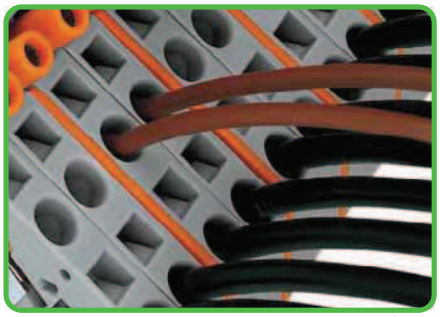

Additional CAGE CLAMP® connection on the side of the measuring instrument. For example: connecting wire commoning chains or applying an external voltage.

Commoning

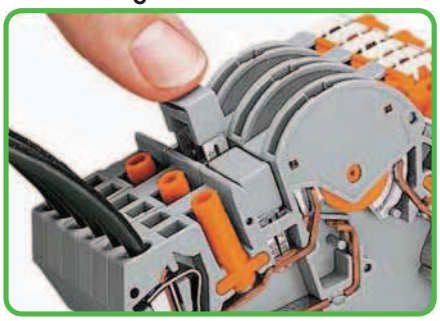

Additional commoning possible with adjacent jumper or testing option via 209-170 test plug adapter on transformer side.

Lock-out seal

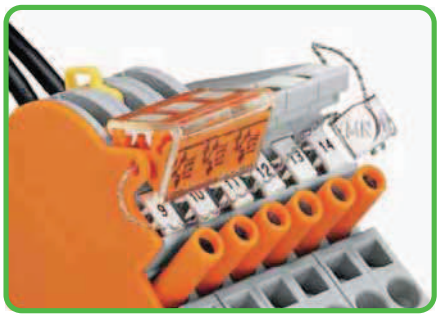

A lock-out seal can be used on the disconnect link in notched position "I".

Measuring set for a single-phase current transformer

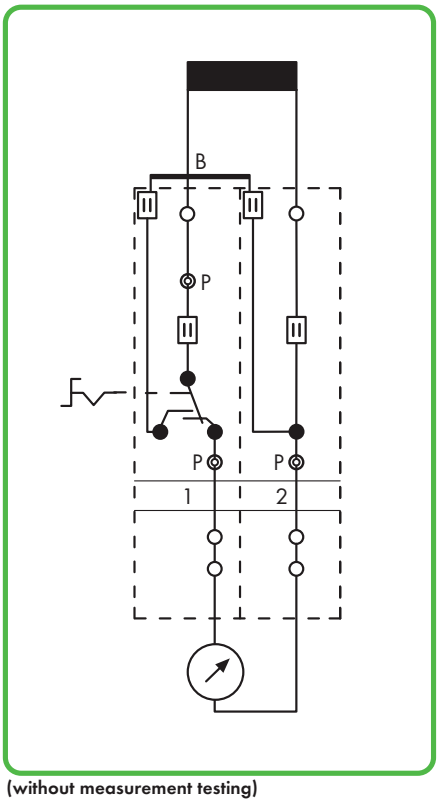

(without measurement testing)

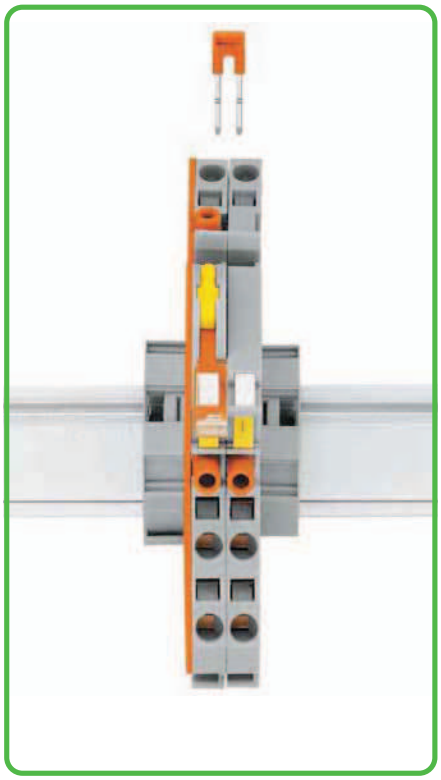

Terminal blocks required:

1 x disconnect/test terminal block	282-870
1 x through terminal block	282-865
1 x jumper, orange	282-424
1 x end plate, orange	282-386

in addition locking cover, lock-out

Measuring set for a single-phase voltage transformer

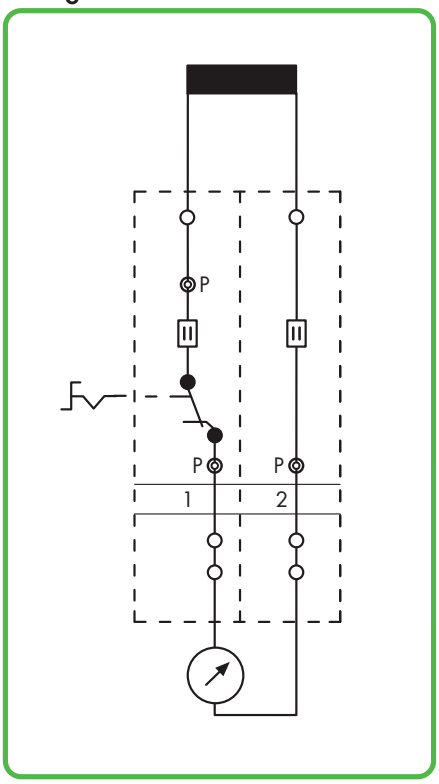

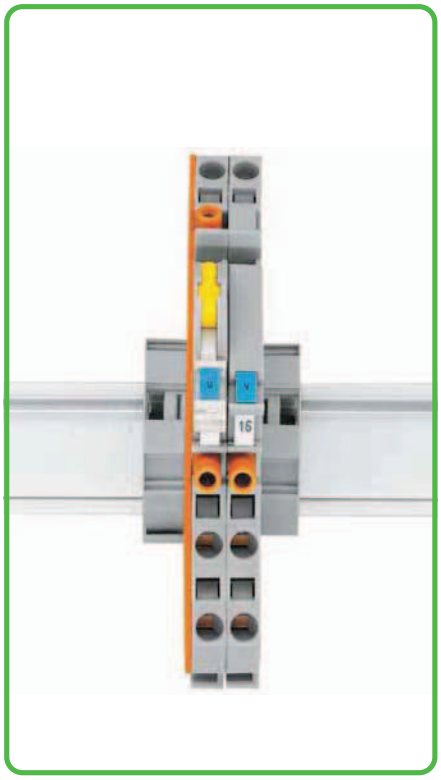

Terminal blocks required:

1 x disconnect/test terminal block	282-860
1 x through terminal block	282-866
1 x jumper, orange	282-424
1 x end plate, orange	282-386

in addition locking cover, lock-out