# – Handling –
# Disconnect Lock

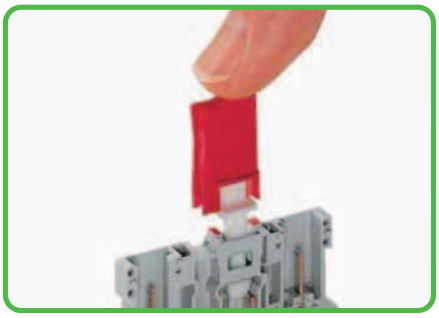

The lock is put on the disconnect tab of the disconnect terminal block (the picture shows a 769 Series 2-pin disconnect carrier terminal block)

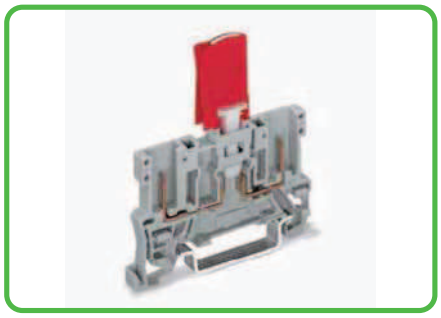

The disconnect lock is in position.

❶ 400 V = rated voltage
6 kV = rated surge voltage
3 = pollution degree
(also see Section 14)

❷ Strip length, see packaging or instructions.

❸ See application notes for:
Insulation stop, page 199
Comb-style jumper bar, page 200
Operating tool, page 200

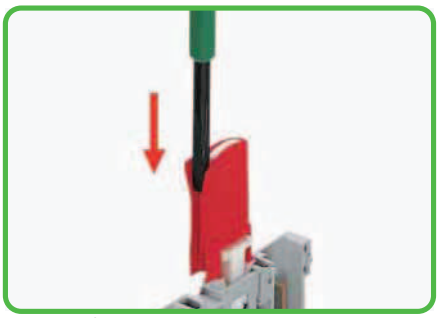

Unlocking of disconnect lock.



Removing of disconnect lock.

**Double safety**
The disconnect tab has been designed for maximum operational safety.

As soon as the disconnecting tab is in the disconnect position, it can be protected against unintentional reconnection by using the disconnect lock.
Only through dedicated effort and use of a tool, can the disconnect lock be removed, and the circuit reconnected.

**Features/Benefits:**
- Easy handling
- The disconnect lock can be easily installed
- Clear identification of disconnect tab position
- Increases safety
- Dedicated effort is required to reconnect the circuit

## 281 Series Accessories

Appropriate marking systems
(see Section 13)

| | | | |
|---|---|---|---|
| **Insulation stop,** ❸ | | | |
| | 5 pcs/strip, | | |
| | 0.08 - 0.2 mm² "s" (0.14 mm² "f-st") | | |
| | white | **281-470** | 200 (8x25) |
| **Insulation stop,** ❸ | | | |
| | 5 pcs/strip, | | |
| | 0.25 - 0.5 mm² | | |
| | light gray | **281-471** | 200 (8x25) |
| **Insulation stop,** ❸ | | | |
| | 5 pcs/strip, | | |
| | 0.25 - 1.5 mm² | | |
| | dark gray | **281-472** | 200 (8x25) |
| **Comb-style jumper bar,** insulated, ❸ | | | |
| | $I_N$ = $I_N$ terminal block | | |
| | 2-way | **281-482** | 100 (4x25) |
| | 3-way | **281-483** | 100 (4x25) |
| **Alternate comb-style jumper bar,** | | | |
| | insulated, | | |
| | $I_N$ = $I_N$ terminal block | | |
| | 2-way | **281-492** | 100 (4x25) |
| **Operating tool,** of insulating material | | | |
| | 2-way | **280-432** | 1 |
| | 3-way | **280-433** | 1 |
| **Protective warning marker,** | | | |
| | with high-voltage symbol, black, | | |
| | for 5 terminal blocks | | |
| | yellow | **281-415** | 100 (4x25) |
| **Disconnect lock,** | | | |
| | for disconnect tab used on 280/281 and | | |
| | 769 Series disconnect terminal blocks | | |
| | red | **709-170** | 200 (8x25) |
| **Test socket,** | | | |
| | insulated, | | |
| | 2 mm Ø | | |
| | red | **209-107** | 100 (2x50) |
| **Test socket,** | | | |
| | insulated, | | |
| | 2.3 mm Ø | | |
| | yellow | **209-108** | 100 (2x50) |
| **Test plug,** | | | |
| | with 500 mm cable, | | |
| | 2 mm Ø | | |
| | red | **210-136** | 50 |
| **Test plug,** | | | |
| | with 500 mm cable, | | |
| | 2.3 mm Ø | | |
| | yellow | **210-137** | 50 |

# Disconnect Terminal Blocks for Test and Measurement of Transformer Circuits, 282 Series

## Preparing the shorting path for the current transformer



Insertion of insulated, touchproof adjacent jumpers into the protected shorting position.

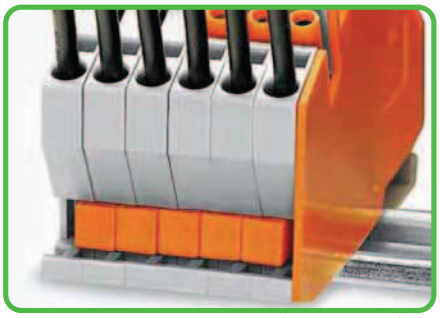

Terminal strip permanently prepared for current transformer circuits.

## Lock-out

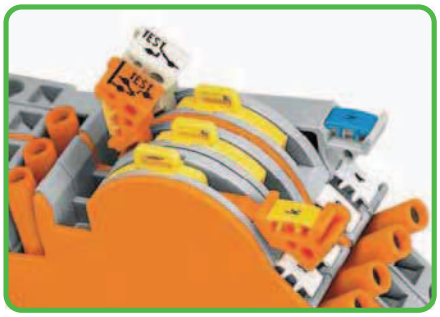

Lock-out has "snap" action into two notched positions preventing accidental operation of the disconnect link.

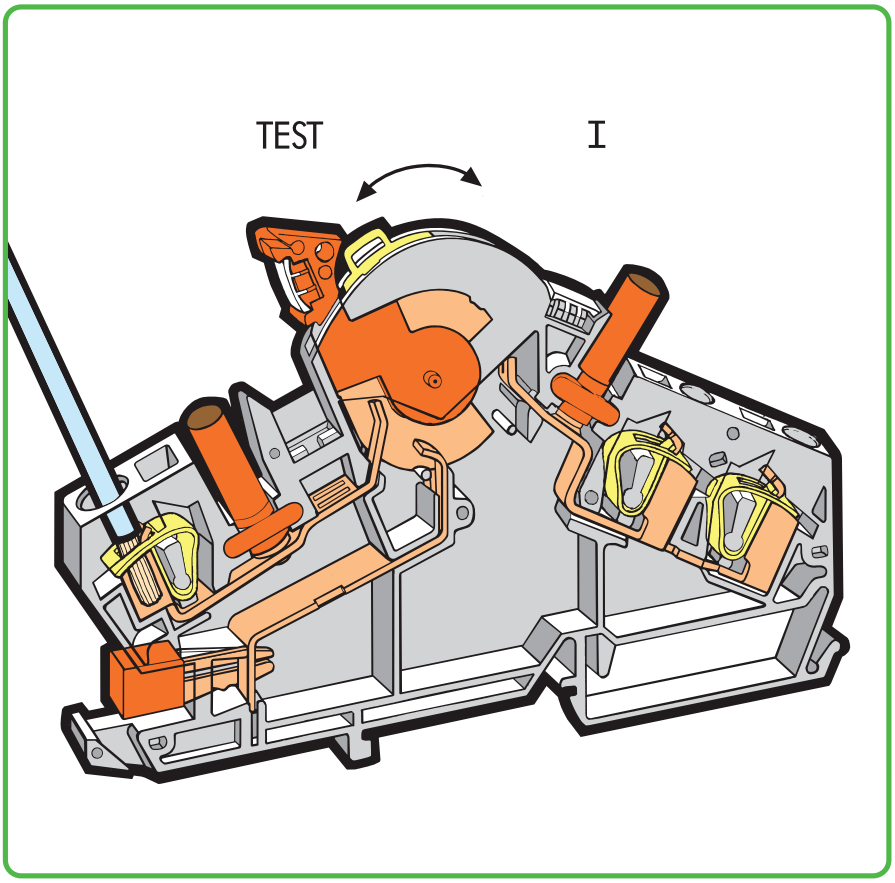


## Locking cover for disconnect links



Transparent locking cover for 1 – 4 disconnect links can be snapped on
a) for mechanical interlocking for multipole switching
b) for protecting markers.

## Interlocking link

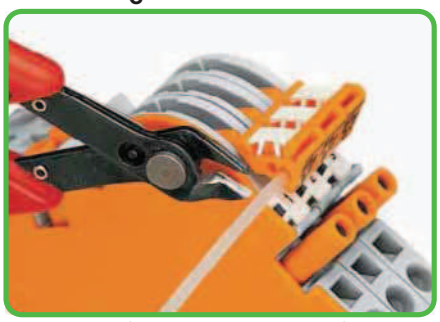

Interlocking link for mechanical interlocking of several links for multipole switching.

## Touch-proof test sockets

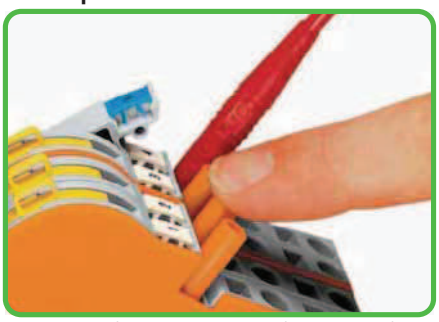

For touch-proof test sockets 4 mm Ø, for example mfd by Multi-Contact (not offered by WAGO).

## Marking

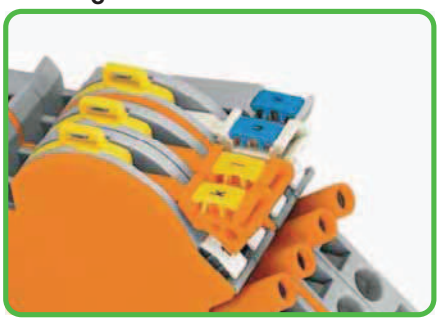

Marking with WMB Multi marking system.
For other systems, see Section 13.



**CAGE CLAMP® clamps the following copper conductors:***

solid



stranded



fine-stranded, also with tinned single strands

* For aluminum conductors, see notes in Section 14.

# – Description and Handling –

## Disconnect link in notched position "I"

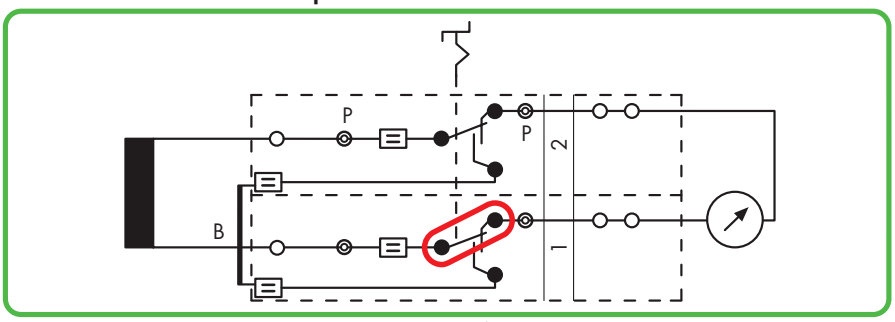


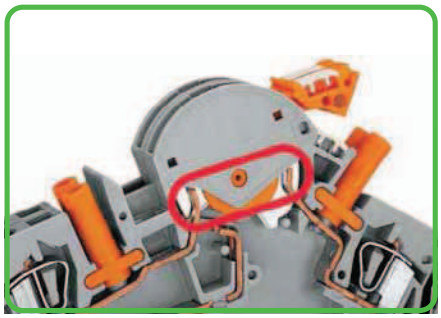

In position "I", the measuring instrument is connected to the transformer secondary.

B = shorting jumper, P = test socket

## Disconnect link in transition from "I" –> "TEST" (terminal blocks 1 + 2)

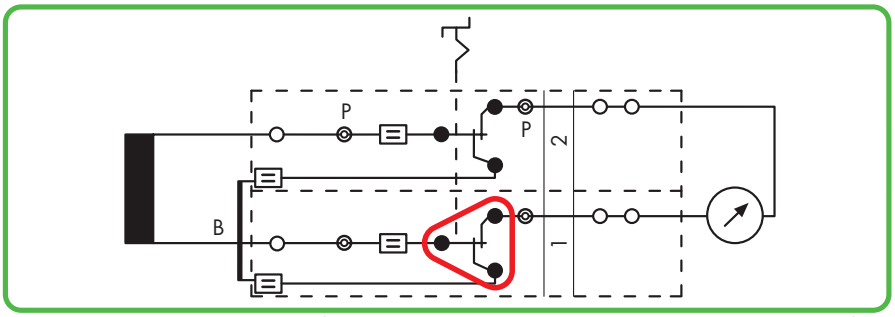


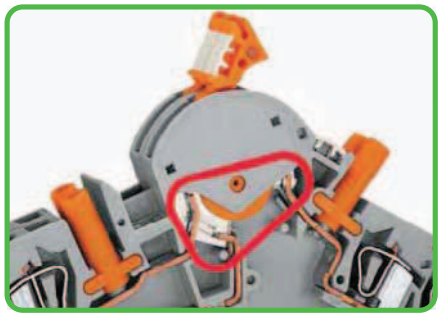

By moving the interlocked disconnect links from "I" to "TEST" the shorting path is activated without disconnection of the measuring instrument yet.

## Disconnect link in notched position "TEST" (terminal blocks 1 + 2)

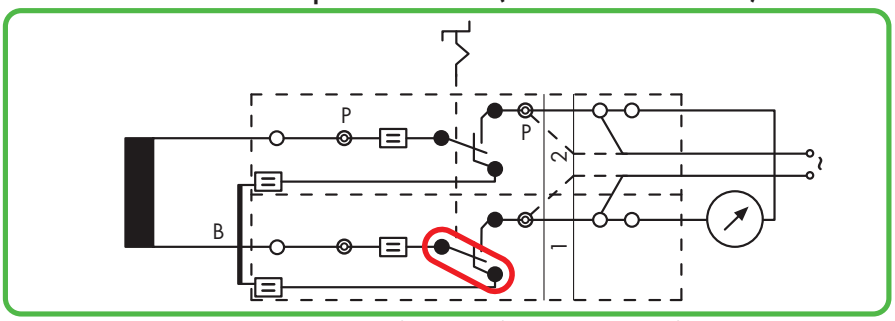


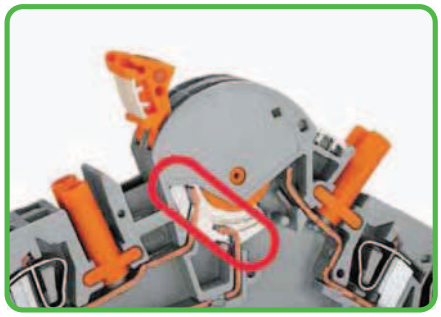

The measuring instrument is electrically disconnected from the transformer. In this position, if necessary, external voltage can be applied via sockets, or the 2nd CAGE CLAMP® connection for relay testing in transformer protection circuits.

## Disconnect link in notched position "I" (terminal block 2)
## Disconnect link in notched position "TEST" (terminal block 1)

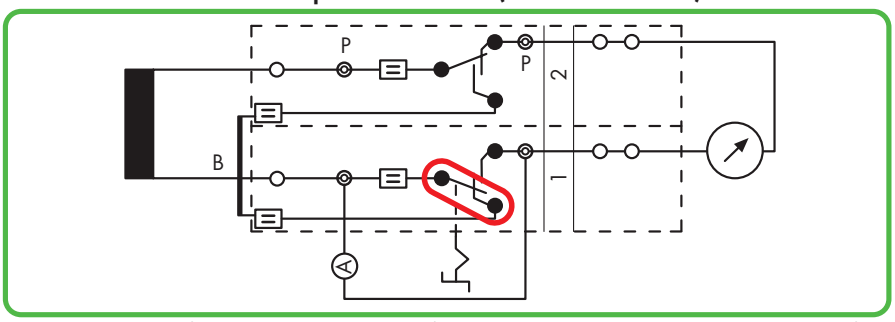


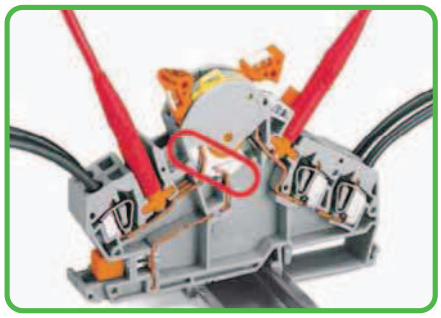

Measurement testing. Before moving the disconnect link of terminal block 1 into the notched position "TEST", the reference current meter must be inserted into the test socket of terminal block 1.



fine-stranded, tip-bonded



fine-stranded, with ferrule ❶ (gastight crimped)



fine-stranded, with pin terminal (gastight crimped)

❶ When using ferrules, the max. conductor cross section accommodated is one size smaller than max. rating of terminal block.

# Circuit Configuration Examples

## CAGE CLAMP® connection

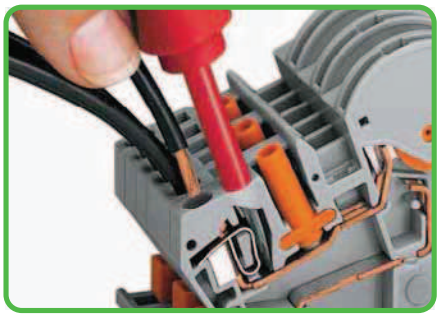

Conductor termination with operating tool (5.5 x 0.8) mm

## Additional CAGE CLAMP®-connection

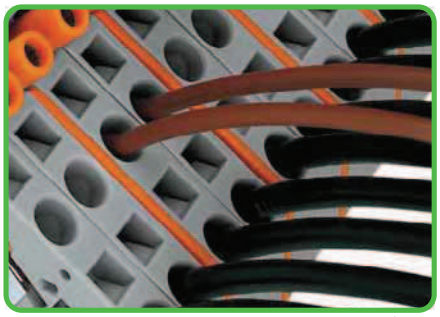

Additional CAGE CLAMP® connection on the side of the measuring instrument. For example: connecting wire commoning chains or applying an external voltage.

## Commoning

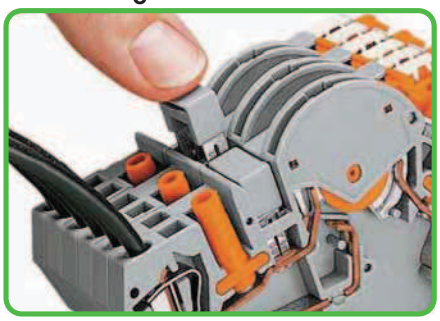

Additional commoning possible with adjacent jumper or testing option via 209-170 test plug adapter on transformer side.

## Lock-out seal

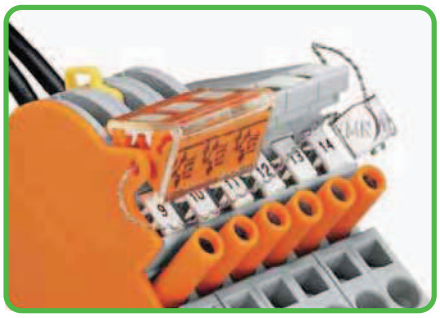

A lock-out seal can be used on the disconnect link in notched position "I".

## Measuring set for a single-phase current transformer

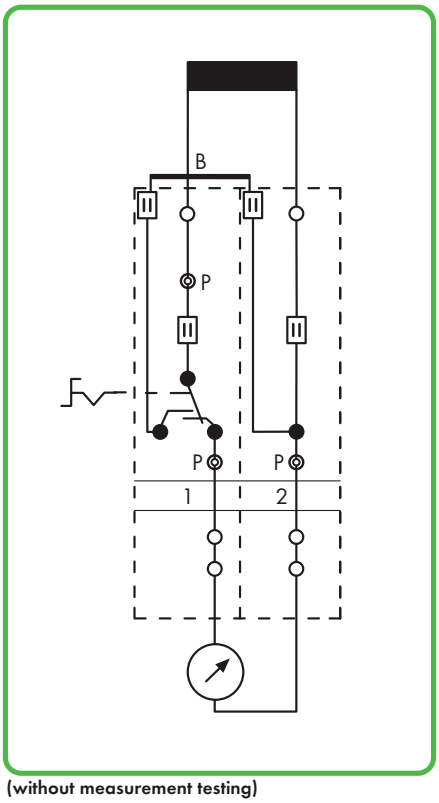


**(without measurement testing)**

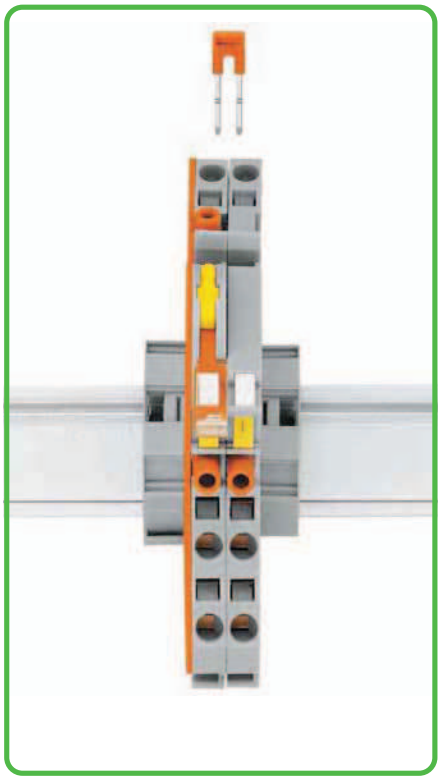

Terminal blocks required:

| | |
|---|---|
| 1 x disconnect/test terminal block | 282-870 |
| 1 x through terminal block | 282-865 |
| 1 x jumper, orange | 282-424 |
| 1 x end plate, orange | 282-386 |

in addition locking cover, lock-out

## Measuring set for a single-phase voltage transformer

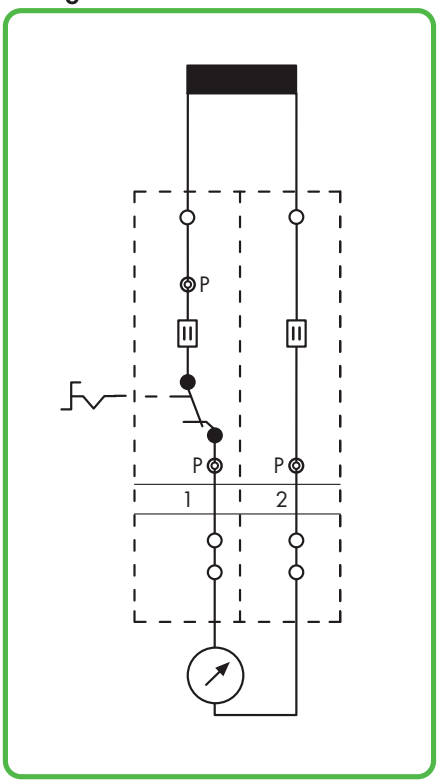


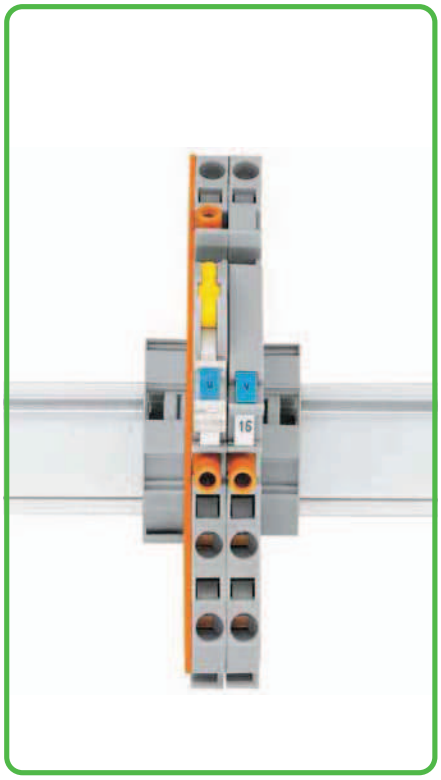

Terminal blocks required:

| | |
|---|---|
| 1 x disconnect/test terminal block | 282-860 |
| 1 x through terminal block | 282-866 |
| 1 x jumper, orange | 282-424 |
| 1 x end plate, orange | 282-386 |

in addition locking cover, lock-out

## Measuring set for a 3-phase current transformer

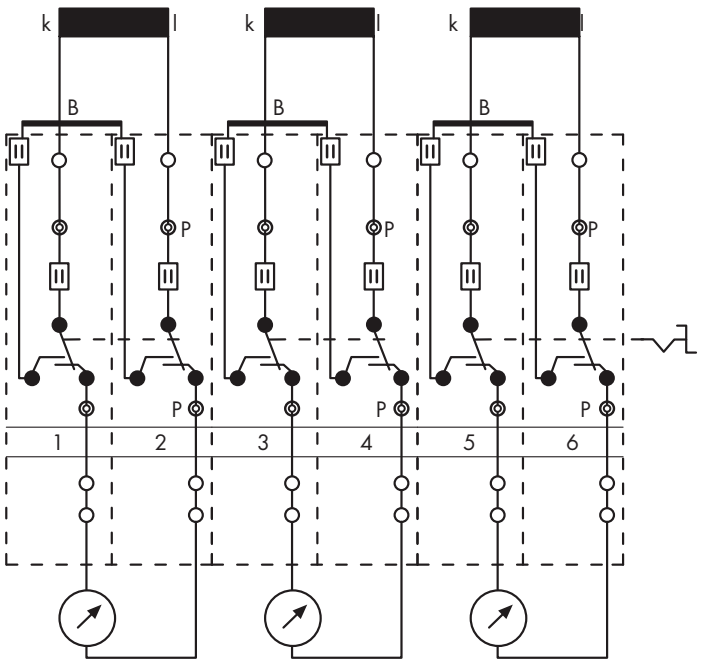


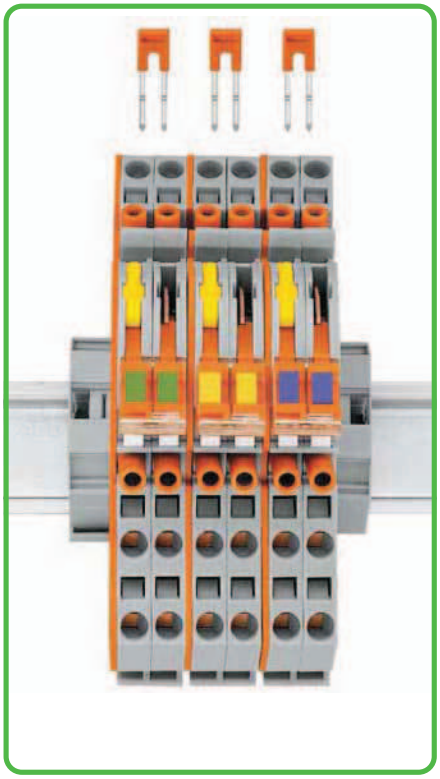

Pairs of disconnect links are interlocked by locking covers.
After the interlocking has been released, testing of the measured value is also possible.

B = shorting jumper, P = test socket

Terminal blocks required:

| | |
|---|---|
| 6 x disconnect/test terminal block | 282-870 |
| 3 x jumper, orange | 282-424 |
| 3 x end plate, orange | 282-386 |

in addition locking links, locking covers, lock-outs

## Measuring set for a 3-phase current transformer with 'Y' point

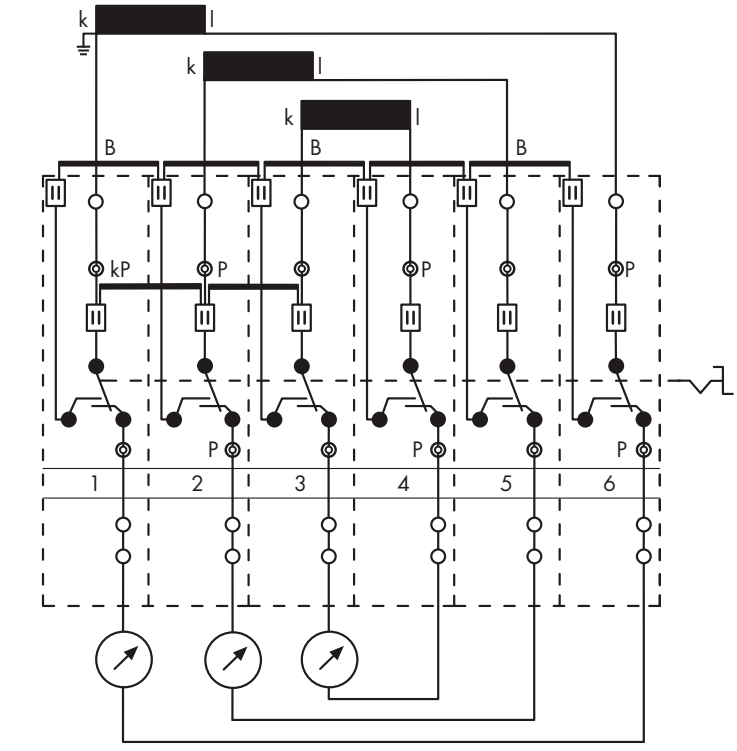


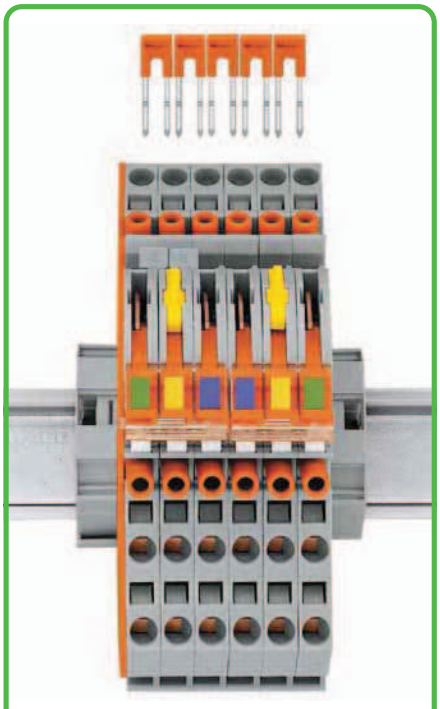

All 6 disconnect links are interlocked by the interlocking link.

kP = 'Y' point jumpers

Terminal blocks required:

| | |
|---|---|
| 6 x disconnect/test terminal block | 282-870 |
| 5 x jumper, orange | 282-424 |
| 2 x jumper, gray | 282-402 |
| 1 x end plate, orange | 282-386 |

in addition locking links, locking covers, lock-outs

# Disconnect Terminal Blocks for Test and Measurement, 6 mm²/30 A, Through Terminal Blocks for Current and Voltage Transformer Circuits 282 Series

| | | |
|---|---|---|
| 0.2 - 6 mm² | AWG 24 - 10 | |
| 500 V/6 kV/3 ❶ | 600 V, 30 A | |
| $I_N$ 30 A | 300 V, 5 A | |
| Terminal block width 8 mm / 0.315 in | | |
| 12 - 13 mm / 0.49 in ❷ | | |

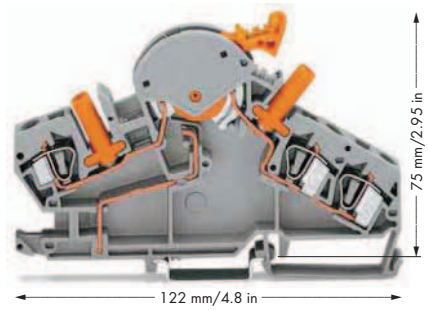


| | | |
|---|---|---|
| 0.2 - 6 mm² | AWG 24 - 10 | |
| 500 V/6 kV/3 ❶ | 600 V, 30 A | |
| $I_N$ 30 A | 300 V, 5 A | |
| Terminal block width 8 mm / 0.315 in | | |
| 12 - 13 mm / 0.49 in ❷ | | |

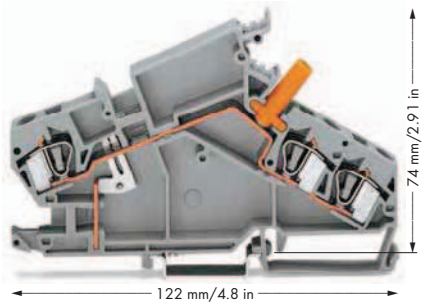


| | | |
|---|---|---|
| 0.2 - 6 mm² | AWG 24 - 10 | |
| 500 V/6 kV/3 ❶ | 600 V, 30 A | |
| $I_N$ 30 A | 300 V, 5 A | |
| Terminal block width 8 mm / 0.315 in | | |
| 12 - 13 mm / 0.49 in ❷ | | |

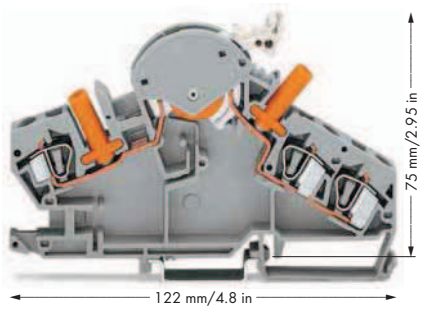


| | Item No. | Pack. Unit |
|---|---|---|
| **Disconnect terminal block for test and measurement,** e.g., current transformer circuits, with touch-proof test sockets, orange disconnect link | | |
| gray | **282-870** ❸ ❹ | 20 |

## Item-Specific Accessories

| | | | |
|---|---|---|---|
| **End and separator plate,** 1.5 mm thick, without use of lock-out seal | | | |
| | orange | **282-386** | 50 (5x10) |
| | gray | **282-391** | 50 (5x10) |
| **End and separator plate,** 1.5 mm thick, for use of lock-out seal | | | |
| | orange | **282-387** | 50 (5x10) |
| | gray | **282-392** | 50 (5x10) |
| **Lock-out,** for disconnect link | | | |
| | yellow | **282-384** | 100 (5x20) |
| **Locking cover,** transparent, mechanically locks multiple links | | | |
| | 1-pole | **282-881** | 50 (5x10) |
| | 2-pole | **282-882** | 50 (5x10) |
| | 3-pole | **282-883** | 50 (5x10) |
| | 4-pole | **282-884** | 50 (5x10) |
| | 5-pole | **282-885** | 50 (5x10) |
| | 6-pole | **282-886** | 50 (5x10) |
| | 7-pole | **282-887** | 50 (5x10) |
| | 8-pole | **282-888** | 50 (5x10) |
| **Interlocking link,** mechanically locks multiple links, 1 m/3'3" long | | | |
| | transparent | **210-254** | 1 |
| **Adjacent jumper,** insulated, $I_N$ 41 A | | | |
| | orange | **282-424** | 100 (4x25) |
| **WMB Multi marking system,** 10 strips with 10 markers per card, for terminal widths 5 - 17.5 mm, yellow | | | |
| | k/l (50x) | **794-5553/000-002** | 5 |

| | Item No. | Pack. Unit |
|---|---|---|
| **Through terminal block,** e.g., current transformer circuits, with touch-proof test socket | | |
| gray | **282-865** ❹ | 20 |

## Item-Specific Accessories

| | | | |
|---|---|---|---|
| **End and separator plate,** 1.5 mm thick | | | |
| | orange | **282-385** | 50 (5x10) |
| | gray | **282-390** | 50 (5x10) |
| **WMB Multi marking system,** 10 strips with 10 markers per card, for terminal widths 5 - 17.5 mm, yellow | | | |
| | k/l (50x) | **794-5553/000-002** | 5 |

| | Item No. | Pack. Unit |
|---|---|---|
| **Disconnect terminal block for test and measurement,** e.g., voltage transformer circuits, with touch-proof test sockets, light gray disconnect link | | |
| gray | **282-860** ❸ ❹ | 20 |

## Item-Specific Accessories

| | | | |
|---|---|---|---|
| **End and separator plate,** 1.5 mm thick, without use of lock-out seal | | | |
| | orange | **282-386** | 50 (5x10) |
| | gray | **282-391** | 50 (5x10) |
| **End and separator plate,** 1.5 mm thick, for use of lock-out seal | | | |
| | orange | **282-387** | 50 (5x10) |
| | gray | **282-392** | 50 (5x10) |
| **Lock-out,** for disconnect link | | | |
| | yellow | **282-384** | 100 (5x20) |
| **Locking cover,** transparent, mechanically locks multiple links | | | |
| | 1-pole | **282-881** | 50 (5x10) |
| | 2-pole | **282-882** | 50 (5x10) |
| | 3-pole | **282-883** | 50 (5x10) |
| | 4-pole | **282-884** | 50 (5x10) |
| | 5-pole | **282-885** | 50 (5x10) |
| | 6-pole | **282-886** | 50 (5x10) |
| | 7-pole | **282-887** | 50 (5x10) |
| | 8-pole | **282-888** | 50 (5x10) |
| **Interlocking link,** mechanically locks multiple links, 1 m/3'3" long | | | |
| | transparent | **210-254** | 1 |
| **WMB Multi marking system,** 10 strips with 10 markers per card, for terminal widths 5 - 17.5 mm, blue | | | |
| | U/V (50x) | **794-5554/000-006** | 5 |

For list of approvals and user guide, see pages 634 to 637.

| 0.2 - 6 mm² | AWG 24 - 10 |
|---|---|
| 500 V/6 kV/3 ❶ | 600 V, 30 A |
| $I_N$ 30 A | 300 V, 5 A |

Terminal block width 8 mm / 0.315 in
12 - 13 mm / 0.49 in ❷

| 0.2 - 6 mm² | AWG 24 - 10 |
|---|---|

Terminal block width 8 mm / 0.315 in
12 - 13 mm / 0.49 in ❷

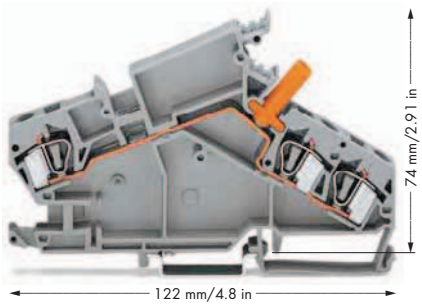


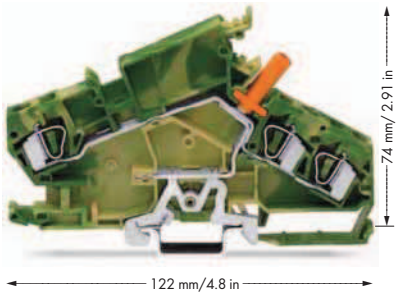


❶ 500 V = rated voltage
6 kV = rated surge voltage
3 = pollution degree
(also see Section 14)

❷ Strip length, see packaging or instructions.

❸ Max. height when rotating the disconnect link (incl. locking cover): 92 mm/3.62 in

❹ For operating stickers, please refer to our online catalog:
for 282-870: Item No. 210-412
for 282-865: Item No. 210-415
for 282-860: Item No. 210-414
for 282-866: Item No. 210-413

| | Item No. | Pack. Unit |
|---|---|---|
| **Through terminal block,** | | |
| e.g., voltage transformer circuits, | | |
| with touch-proof test socket | | |
| gray | **282-866** ❹ | 20 |

| | Item No. | Pack. Unit |
|---|---|---|
| **Ground terminal block,** | | |
| e.g., voltage transformer circuits, | | |
| with touch-proof test socket | | |
| green-yellow | **282-868** ❹ | 20 |

## Item-Specific Accessories

**End and separator plate,**



1.5 mm thick

| | | |
|---|---|---|
| orange | **282-385** | 50 (5x10) |
| gray | **282-390** | 50 (5x10) |

**WMB Multi marking system,**



10 strips with 10 markers per card,
for terminal widths 5 - 17.5 mm,
blue
U/V (50x) **794-5554/000-006**
5

## Item-Specific Accessories

**End and separator plate,**



1.5 mm thick

| | | |
|---|---|---|
| orange | **282-385** | 50 (5x10) |
| gray | **282-390** | 50 (5x10) |

## 282 Series Accessories

Appropriate marking systems
(see Section 13)

**Adjacent jumper,** insulated,



$I_N$ 41 A
gray **282-402** 100 (4x25)

**Alternate jumper,** insulated,



$I_N$ 41 A
gray **282-409** 100 (4x25)

**Protective warning marker,**



with high-voltage symbol, black,
for 5 terminal blocks
yellow **282-415** 100 (4x25)

**Wire commoning chain,** 4 connections,



3 x 110 mm,
insulated, $I_N$ 24 A
black **709-110** 1

**Wire commoning chain,** 3 connections,



2 x 120 mm,
insulated, $I_N$ 24 A
black **709-111** 1

**Wire commoning chain,** 3 connections,



2 x 170 mm,
insulated, $I_N$ 24 A
black **709-112** 1

**Group marker carrier,**



e.g., for 282 Series transformer terminal blocks, angled
gray **209-144** 50 (2x25)

**WMB Multi marking system,**



10 strips with 10 markers per card,
for terminal widths 5 - 17.5 mm
plain **793-501** 5

**WMB Multi marking system,** plain,



10 strips with 10 markers per card,
for terminal widths 5 - 17.5 mm

| | |
|---|---|
| yellow | **793-501/000-002** |
| red | **793-501/000-005** |
| blue | **793-501/000-006** |
| gray | **793-501/000-007** |
| orange | **793-501/000-012** |
| light green | **793-501/000-017** |
| green | **793-501/000-023** |
| violet | **793-501/000-024** |

5

# Transverse Switching Terminal Blocks and Longitudinal Switching Disconnect Terminal Blocks, 282 Series – Description and Handling –

## Commoning

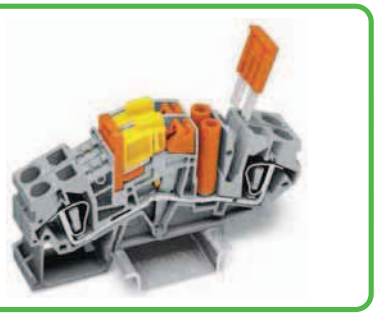

Transverse switching terminal blocks
Left: Adjacent jumper for commoning of switch lever
Right: Commoning with orange jumper

## Switch positions

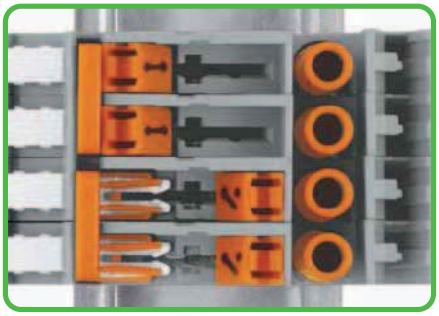

Left: closed
Right: open

## Current transformer circuit

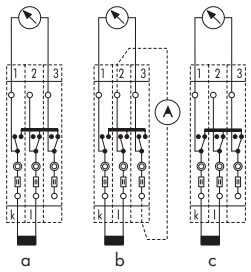


**via transverse switching terminal blocks**
**a** = Normal operation **b** = Measurement testing
**c** = Transformer short-circuit

## Testing

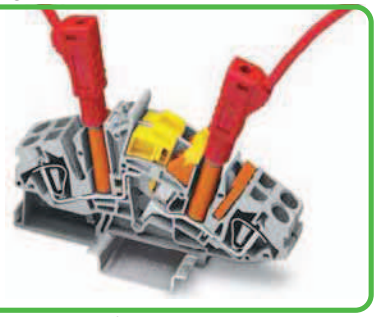

Testing with touch-proof test sockets 4 mm Ø.
(not offered by WAGO)
e.g., mfd by Multi-Contact Deutschland GmbH

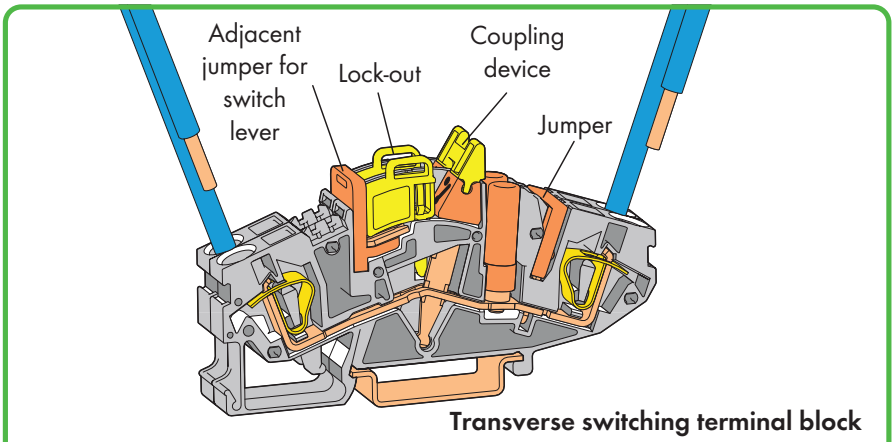


## CAGE CLAMP® connection

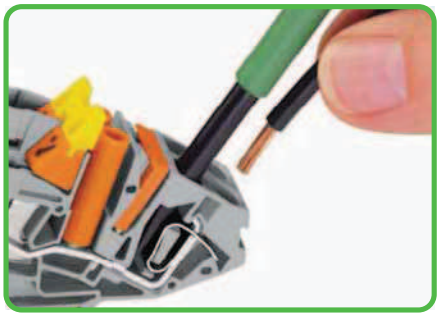

Conductor termination

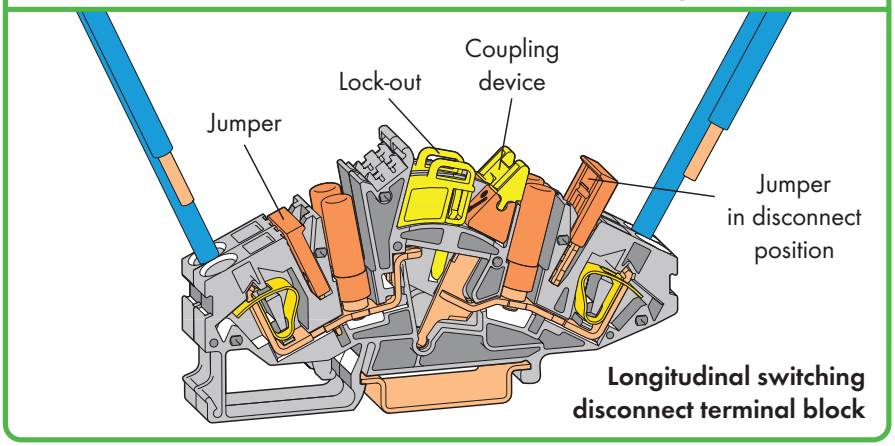


## Lock-out

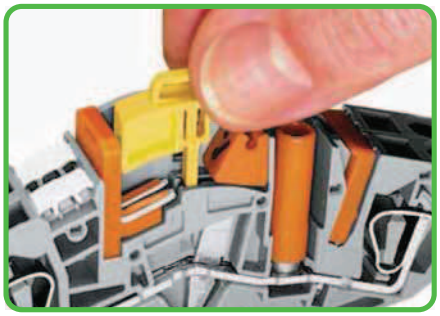

Inserting lock-out.

## Commoning

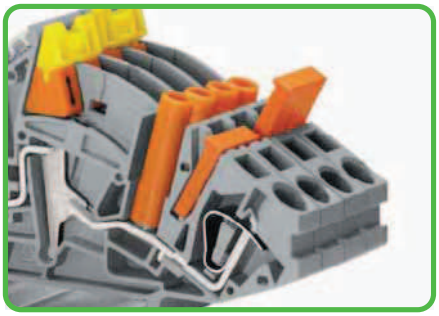

Longitudinal switching disconnect terminal blocks

## Current transformer circuit

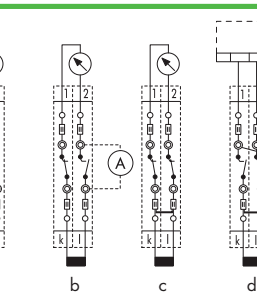


**via longitudinal switching disconnect terminal blocks**
**a** = Normal operation **b** = Measurement testing
**c** = Transformer short-circuit **d** = Relay test

**CAGE CLAMP® clamps the following copper conductors:***

| solid | stranded | fine-stranded, also with tinned single strands | fine-stranded, tip-bonded | fine-stranded, with ferrule ❶ (gastight crimped) | fine-stranded, with pin terminal (gastight crimped) |
|---|---|---|---|---|---|

* For aluminum conductors, see notes in Section 14.

❶ When using ferrules, the max. conductor cross section accommodated is one size smaller than max. rating of terminal block.

# Jumpers with Safety Lid for Longitudinal Switching Disconnect Terminal Blocks Series 282



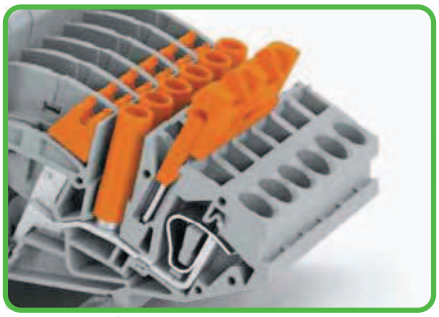

Jumper with safety lid
– Jumper in pre-latching position

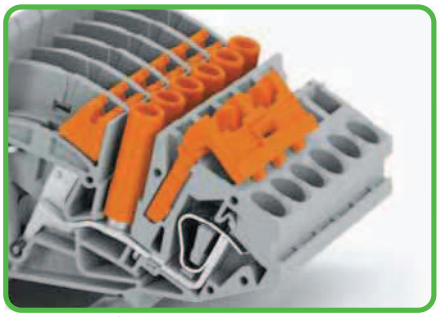

Jumper with safety lid
Longitudinal switching disconnect terminal blocks with inserted jumper, including safety lid

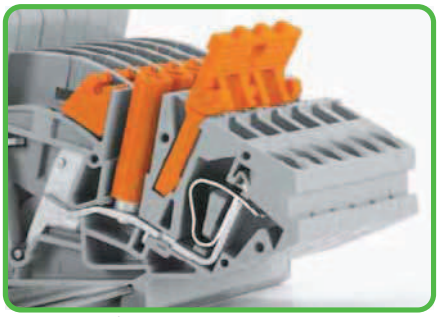

Jumper with safety lid
– Jumper with raised safety lid

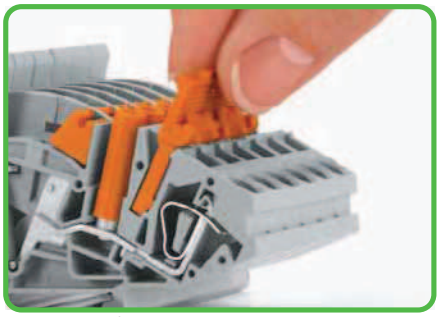

Jumper with safety lid
– Removing jumper via safety lid

# Transverse Switching Terminal Blocks and Longitudinal Switching Disconnect Terminal Blocks 6 mm², e.g., Current Transformer Circuits, 282 Series

| | | |
|---|---|---|
| 0.2 - 6 mm² \| AWG 24 - 10<br>500 V/6 kV/3 ❶ \| 600 V, 30 A<br>$I_N$ 30 A \| 300 V, 36 A<br>Terminal block width 8 mm / 0.315 in<br>12 - 13 mm / 0.49 in ❷ | 0.2 - 6 mm² \| AWG 24 - 10<br>500 V/6 kV/3 ❶ \| 600 V, 30 A<br>$I_N$ 30 A \| 300 V, 36 A<br>Terminal block width 8 mm / 0.315 in<br>12 - 13 mm / 0.49 in ❷ | 0.2 - 6 mm² \| AWG 24 - 10<br>500 V/6 kV/3 ❶<br>$I_N$ 30 A<br>Terminal block width 8 mm / 0.315 in<br>12 - 13 mm / 0.49 in ❷ |

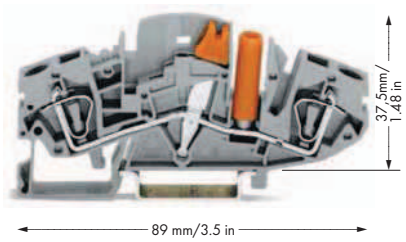


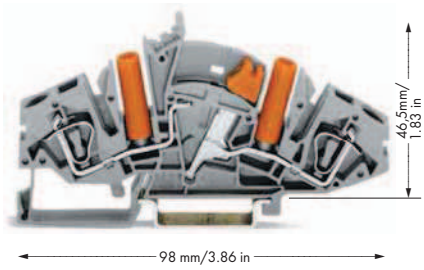


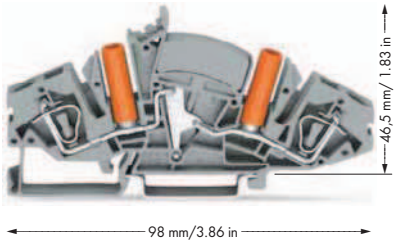


| Item No. | Pack. Unit |
|---|---|
| **2-conductor transverse switching terminal block,** with touch-proof test socket, for test plug 4 mm Ø | |
| ◯ gray **282-811** ❸ | 20 |

| Item No. | Pack. Unit |
|---|---|
| **2-conductor longitudinal switching disconnect terminal block,** with touch-proof test sockets, for test plug 4 mm Ø | |
| ◯ gray **282-821** ❸ | 20 |

| Item No. | Pack. Unit |
|---|---|
| **2-conductor through terminal block,** with touch-proof test sockets, for test plug 4 mm Ø | |
| ◯ gray **282-841** | 20 |

## Item-Specific Accessories

**End and separator plate,**

| | | |
|---|---|---|
| 1.5 mm thick | | |
| orange | **282-366** | 50 (5x10) |
| gray | **282-361** | 50 (5x10) |

**Adjacent jumper for switch lever,** insulated, orange,

| | | |
|---|---|---|
| $I_N$ 30 A | | |
| 2-way | **282-442** | 50 (5x10) |
| 3-way | **282-443** | 50 (5x10) |
| 4-way | **282-444** | 50 (5x10) |
| 5-way | **282-445** | 50 (5x10) |
| 6-way | **282-446** | 50 (5x10) |

## Item-Specific Accessories

**End and separator plate,**

| | | |
|---|---|---|
| 1.5 mm thick | | |
| orange | **282-365** | 50 (5x10) |
| gray | **282-360** | 50 (5x10) |

## Item-Specific Accessories

**End and separator plate,**

| | | |
|---|---|---|
| 1.5 mm thick | | |
| orange | **282-365** | 50 (5x10) |
| gray | **282-360** | 50 (5x10) |

## Accessories

Appropriate marking systems: WMB/Miniature WSB (see Section 13)

**Lock-out,**

| | | |
|---|---|---|
| for disconnect link | | |
| yellow | **282-370** | 100 (4x25) |

**Coupling device,**

| | | |
|---|---|---|
| mechanically locks multiple links, | | |
| yellow | | |
| 2-way | **282-372** | 50 (5x10) |
| 3-way | **282-373** | 50 (5x10) |
| 4-way | **282-374** | 50 (5x10) |

**Jumper,** insulated,

| | | |
|---|---|---|
| $I_N$ 30 A, | | |
| orange | | |
| 2-way | **282-432** | 50 (5x10) |
| 3-way | **282-433** | 50 (5x10) |
| 4-way | **282-434** | 50 (5x10) |
| 5-way | **282-435** | 50 (5x10) |
| 6-way | **282-436** | 50 (5x10) |
| 7-way | **282-437** | 50 (5x10) |
| 8-way | **282-438** | 50 (5x10) |
| 9-way | **282-439** | 50 (5x10) |
| 10-way | **282-440** | 50 (5x10) |

**Protective warning marker,**

| | | |
|---|---|---|
| with high-voltage symbol, black, | | |
| for 5 terminal blocks | | |
| yellow | **282-415** | 100 (4x25) |

**Jumper,** special design,

| | | |
|---|---|---|
| $I_N$ 30 A, | | |
| orange | | |
| 1-3-5 | **282-435/011-000** | |
| 1-3-5-7 | **282-437/011-000** | |
| | | 50 (5x10) |

**Jumper with safety lid,** insulated,

| | | |
|---|---|---|
| $I_N$ 30 A, | | |
| orange | | |
| 2-way | **282-432/100-000** | |
| 3-way | **282-433/100-000** | |
| 4-way | **282-434/100-000** | |
| | | 50 (5x10) |

**Collective carrier for jumpers,**

| | | |
|---|---|---|
| for jumpers for transverse switching terminal block (282-811) and longitudinal switching disconnect terminal block (282-821) | | |
| gray | **282-369** | 25 |

**WMB Multi marking system,**

| | | |
|---|---|---|
| 10 strips with 10 markers per card, | | |
| for terminal widths 5 - 17.5 mm | | |
| plain | **793-501** | 5 |

**WMB Multi marking system,** plain,

| | | |
|---|---|---|
| 10 strips with 10 markers per card, | | |
| for terminal widths 5 - 17.5 mm | | |
| yellow | **793-501/000-002** | |
| red | **793-501/000-005** | |
| blue | **793-501/000-006** | |
| gray | **793-501/000-007** | |
| orange | **793-501/000-012** | |
| light green | **793-501/000-017** | |
| green | **793-501/000-023** | |
| violet | **793-501/000-024** | |
| | | 5 |

For list of approvals and user guide, see pages 634 to 637.