Types of Assembly
2-Conductor/2-Pin Double-Deck Carrier Terminal Blocks and 1-Conductor Female Plugs

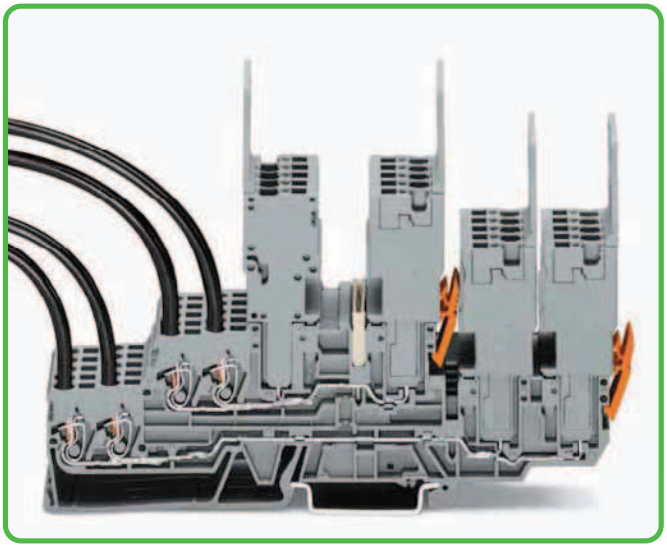

1-conductor female plug
Double-deck carrier terminal blocks can be commoned via 870 Series push-in type jumper bars.
Notice:
Female plugs must be opposing on the upper deck (see above).
Angled 1-conductor female plugs and 2-conductor female plugs cannot be used.

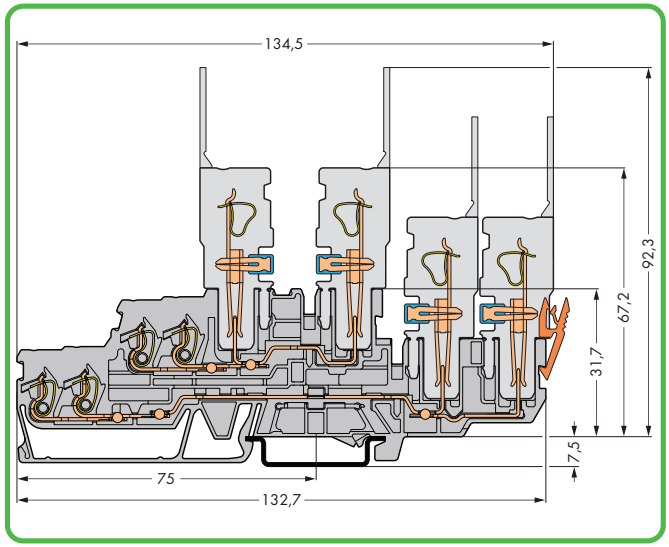

Carrier terminal block

X-COM®-SYSTEM
Male Headers and Male Connectors, 769 Series

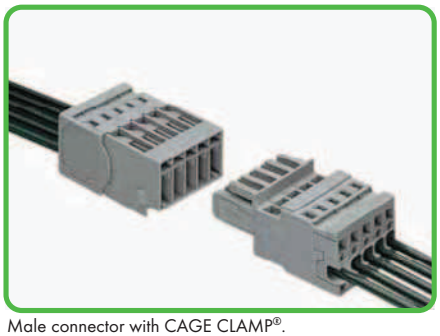

Male connector with CAGE CLAMP®.
1-conductor female plug, straight.

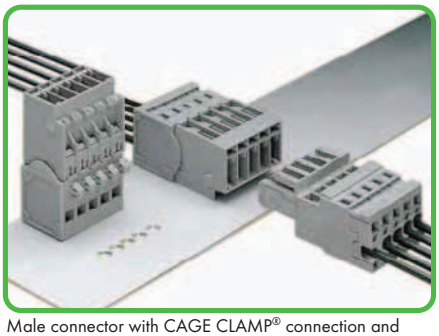

Male connector with CAGE CLAMP® connection and mounting feet.
1-conductor female plug, straight.

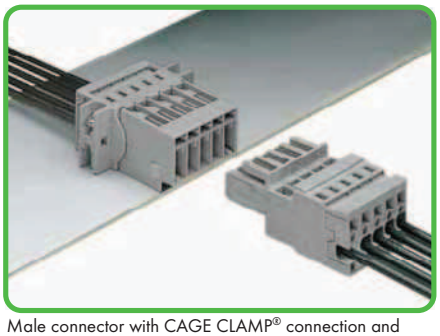

Male connector with CAGE CLAMP® connection and fixing flanges.
1-conductor female plug, straight.

Male connector with snap-in flanges

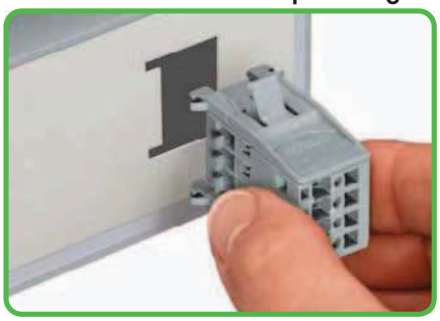





Snap-in mounting without tools.

Operating tool

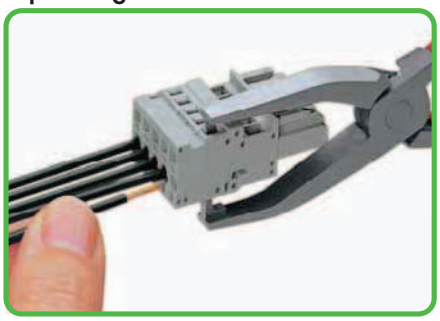

Conductor termination – side-entry wiring (example shows a female plug).

Strain relief plates

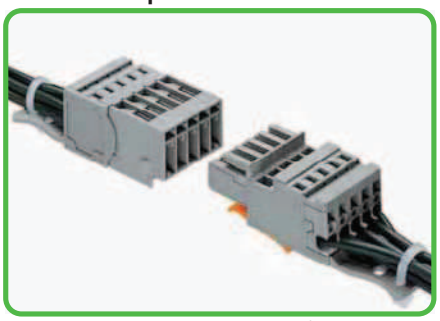

Can be snapped in male connector and female plug.

Operating tool

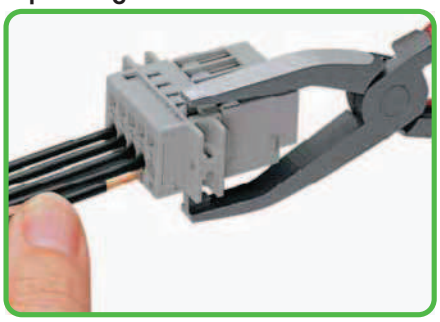

Conductor termination with operating tool (example shows a male connector).

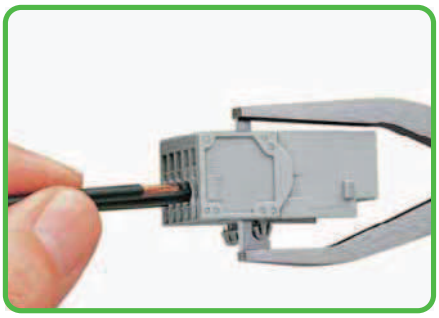

Can also be used with male connectors with snap-in mounting feet.

Marking



Female connector with CAGE CLAMP®.
with miniature WSB quick marking system



CAGE CLAMP® clamps the following copper conductors:*

solid



stranded



fine-stranded, also with tinned single strands

* For aluminum conductors, see notes in Section 14.

– Description and Handling –

Coding

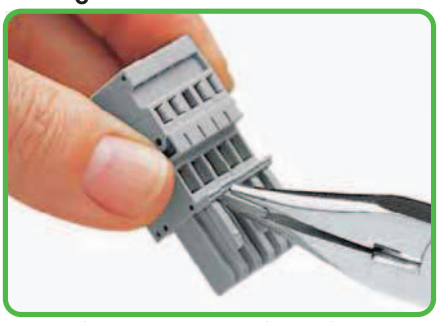

Coding a female plug – removal of coding finger(s). Do not break off the first and last latch position coding fingers!

Locking lever

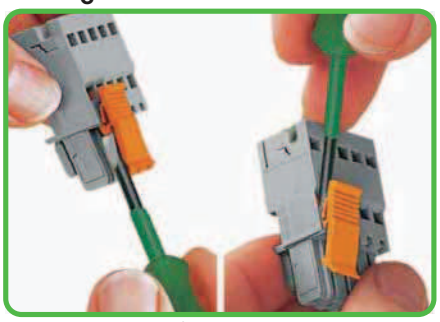

Snapping in/removal of locking lever.

Commoning

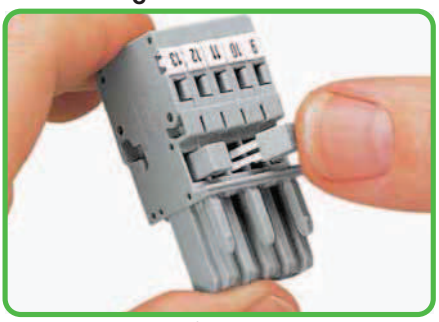

Commoning 1-conductor female plugs with miniature adjacent jumpers.

Note: Connectors used according to the regulations shall not be connected or disconnected when live or under load.

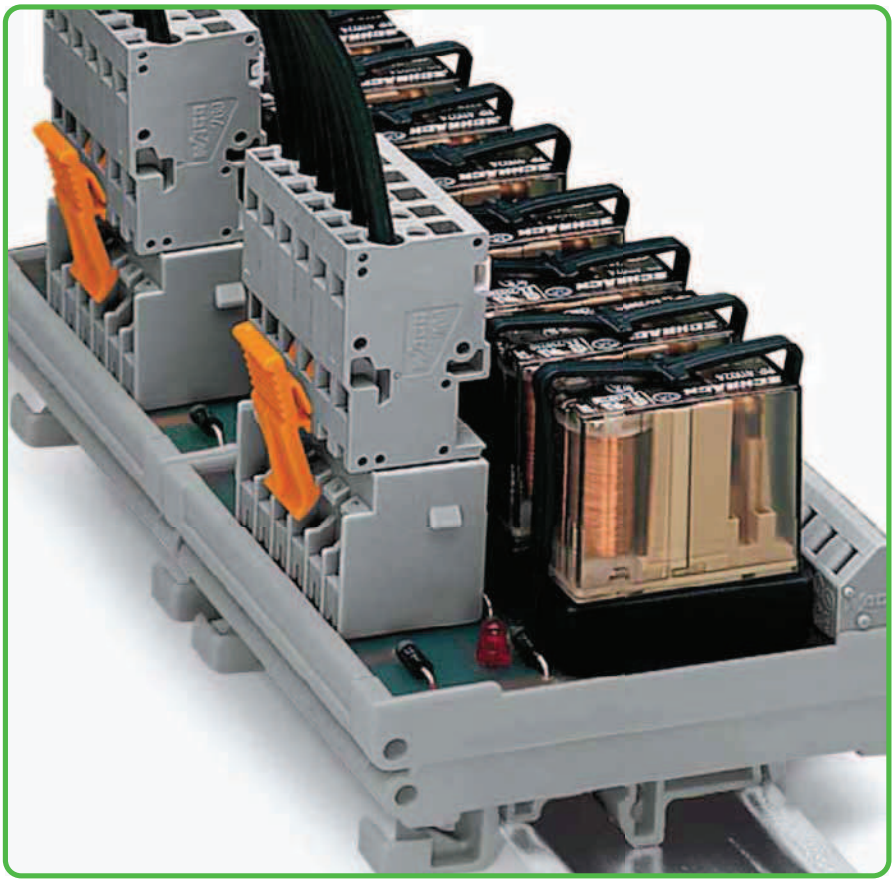

Plugging a female connector

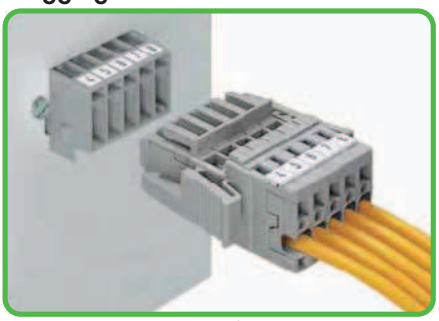

Male header and 1-conductor female plug with lateral locking levers.

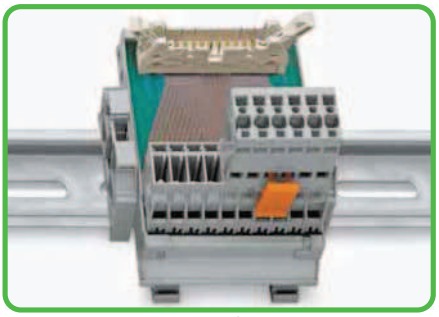

Male headers with solder pins for printed circuit boards.

Pluggable PCB connection

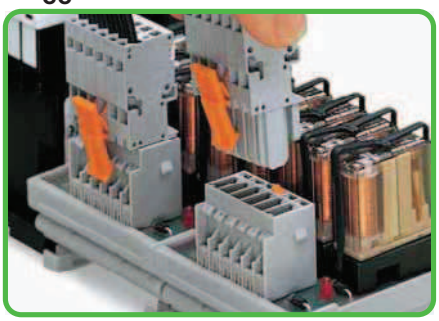

Connection to a relay module inside the switchgear cabinet.

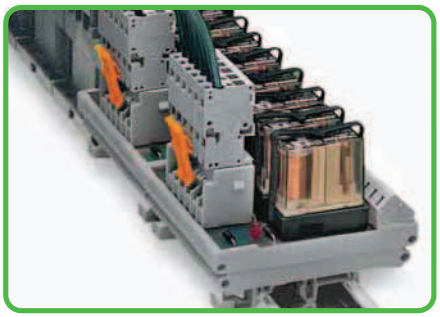

Application example showing a relay module:
Male headers with straight solder pins and 1-conductor female plugs.



Male headers with solder pins:
Integration of PCB sub-assemblies into the system wiring.



fine-stranded, tip-bonded



fine-stranded, with ferrule ❶ (gastight crimped)



fine-stranded, with pin terminal (gastight crimped)

❶ When using ferrules, the max. conductor cross section accommodated is one size smaller than max. rating of terminal block.

X-COM®-SYSTEM
Male Connectors
Pin Spacing 5 mm

Pin spacing 5 mm / 0.197 in, gray		Pin spacing 5 mm / 0.197 in, gray		Pin spacing 5 mm / 0.197 in, gray	
0.08 - 4 mm²	AWG 28 - 12	0.08 - 4 mm²	AWG 28 - 12	0.08 - 4 mm²	AWG 28 - 12
500 V/6 kV/3 ❶	300 V, 20 A	500 V/6 kV/3 ❶	600 V, 20 A	500 V/6 kV/3 ❶	300 V, 20 A
I_N 32 A ❷	300 V, 20 A	I_N 32 A ❷	300 V, 20 A	I_N 32 A ❷	300 V, 20 A
8 - 9 mm / 0.33 in ❸		8 - 9 mm / 0.33 in ❸		8 - 9 mm / 0.33 in ❸	







Pole No.	Item No.	Pack. Unit
Male connector with CAGE CLAMP® for flying leads, gray		
2	**769-602**	100
3	**769-603**	100
4	**769-604**	100
5	**769-605**	50
6	**769-606**	50
7	**769-607**	25
8	**769-608**	25
9	**769-609**	25
10	**769-610**	25
11	**769-611**	25
12	**769-612**	25
13	**769-613**	25
14	**769-614**	15
15	**769-615**	10

Pole No.	Item No.	Pack. Unit
Male connector with CAGE CLAMP® and snap-in mounting feet, for plate thickness 0.6-1.2 mm, fixing hole 3.5 mm Ø, with 209-137 mounting adapter for DIN 35 rail, gray		
2	**769-602/001-000**	100
3	**769-603/001-000**	100
4	**769-604/001-000**	50
5	**769-605/001-000**	50
6	**769-606/001-000**	50
7	**769-607/001-000**	25
8	**769-608/001-000**	25
9	**769-609/001-000**	25
10	**769-610/001-000**	25
11	**769-611/001-000**	25
12	**769-612/001-000**	25
13	**769-613/001-000**	15
14	**769-614/001-000**	15
15	**769-615/001-000**	20

Pole No.	Item No.	Pack. Unit
Male connector with CAGE CLAMP® and fixing flanges, for screw or similar mounting types, for vertical or horizontal mounting, gray		
2	**769-602/002-000**	100
3	**769-603/002-000**	50
4	**769-604/002-000**	50
5	**769-605/002-000**	50
6	**769-606/002-000**	50
7	**769-607/002-000**	25
8	**769-608/002-000**	25
9	**769-609/002-000**	25
10	**769-610/002-000**	25
11	**769-611/002-000**	25
12	**769-612/002-000**	25
13	**769-613/002-000**	15
14	**769-614/002-000**	10
15	**769-615/002-000**	20

Item-Specific Accessories

Strain relief plate,



gray		
2- to 3-pole	**769-411**	100 (4x25)
4- to 5-pole	**769-412**	100 (4x25)
6- to 9-pole	**769-413**	100 (4x25)
10- to 15-pole	**769-414**	100 (4x25)

Item-Specific Accessories

Mounting adapter, for DIN 35 rail,



can be used as end plate, 6.5 mm wide, gray **209-137** 25

Item-Specific Accessories

Fixing screw M 2.5 x 16,



and hexagon nut M 2.5 **769-499** 100 (4x25)

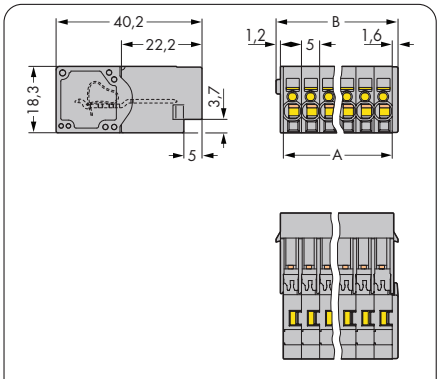

B = A + 3.6 mm
A = No. of poles x pin spacing

Dimensions in mm

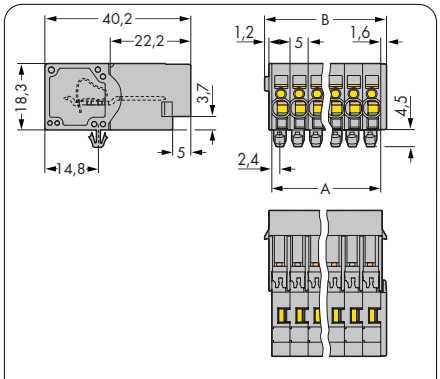

B = A + 3.6 mm
A = No. of poles x pin spacing

Dimensions in mm

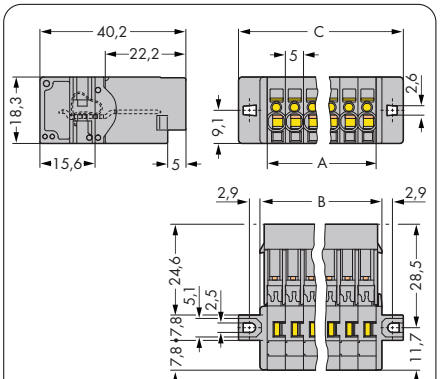

C = A + 15,4 mm
B = A + 3,6 mm
A = No. of poles x pin

Dimensions in mm

For list of approvals and user guide, see pages 634 to 637.