SIEMENS

Data sheet 3SE5000-0AV05



SEPARATE ACTUATOR, UNIVERSAL RADIUS ACTUATOR FOR POS. W. TUMBLER 3SE5312../3SE5322.. AND ASI 3SF13... AND POS. WITH SEPARATE ACTUATOR 3SE51../3SE52.. AND ASI 3SF11../3SF21..

Product designation	actuator
General technical data:	
Vibration resistance	
• acc. to IEC 60068-2-6	0.35 mm/5g
Mechanical service life (switching cycles)	
• typical	1 000 000
Equipment marking	
• acc. to DIN EN 61346-2	T
• acc. to DIN EN 81346-2	T
Active principle	mechanical
Drive Head:	
Design of the operating mechanism	universal actuator
Ambient conditions:	
Ambient temperature	
• during operation	-25 ... +85 °C
• during storage	-40 ... +90 °C
Installation/ mounting/ dimensions:	
mounting position	any
Mounting type	screw fixing
Certificates/ approvals:	

Changes preserved
© Copyright Siemens AG

General Product Approval			Functional Safety/Safety of Machinery	Declaration of Conformity	Test Certificates
CSA	UL	EAC	Type Examination Certificate	EG-Konf.	Special Test Certificate

other

Confirmation

Further information

Information- and Downloadcenter (Catalogs, Brochures,…)
http://www.siemens.com/industrial-controls/catalogs

Industry Mall (Online ordering system)
http://www.siemens.com/industrymall

Cax online generator
http://support.automation.siemens.com/WW/CAXorder/default.aspx?lang=en&mlfb=3SE50000AV05

Service&Support (Manuals, Certificates, Characteristics, FAQs,...)
https://support.industry.siemens.com/cs/ww/en/ps/3SE50000AV05

Image database (product images, 2D dimension drawings, 3D models, device circuit diagrams, EPLAN macros, ...)
http://www.automation.siemens.com/bilddb/cax_de.aspx?mlfb=3SE50000AV05&lang=en

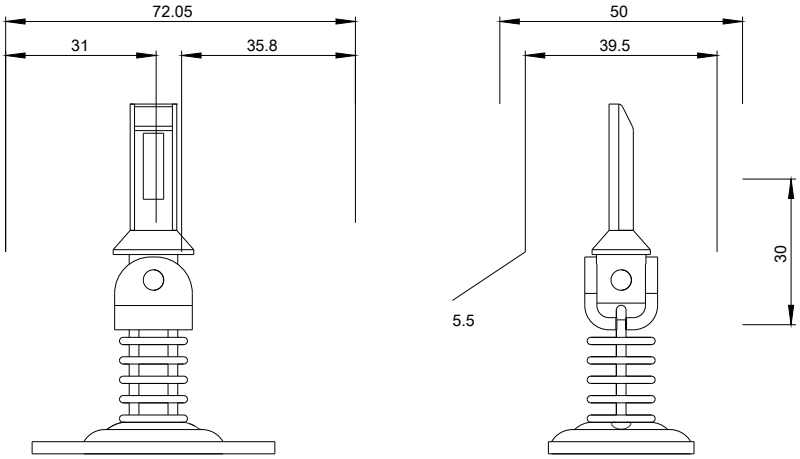

Changes preserved
© Copyright Siemens AG

last modified: 22.05.2015

Changes preserved
© Copyright Siemens AG