SIEMENS

Data sheet 3SE5000-0AK00



PART-TURN ACTUATOR, PLASTIC FOR POSITION SWITCH 3SE52, ADJUSTABLE, WITHOUT LEVER

Product designation	Semi-rotary actuator for position switch
Manufacturer article number	
• of the supplied actuator head for position switches	3SE5000-0AK00
General technical data:	
Vibration resistance	
• acc. to IEC 60068-2-6	0.35 mm/5g
Material of the enclosure of the switch head	plastic
Equipment marking	
• acc. to DIN EN 61346-2	T
• acc. to DIN EN 81346-2	T
Active principle	mechanical
Explosion protection category for dust	none
Explosion protection category for gas	none
Minimum actuating torque in activation direction	0.25 N·m
Enclosure:	
Coating of the enclosure	Other types
Drive Head:	
Design of the operating mechanism	without
Communication/ Protocol:	
Design of the interface	without
Ambient conditions:	
Ambient temperature	
• during operation	-25 ... +85 °C

Changes preserved
© Copyright Siemens AG

• during storage	-40 ... +90 °C

Installation/ mounting/ dimensions:

mounting position	any
Mounting type	lockable plug-in fixing

Certificates/ approvals:

General Product Approval	Declaration of Conformity	Test Certificates	other
CSA UL EAC	EG-Konf.	Special Test Certificate	Confirmation

other
Vibration Test Certificates

Further information

Information- and Downloadcenter (Catalogs, Brochures,…)
http://www.siemens.com/industrial-controls/catalogs

Industry Mall (Online ordering system)
http://www.siemens.com/industrymall

Cax online generator
http://support.automation.siemens.com/WW/CAXorder/default.aspx?lang=en&mlfb=3SE50000AK00

Service&Support (Manuals, Certificates, Characteristics, FAQs,...)
https://support.industry.siemens.com/cs/ww/en/ps/3SE50000AK00

Image database (product images, 2D dimension drawings, 3D models, device circuit diagrams, EPLAN macros, ...)
http://www.automation.siemens.com/bilddb/cax_de.aspx?mlfb=3SE50000AK00&lang=en

Changes preserved
© Copyright Siemens AG

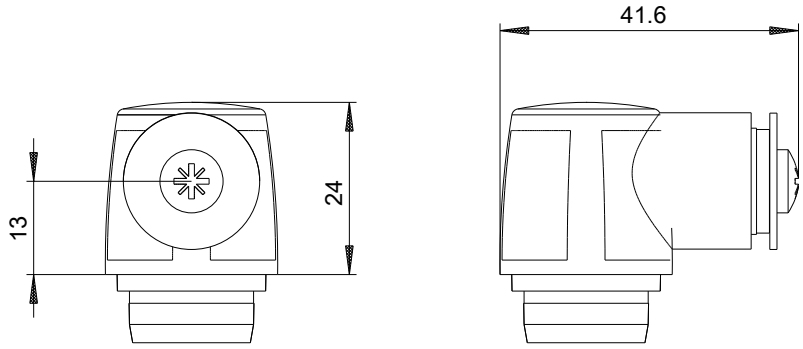

last modified: 22.05.2015

Changes preserved
© Copyright Siemens AG