SIEMENS

## Data sheet 3SE5000-0AD02



ACTUATOR HEAD FOR POSITION SWITCH 3SE51/52 ROLLER PLUNGER, FORM C, WITH STAINLESS STEEL ROLLER 13 MM, TO EN 50041,WITH 3MM OVERTRAVEL

| | |
|---|---|
| **Product designation** | actuator head for position switch |
| **Manufacturer article number** | |
| • of the supplied actuator head for position switches | 3SE5000-0AD02 |

### General technical data:

| | |
|---|---|
| **Product function** | |
| • positive opening | Yes |
| **Vibration resistance** | |
| • acc. to IEC 60068-2-6 | 0.35 mm/5g |
| **Mechanical service life (switching cycles)** | |
| • typical | 15 000 000 |
| **Material of the enclosure of the switch head** | metal |
| **Equipment marking** | |
| • acc. to DIN EN 61346-2 | T |
| • acc. to DIN EN 81346-2 | T |
| **Active principle** | mechanical |
| **Explosion protection category for dust** | none |
| **Explosion protection category for gas** | none |
| **Minimum actuating force in activation direction** | 20 N |

### Enclosure:

| | |
|---|---|
| **Coating of the enclosure** | Other types |

### Drive Head:

| | |
|---|---|
| **Design of the operating mechanism** | Stainless steel roller |
| **Standard-compliant actuator head** | EN 50041, design C |


Changes preserved
© Copyright Siemens AG

| | |
|---|---|
| **Shape of the switch head** | roller |
| **Outer diameter of the switch head** | 13 mm |

## Communication/ Protocol:

| | |
|---|---|
| **Design of the interface** | without |

## Ambient conditions:

| | |
|---|---|
| **Ambient temperature** | |
| • during operation | -25 ... +85 °C |
| • during storage | -40 ... +90 °C |

## Installation/ mounting/ dimensions:

| | |
|---|---|
| **mounting position** | any |
| **Mounting type** | lockable plug-in fixing |

## Certificates/ approvals:

| General Product Approval | | | Declaration of Conformity | Test Certificates | other |
|---|---|---|---|---|---|
| CSA | UL | EAC | EG-Konf. | Special Test Certificate | Confirmation |

### other

Vibration Test Certificates

## Further information

**Information- and Downloadcenter (Catalogs, Brochures,…)**
http://www.siemens.com/industrial-controls/catalogs

**Industry Mall (Online ordering system)**
http://www.siemens.com/industrymall

**Cax online generator**
http://support.automation.siemens.com/WW/CAXorder/default.aspx?lang=en&mlfb=3SE50000AD02

**Service&Support (Manuals, Certificates, Characteristics, FAQs,...)**
https://support.industry.siemens.com/cs/ww/en/ps/3SE50000AD02

**Image database (product images, 2D dimension drawings, 3D models, device circuit diagrams, EPLAN macros, ...)**
http://www.automation.siemens.com/bilddb/cax_de.aspx?mlfb=3SE50000AD02&lang=en


Changes preserved
© Copyright Siemens AG

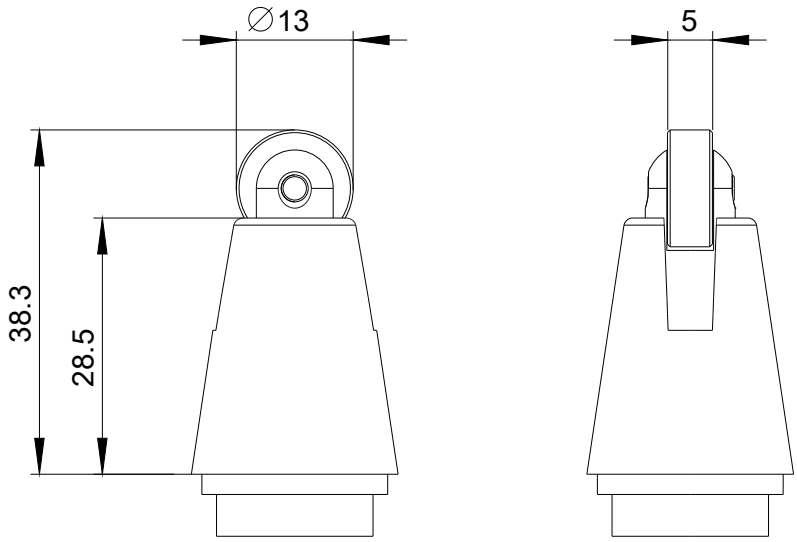


**last modified:** 22.05.2015


Changes preserved
© Copyright Siemens AG