SIEMENS

## Data sheet 3SE5000-0AA51



LENGTH-ADJUSTABLE TWIST LEVER FOR POSITION SWITCH 3SE51/52 METAL LEVER 100MM LONG STAINLESS STEEL ROLLER 19MM

| | |
|---|---|
| **Product designation** | actuator for part-turn actuator |
| **Manufacturer article number** | |
| • of the supplied operating lever | 3SE5000-0AA51 |

| General technical data: | |
|---|---|
| **Product function** | |
| • positive opening | No |
| **Vibration resistance** | |
| • acc. to IEC 60068-2-6 | 0.35 mm/5g |
| **Mechanical service life (switching cycles)** | |
| • typical | 15 000 000 |
| **Equipment marking** | |
| • acc. to DIN EN 61346-2 | T |
| • acc. to DIN EN 81346-2 | T |
| **Active principle** | mechanical |
| **Explosion protection category for dust** | none |
| **Explosion protection category for gas** | none |

| Enclosure: | |
|---|---|
| **Coating of the enclosure** | Other types |

| Drive Head: | |
|---|---|
| **Design of the operating mechanism** | metal lever, adjustable length, stainless steel roller 19 mm |
| **Shape of the switch head** | roller |
| **Outer diameter of the switch head** | 19 mm |

| Communication/ Protocol: | |
|---|---|
| **Design of the interface** | without |


Changes preserved
© Copyright Siemens AG

## Ambient conditions:

| | |
|---|---|
| **Ambient temperature** | |
| • during operation | -25 ... +85 °C |
| • during storage | -40 ... +90 °C |

## Installation/ mounting/ dimensions:

| | |
|---|---|
| **mounting position** | any |
| **Mounting type** | screw fixing |

## Certificates/ approvals:

| General Product Approval | | | Declaration of Conformity | Test Certificates | other |
|---|---|---|---|---|---|
| CSA | UL | EAC | EG-Konf. | Special Test Certificate | Confirmation |

## Further information

**Information- and Downloadcenter (Catalogs, Brochures,…)**
http://www.siemens.com/industrial-controls/catalogs

**Industry Mall (Online ordering system)**
http://www.siemens.com/industrymall

**Cax online generator**
http://support.automation.siemens.com/WW/CAXorder/default.aspx?lang=en&mlfb=3SE50000AA51

**Service&Support (Manuals, Certificates, Characteristics, FAQs,...)**
https://support.industry.siemens.com/cs/ww/en/ps/3SE50000AA51

**Image database (product images, 2D dimension drawings, 3D models, device circuit diagrams, EPLAN macros, ...)**
http://www.automation.siemens.com/bilddb/cax_de.aspx?mlfb=3SE50000AA51&lang=en


Changes preserved
© Copyright Siemens AG

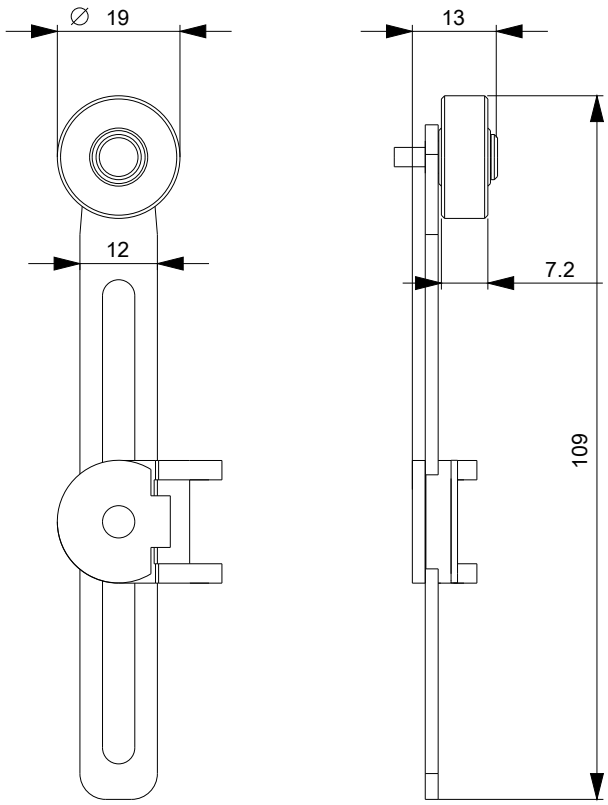


**last modified:** 22.05.2015


Changes preserved
© Copyright Siemens AG